LOGOSOL

USER MANUAL

ORIGINAL USER MANUAL.

SKU 0458-395-5441

REV:3

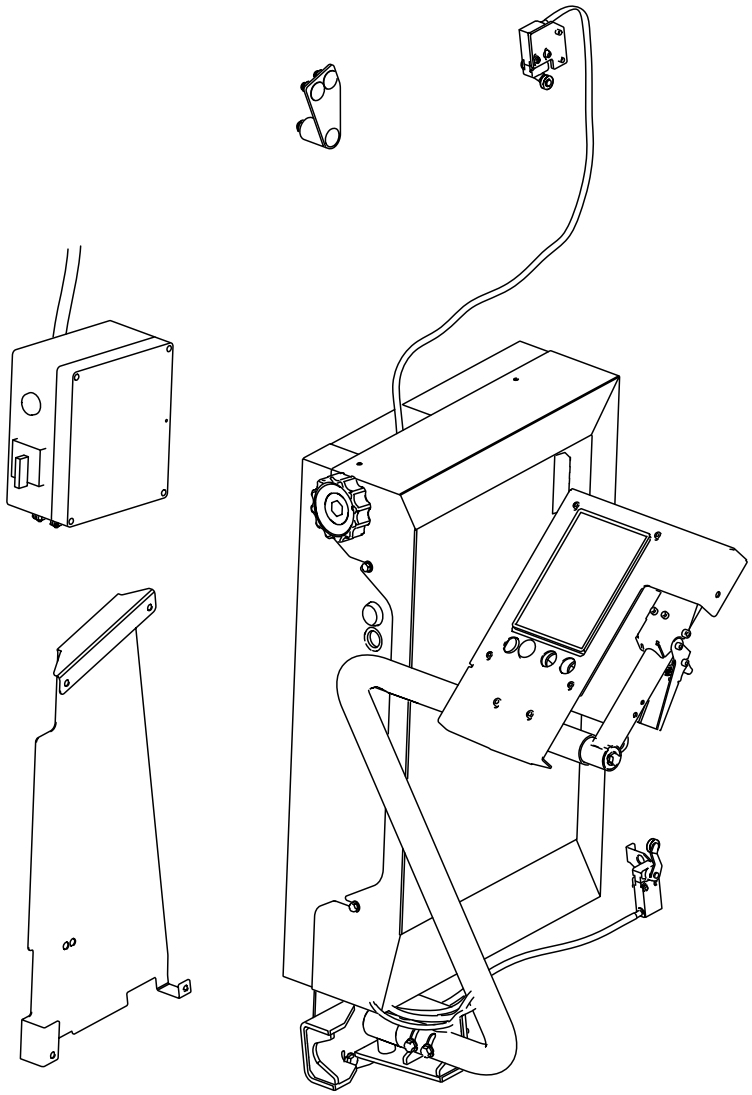

EASY SET / PRO SET

FOR ELECTRIC MOTOR

EN

THANK YOU FOR CHOOSING A LOGOSOL MACHINE!

We are grateful for the confidence you have shown in us by purchasing this product, and we will do our utmost to live up to your expectations.

LOGOSOL has been manufacturing sawmills since 1989, and since then we have supplied around 50,000 machines to satisfied customers the world over.

We care about your safety and want to ensure that you achieve the best possible results. We therefore recommend that you take the time to carefully read this user manual before you begin using the machine.

We hope your new product brings you much satisfaction.

Bengt-Olov Byström
Founder,
Logosol in Härnösand, Sweden

Read through the user manual carefully and make sure you understand its contents before using the saw.

This user manual contains important safety instructions.

WARNING! Incorrect use can result in serious or fatal injuries to the operator or others.

LOGOSOL continuously develops its products.
For this reason, we must reserve the right to modify the configuration and design of our products.

Document: Easy Set / Pro Set user manual
Manual, SKU: 0458-395-5441
Last revised: March 2024
© 2024 LOGOSOL, Härnösand Sweden

TABLE OF CONTENTS

Safety instructions	4
Maintenance	6
Technical specification	7
Component parts: on delivery	9
Preparatory work for a retrofit	14
Easy Set installation	16
Pro Set installation	30
Arm height adjustment	35
Troubleshooting guide	35
First start-up	36
Drilling template for limit switch	37
Machine declaration	40

SAFETY INSTRUCTIONS

KEY TO SYMBOLS

WARNING! This symbol means that you have to take particular care. It is always accompanied by information on the specific risk.

ATTENTION. A warning comes after this symbol. Pay particular attention where this symbol appears in the manual text.

For your own safety and that of others, do not use the machine or handle the cutting equipment without having read and understood the entire contents of this manual.

WARNING! Cutting tools: Incorrect use of the machine may lead to life-threatening injuries. The cutting equipment is extremely sharp and dangerous.

Always wear safety gloves (Class 1) when assembling and working with the machine or handling the cutting equipment. Risk of cutting injuries when handling cutting equipment and sharp plates. The cutting equipment and motor components may be hot after use.

Always wear approved hearing protection when using the machine. Even brief exposure to high frequency noise can damage your hearing. Always wear tightly fitting goggles when working with the machine or handling the cutting equipment. It may also be necessary to wear a protective mask under certain circumstances. This applies especially if you are sawing dry wood or indoors.

Always wear approved chainsaw safety shoes with steel toecaps and non-slip soles when working with the machine or handling cutting equipment.

Always wear full-length chainsaw work trousers when working with the machine or handling the cutting equipment. Never wear loose clothing, scarves, necklaces, etc. that could get caught in the machine during operation. Tie up long hair before using the machine.

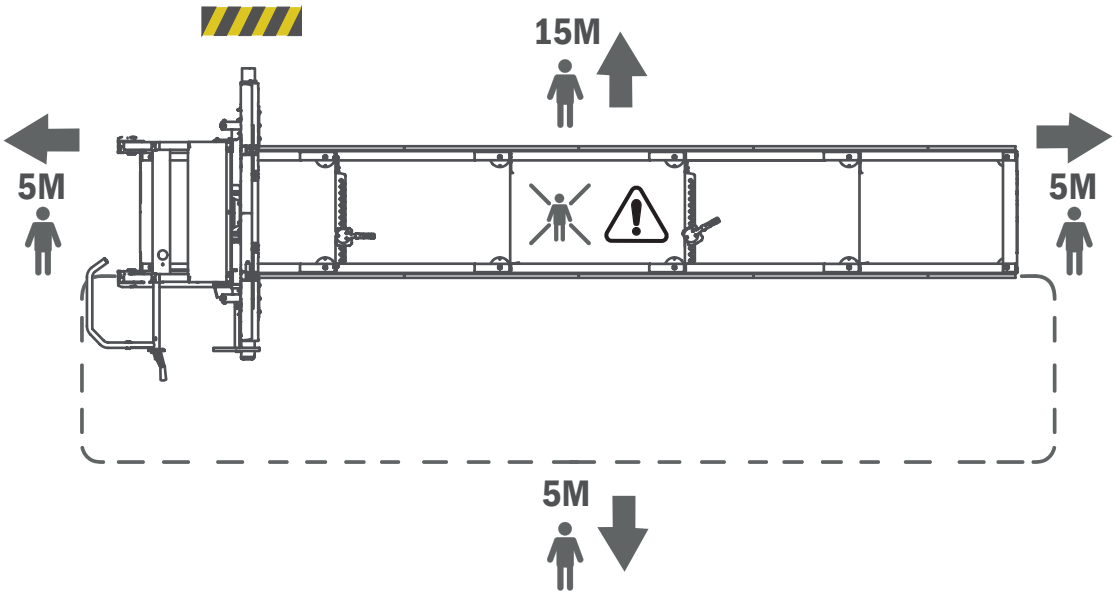

SAFETY INSTRUCTIONS

Read carefully through the entire manual before putting the machine into operation. Failure to observe these safety instructions may result in fatal injuries.

Make sure everyone who uses the machine is well informed of the hazards and has read the manual. The manual must always be accessible when the machine is in use. This also applies if the machine is loaned out or sold.

Persons under the age of 18 are not allowed to use the machine.

WARNING! The machine operator must be fit, healthy and well rested. Schedule regular breaks. Do not work under the influence of alcohol, drugs or medicines that may cause drowsiness or inattentiveness.

The machine should only be used where there is good visibility. Do not work in the dark or where visibility is poor.

WARNING! Should any form of disturbance occur, stop work immediately, switch off the machine and investigate the problem. Always keep this in mind. Most accidents with dangerous machines occur when the operator tries to remedy a problem when the machine is running. A break in operations seldom shows in the finished product.

WARNING! Cutting tool: Always stand in the operator's position and keep both hands on operating levers when operating the machine. Never stand in front of the machine during operation.

WARNING! Rotating parts, entrapment hazard: The operator must always make sure no one is in the machine's hazard area during operation

WARNING! Never modify this machine such that it no longer conforms to the original configuration. When adding extra equipment, use only LOGOSOL manufactured products or those expressly approved by LOGOSOL for the purpose.

Make sure the machine is properly assembled in line with the enclosed assembly instructions and is maintained according to said instructions.

Never work alone. Always make sure there is another adult within earshot in case you need to call for help.

Avoid standing between the log pile and the machine. Always stand to the side of the log pile when handling the logs. Never stand anywhere there is a risk of a log falling on you.

MAINTENANCE

Scheduled machine maintenance intended for performance by the operator is described in this section. Adhere strictly to the specified maintenance intervals, as these form the basis for good function of the sawmill.

LUBRICATION POINTS

Make sure the machine lift and feed chains, where fitted, are lubricated at regular intervals. Also check and lubricate the machine's other mechanical parts.

In order to keep your sawmill in good condition for many years and ensure problem-free ownership, it is important to lubricate the sawmill's components as described below. Lubrication must be carried out:

- Immediately after assembly and before starting to use the sawmill.
- Every 50 hours of operation, but at least once a year.

Saw head lifting chains and chain transmission
Lubricant: Superflo (item no.: 9999-000-5115). Lubricate the entire chain.

Refer to the manual for your band sawmill for other lubrication points.

MAINTENANCE

- Check the tension of the various chain linkages
- Check that the limit switches are intact and functioning
- Check that the machine's speed controller is functional and that the motor cannot be started with the lock engaged.
- Check the condition of the chain sprocket on the height adjustment mechanism.
- Check the condition of the bearings on the height adjustment mechanism

OPERATING INSTRUCTIONS

For operating instructions, refer to the manual for your band sawmill.

BEFORE START-UP

Check that the value shown in the display matches the position of the saw head and calibrate as necessary. Read more in the functions section.

END POSITION FEED / HEIGHT SETTING

Remember to take care when approaching the electric supply / height setting's end position.

STORING THE EQUIPMENT

Remove the control box from the machine between sawing sessions and store it indoors.

CONNECTING ELECTRICAL EQUIPMENT

High-voltage electrical equipment may only be installed and connected by a qualified electrician! Otherwise there is a risk of fire or electric shock!

TECHNICAL SPECIFICATION

Weight: 100 kg
Electrical system: 400 V

INFORMATION ON THE COMPUTER SETWORKS

This manual includes a general description of the computer setworks in the *First start-up* section.
Refer to separate documentation for more detailed information about the computer setworks:
"Pro Set – Computer Setworks".

NUTS AND BOLTS

Definition of the fasteners on following pages.

Shoulder bolt

Cross screw

Slotted screw

Locking screw

Hex nut

Flange nut

Flat washer

Allen screw

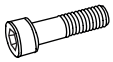
Allen screw (partially threaded)

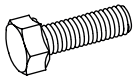
Hex bolt

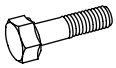
Hex bolt (partially threaded)

Flange screw

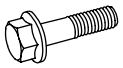
Flange screw (partially threaded)

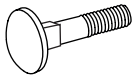
Carriage bolt

ADDITIONAL SYMBOLS

The following symbols are used as supplements to the symbols above to describe the design of the parts.

Low

Tensilock

Lock

Countersunk

DIMENSIONS/LENGTH

Fastener dimensions are shown as diameters (M) ISO 68-1. For bolts, this is followed by a measurement showing how much of the bolt is screwed into the material.

(Diameter)		(Length)
M8	x	20

DELIVERY CHECKS

Before beginning assembly, make sure all the components specified in this manual are included in the packages and that they are unharmed.

BOX-01-00999

1 x – 03-03595

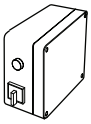

1 x – 01-00839

1 x – 01-00690

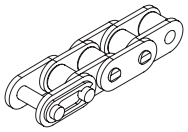

1 x – 01-01005

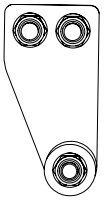

1 x – 01-00894

4 x – M8x12

4 x – M8

01-00999-DIV

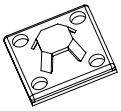

5 x – 6605-001-0320

5 x – 6605-001-0090

BOX-01-00821

1 x – 03-03481

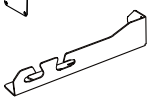

1 x – 02-00548

1 x – 03-03578

01-00821-SKP

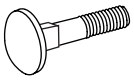

4 x – M8x120

2 x – M5x16

4 x – M6x16

4 x – M6

4 x – M8

BOX-01-00865

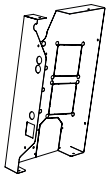

1 x – 03-03538

1 x – 03-03539

2 x – 03-03572

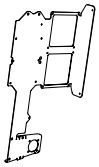

1 x – 03-03468

01-00865-SKP

8 x – M6x10

6 x – M6

4 x – M6x12

4 x – 04-00708

BOX-01-00832

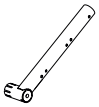

1 x – 02-00541

1 x – 03-03505

1 x – 9037-012-0005

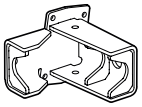

1 x – 02-00542

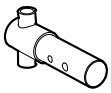

1 x – 02-00543

1 x – 03-03566

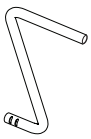

1 x – 03-03567

01-00832-SKP

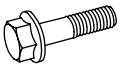

1 x – M10x100

1 x – M10

5 x – M8

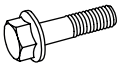

5 x – M8x70

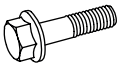

1 x – M8x50

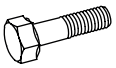

1 x – M8x65

BOX-01-00919

1 x – 03-03556

2 x – 04-00693

1 x – 03-03557

1 x – 03-03558

1 x – 01-00863

01-00919-SKP

2 x – M5x16

2 x – M5x50

2 x – M5

1 x – M6x50

1 x – M6

BOX-01-00897

1 x – 03-03601

1 x – 03-03598

01-00897-SKP

4 x – M4x20

2 x – M6x12

4 x – M4

2 x – M5x16

2 x – M5

BOX-01-00809

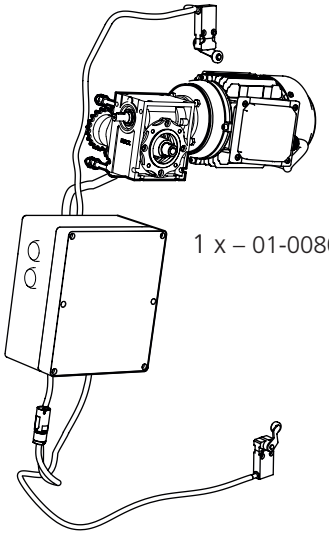

1 x – 01-00809

1 x – 03-03423

1 x – 04-00668

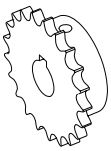

1 x – 03-02282

BOX-01-00900

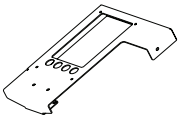

1 x – 03-03507

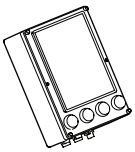

1 x – 01-00899

01-00900-SKP

2 x – M5x45

2 x – M5

1 x – M6

4 x – M6x30

4 x – M4x16

1 x – M6x8

4 x – M4x35

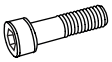

1 x – M6x50

Let’s get started!

We recommend laying out all fasteners on a tray
or similar to make the task easier.

PREPARATORY WORK FOR A RETROFIT

Some disassembly may be necessary before Easy Set / Pro Set installation can begin.

1

Lower the saw head to its bottom position.

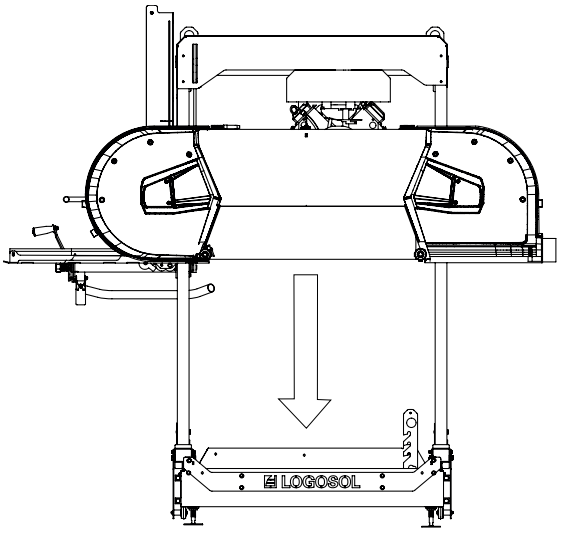

2

Undo the chain tensioner screw and move the tensioner away from the chain to reduce chain tension.

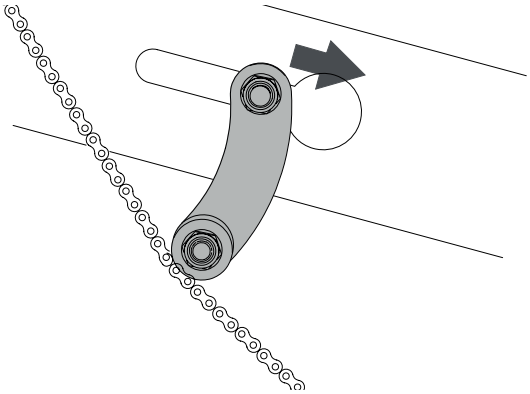

3

Lift the chain away from the lower sprocket.

NB! Make sure the saw head is in the bottom position and that the chain is not tensioned.

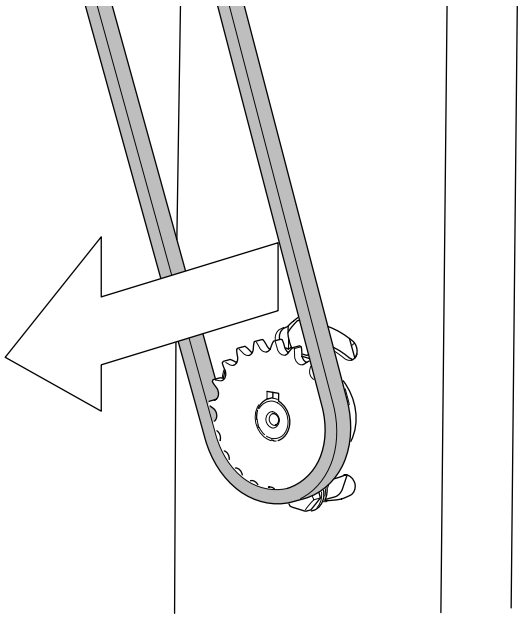

4

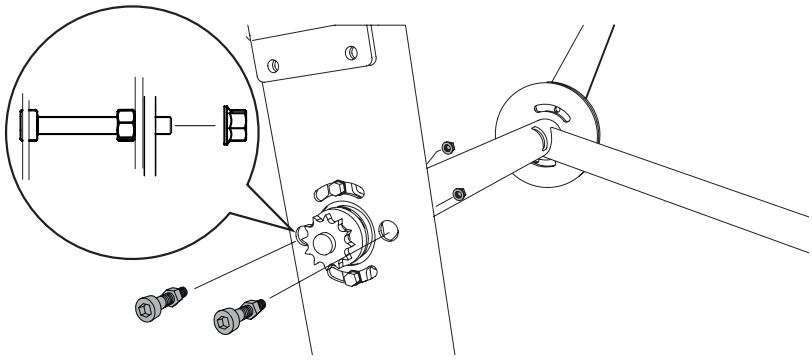

5

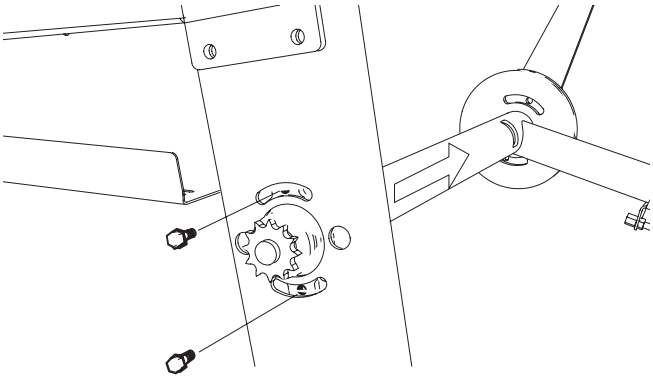

6

Remove the 400V connector

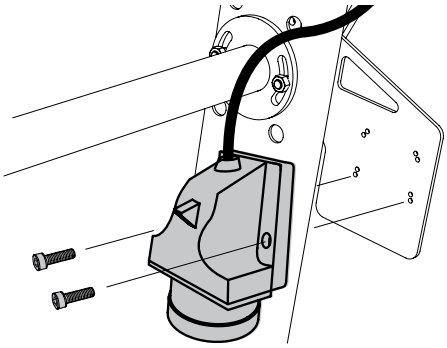

7

In the case of a retrofit, replace the lower saw box. The box is connected to the saw motor and is removed from the motor side. A qualified electrician is required to perform this step.
A circuit diagram for this is included with the new saw box.

See saw box: 01-00839

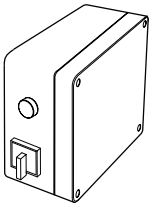

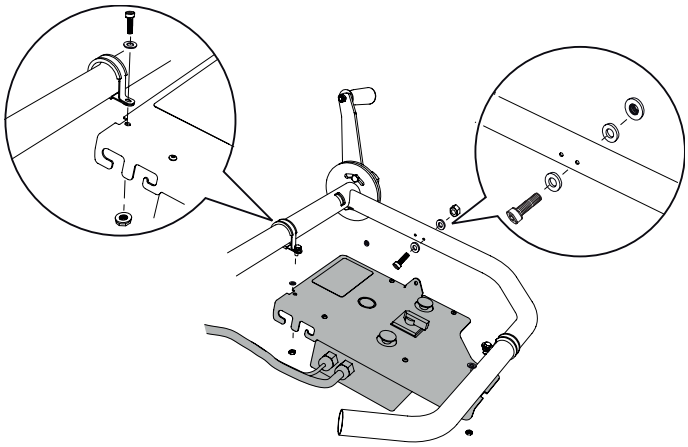

01-00999

The following steps concern Easy Set retrofit installations. Installation involves heavy lifting that may require two people.

WARNING! Heavy! Risk of injury.

Always be two people when lifting heavy objects.

WARNING! Risk of crush injuries.

Wear safety gloves and take care when setting the components down.

ADDITIONAL EQUIPMENT:

There are accessories for this machine that may affect the assembly sequence described in this manual. Read through the assembly instructions in the various manuals before starting work to gain an overview of the different assemblies.

1

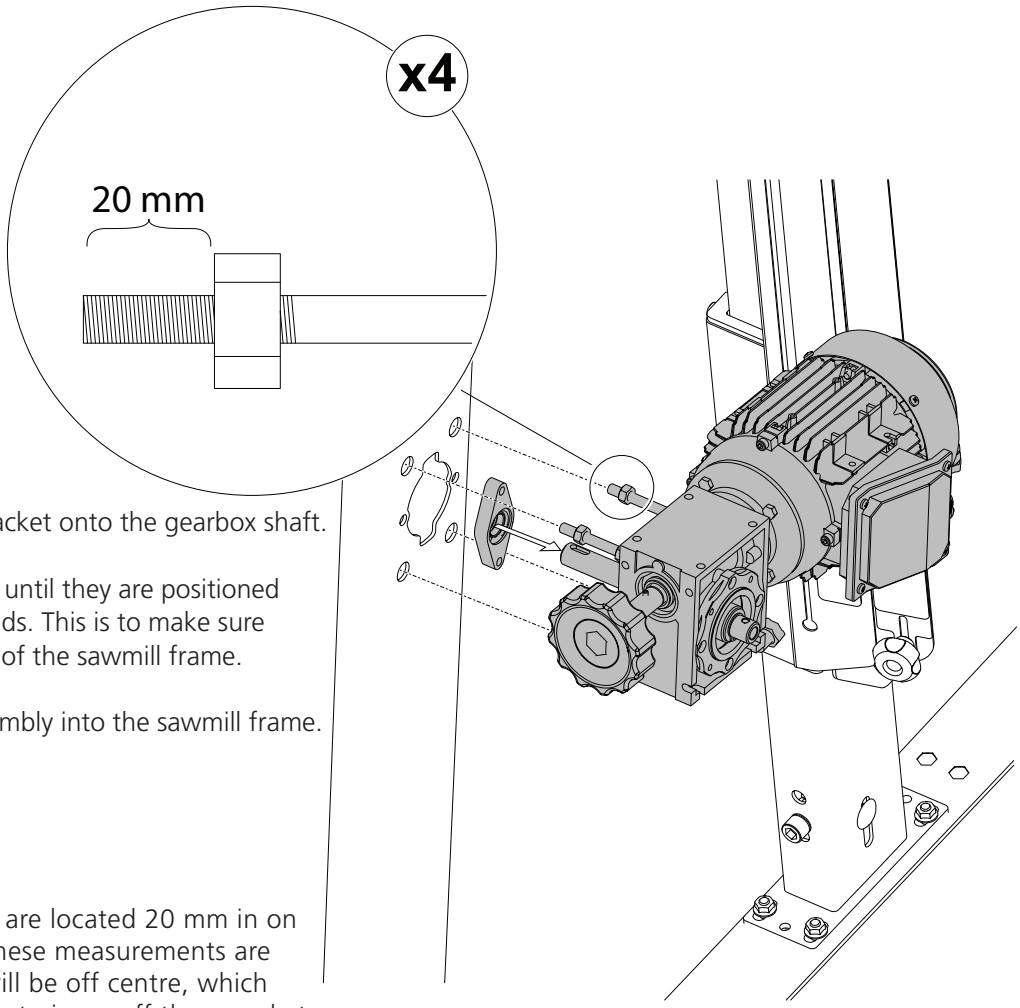

Slide the bearing bracket onto the gearbox shaft.

Adjust the four nuts until they are positioned 20 mm in on the studs. This is to make sure they abut the inside of the sawmill frame.

Slide the motor assembly into the sawmill frame.

Make sure the nuts are located 20 mm in on each stud. Unless these measurements are correct, the shaft will be off centre, which may cause the chain to jump off the sprocket.

2

2 x – M8

2 x – M8x12

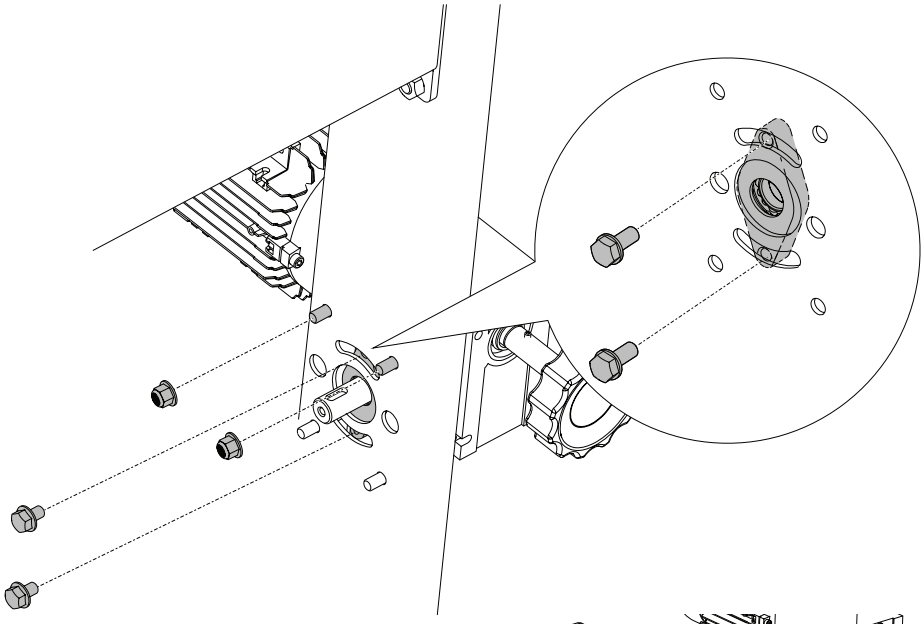

3

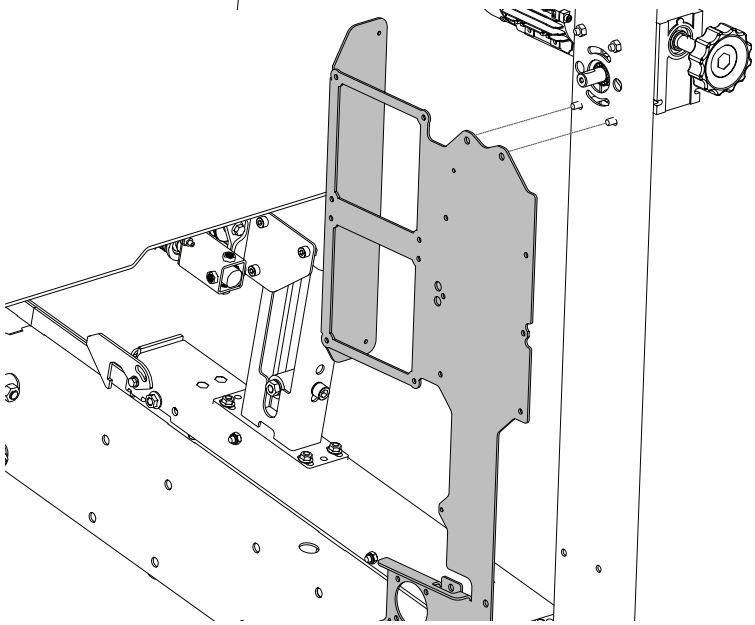

4

2 x – M8

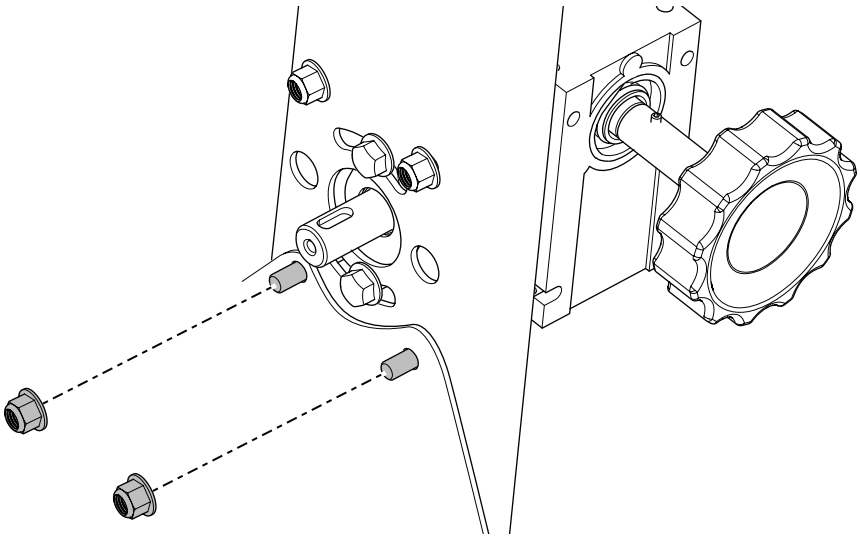

5

Fit the key on the gearbox shaft,
then slide the sprocket onto the shaft.

Adjust sprocket position to align
with the drivetrain's top sprocket.

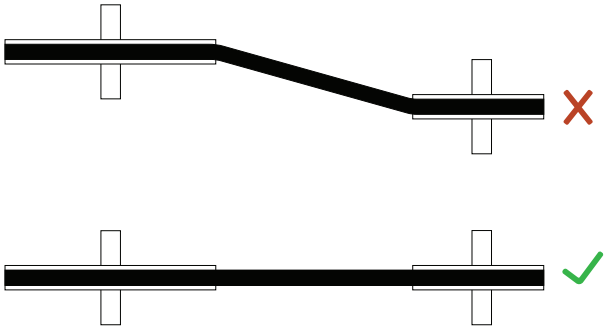

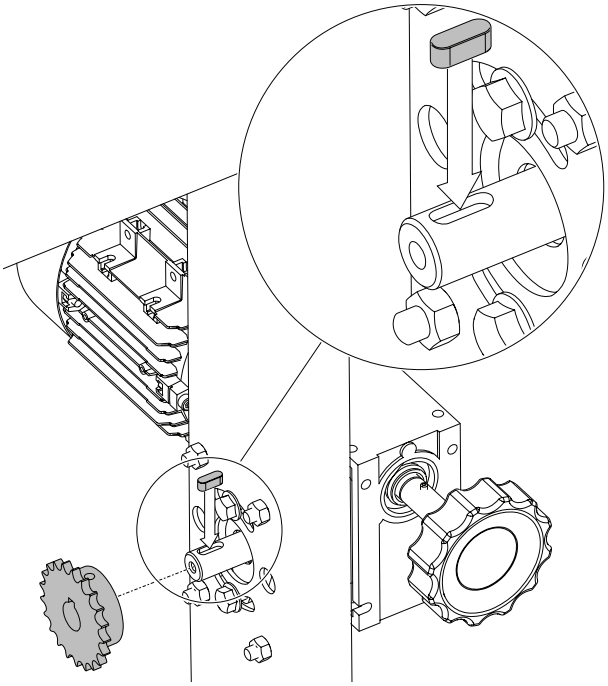

WARNING!
If the chain is not properly aligned,
it may jump off the sprockets. The saw
head will then fall with full force and
may cause injury or material damage.

6

1 x – M6x8

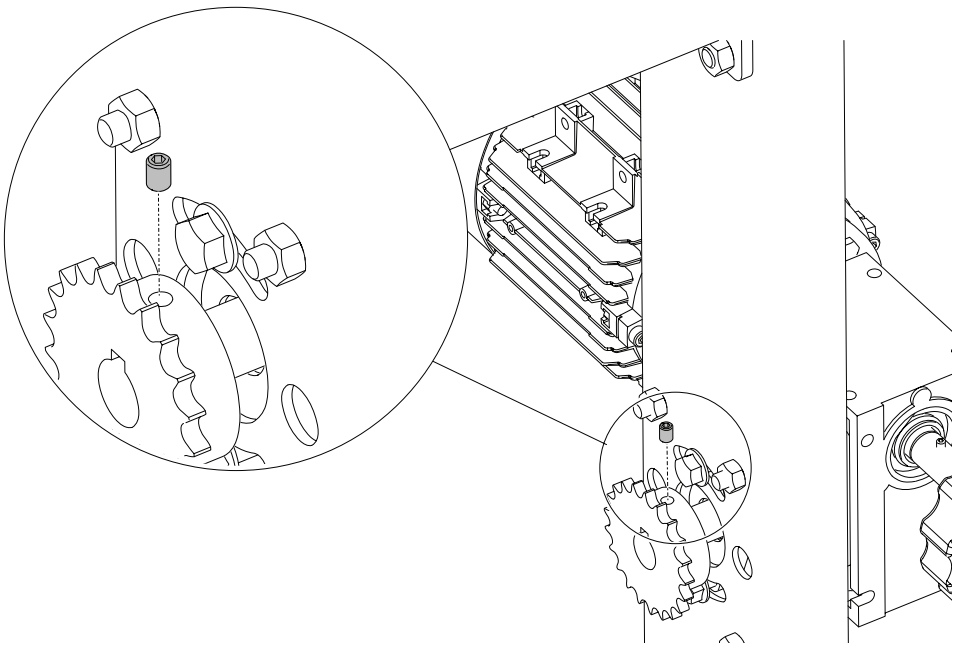

7

There is a chamfer on the position sensor shaft for the setscrew to lock against when it is fitted to the gearbox.

Turn the gearbox knob to align the shaft hole with the position sensor hole.

1 x – M6x8

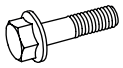

4 x – M6x30

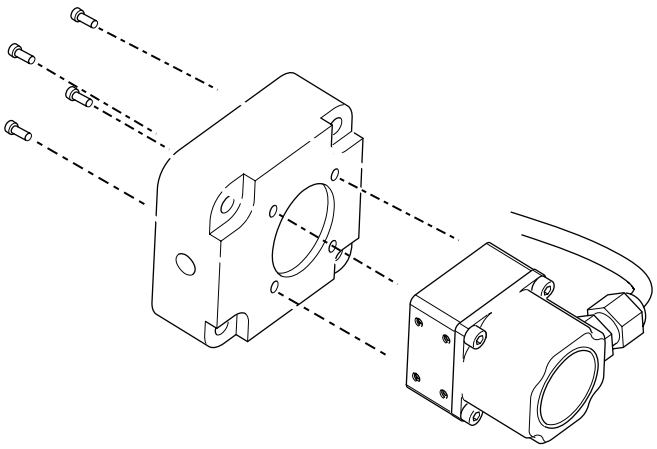

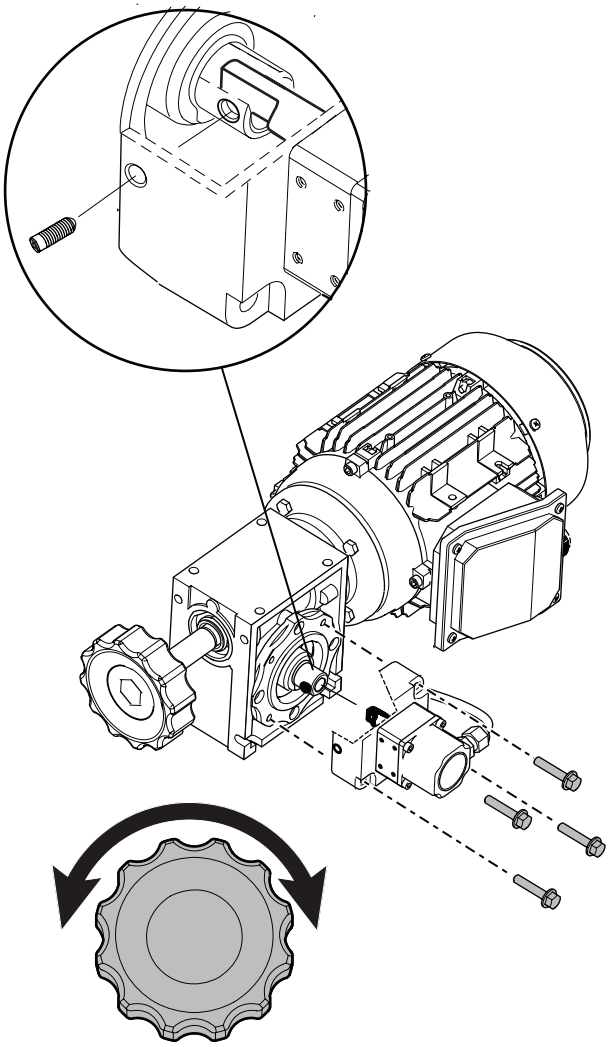

8

6 x – M6x10

6 x – M6

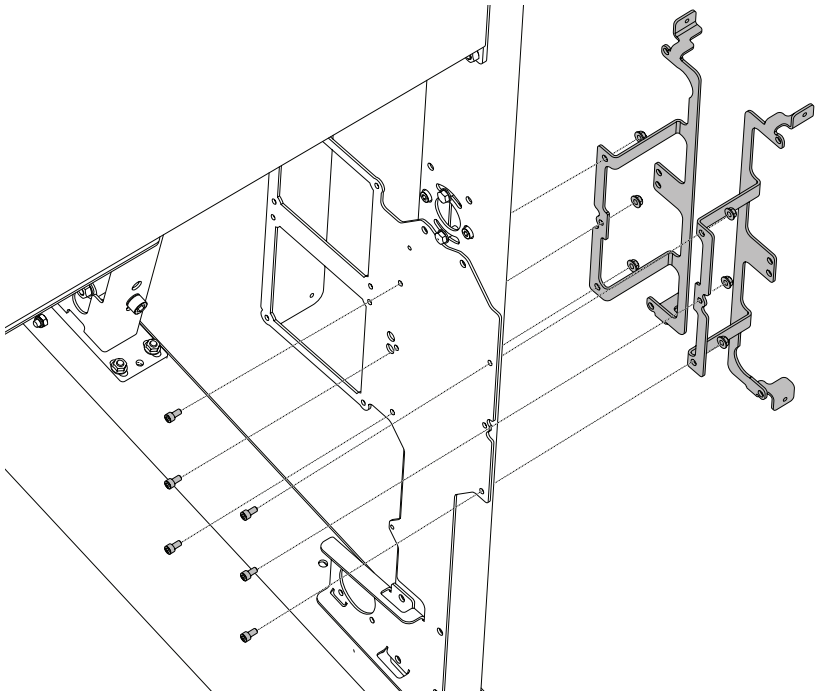

9

WARNING!
High-voltage electrical equipment may only be installed and connected by a qualified electrician! Otherwise there is a risk of fire or electric shock!

In the case of a retrofit, replace the lower saw box. The box is connected to the saw motor. A qualified electrician is required to perform this step. A circuit diagram for this step is included with the new saw box.

Install the two electronics boxes onto the electronics box and cable holders. Secure using eight bolts.

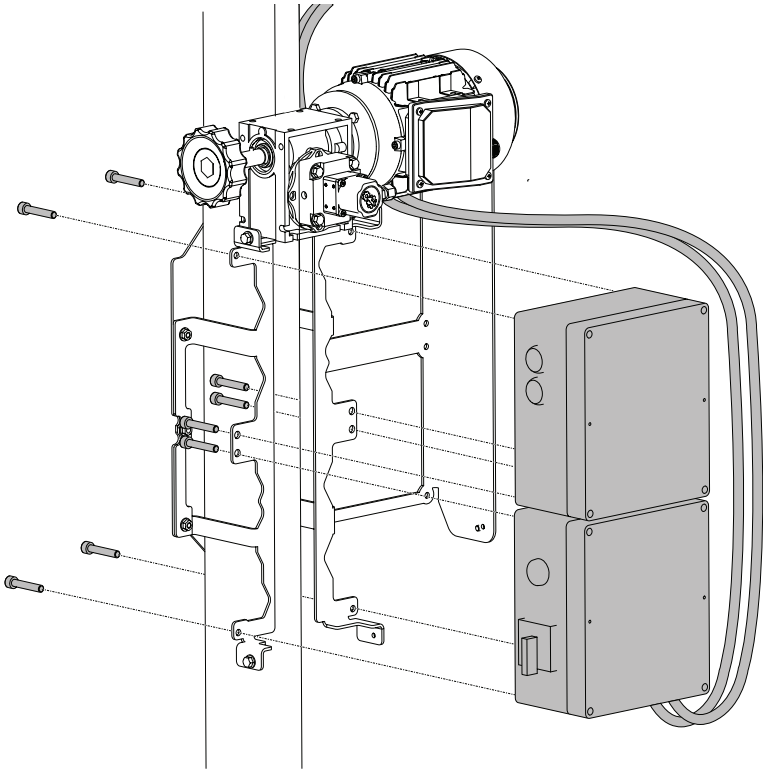

8 x – M6x10

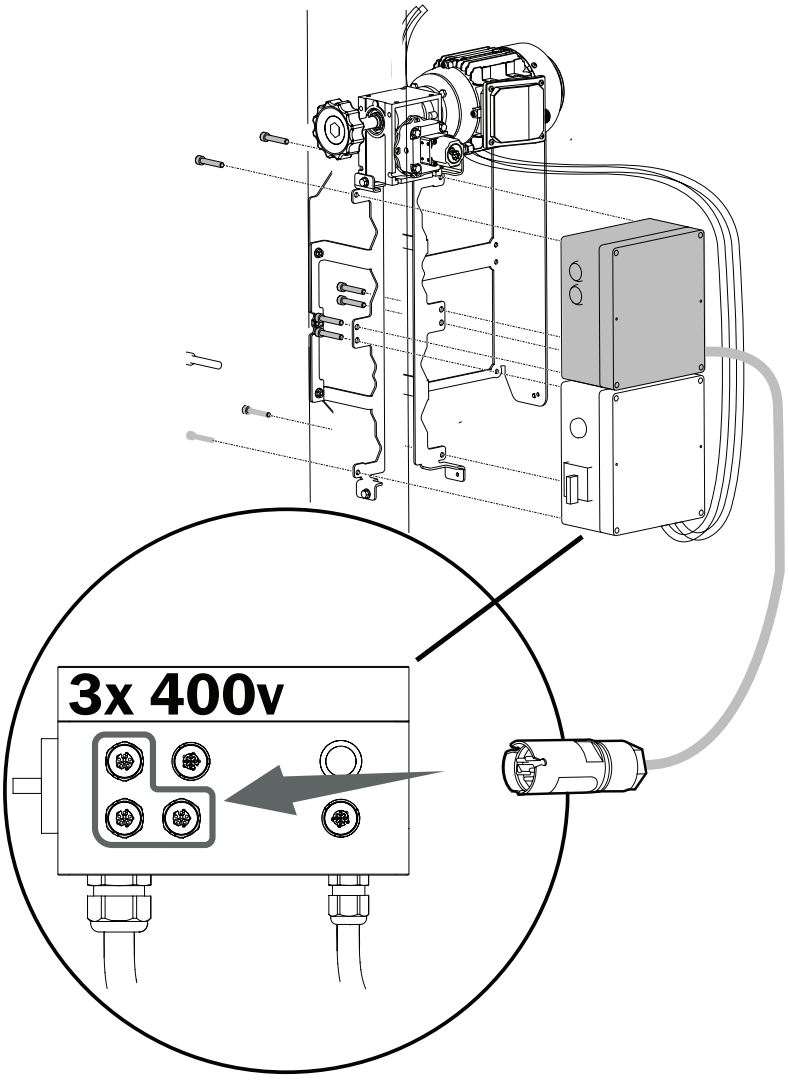

10

4 x – M8x70

4 x – M8

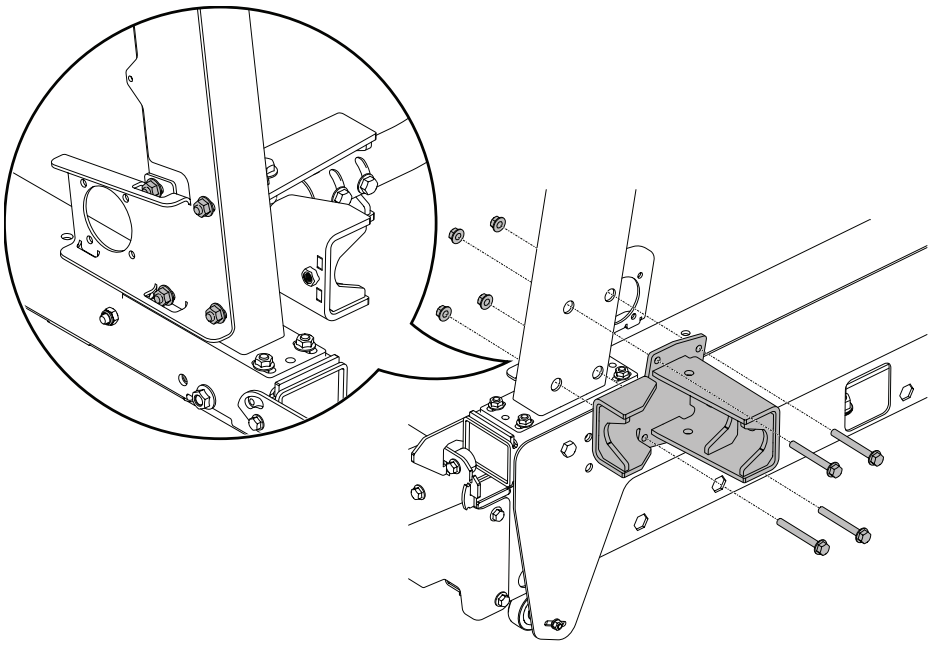

11

Place the arm in the bracket and lock it using a nut and bolt. A lock bolt (B) is included for securing the arm in the bracket. The arm can be locked in a position 90° from the machine, bolt (B). Another option is to turn the arm alongside the machine and lock it in the designated hole.

Arm height is steplessly adjustable. Refer to the *Arm Height Adjustment* chapter.

A 1 x – M8x50

B 1 x – M8x70

C 1 x – M10x100

1 x – M10

1 x – 03-03566

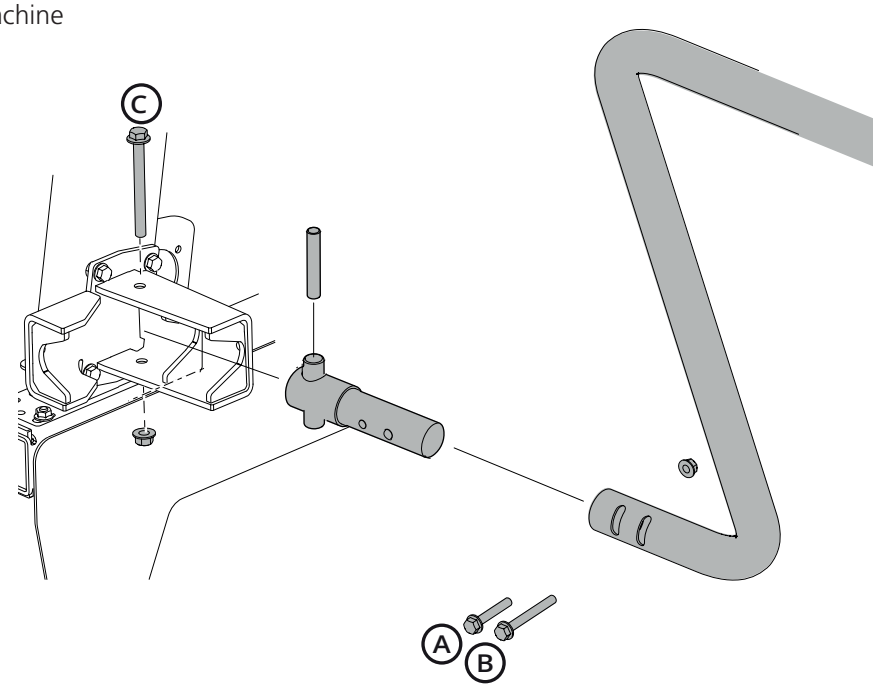

12

1 x – M8x65

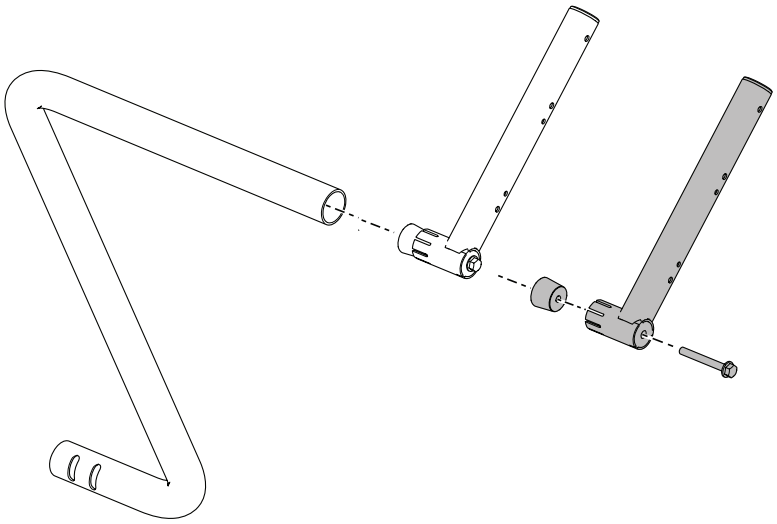

13

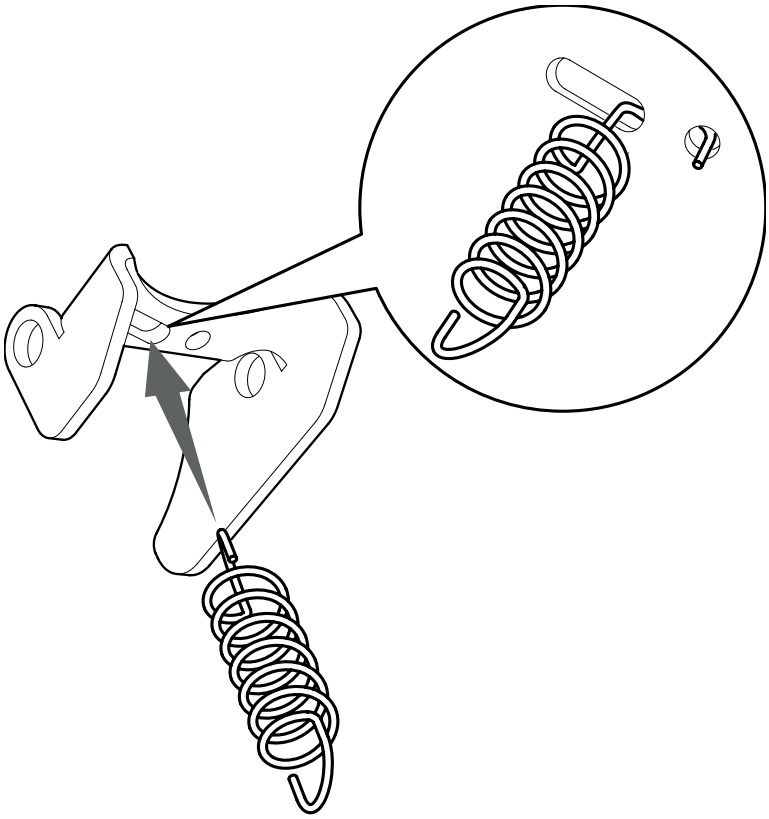

14

1 x – M6x50

1 x – M6

Do not over-tighten the bolts. This may prevent free movement of the handle later.

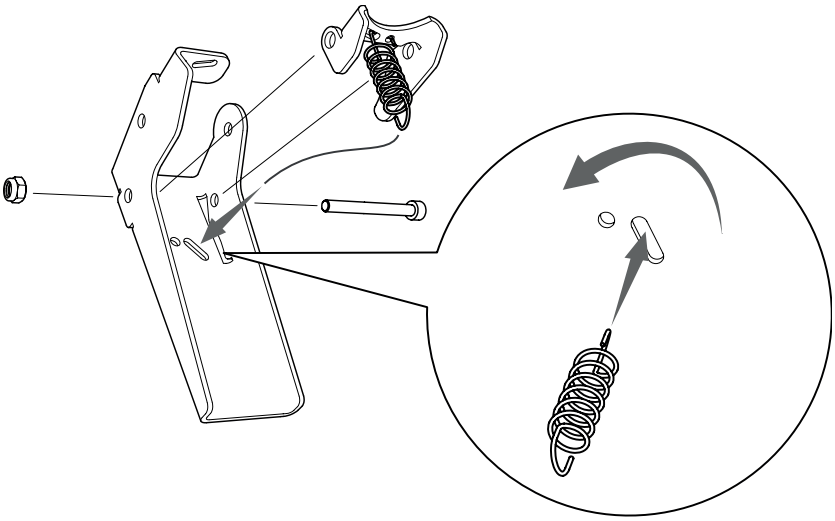

15

2 x – M5x16

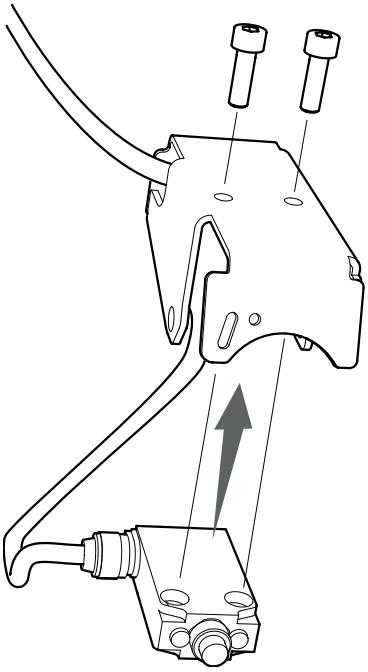

16

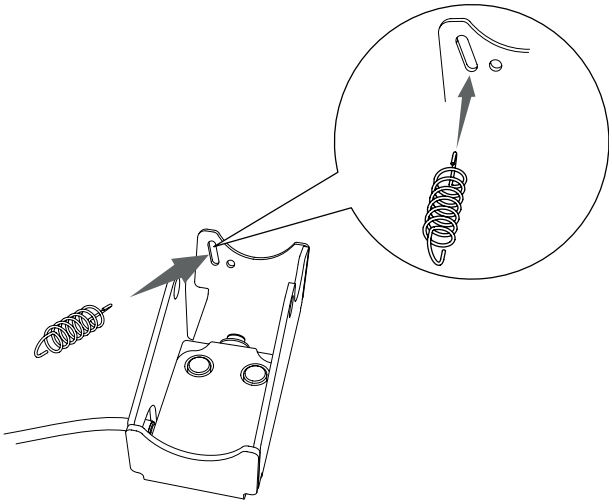

17

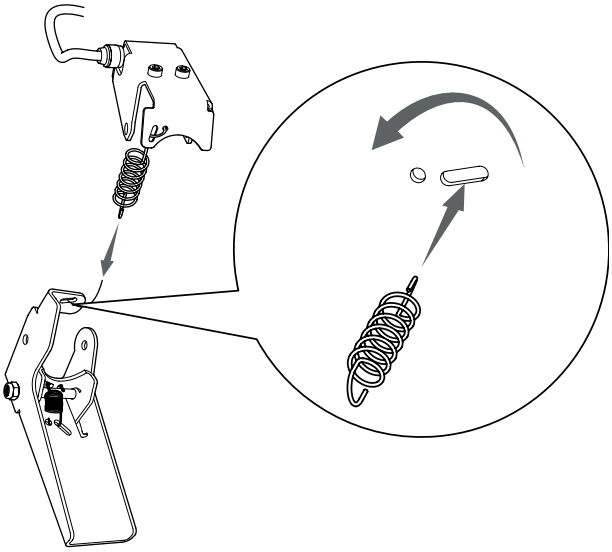

18

1 x – M6x50

1 x – M5x50

1 x – M6

1 x – M5

Do not over-tighten the bottom M5 screw. This may prevent free movement of the handle later.

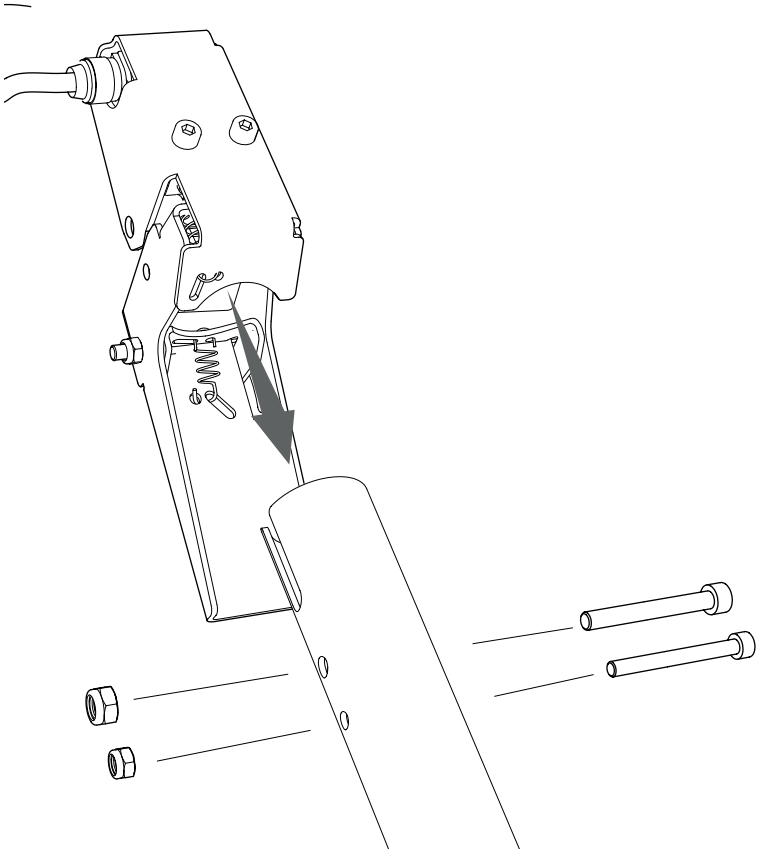

19

2 x – M6x10

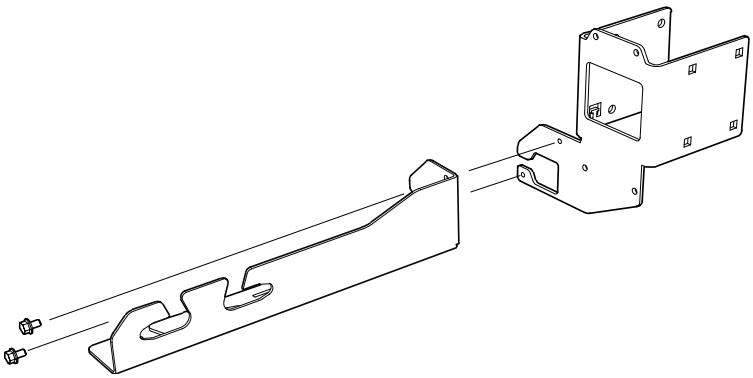

20

4 x – M8x120

4 x – M8

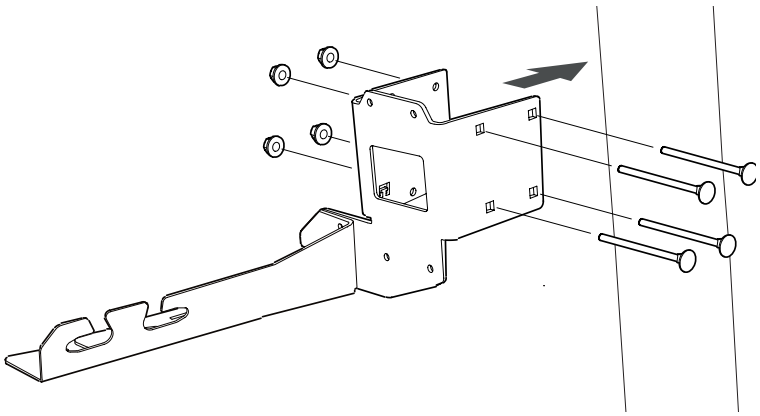

21

A 4 x – M6x16

B 2 x – M5x16

4 x – M6

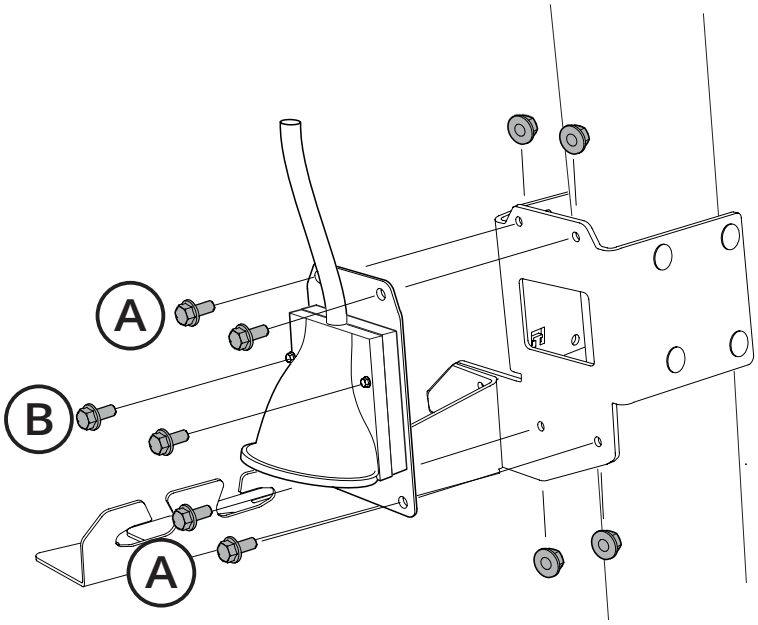

22

9x – 01-00690

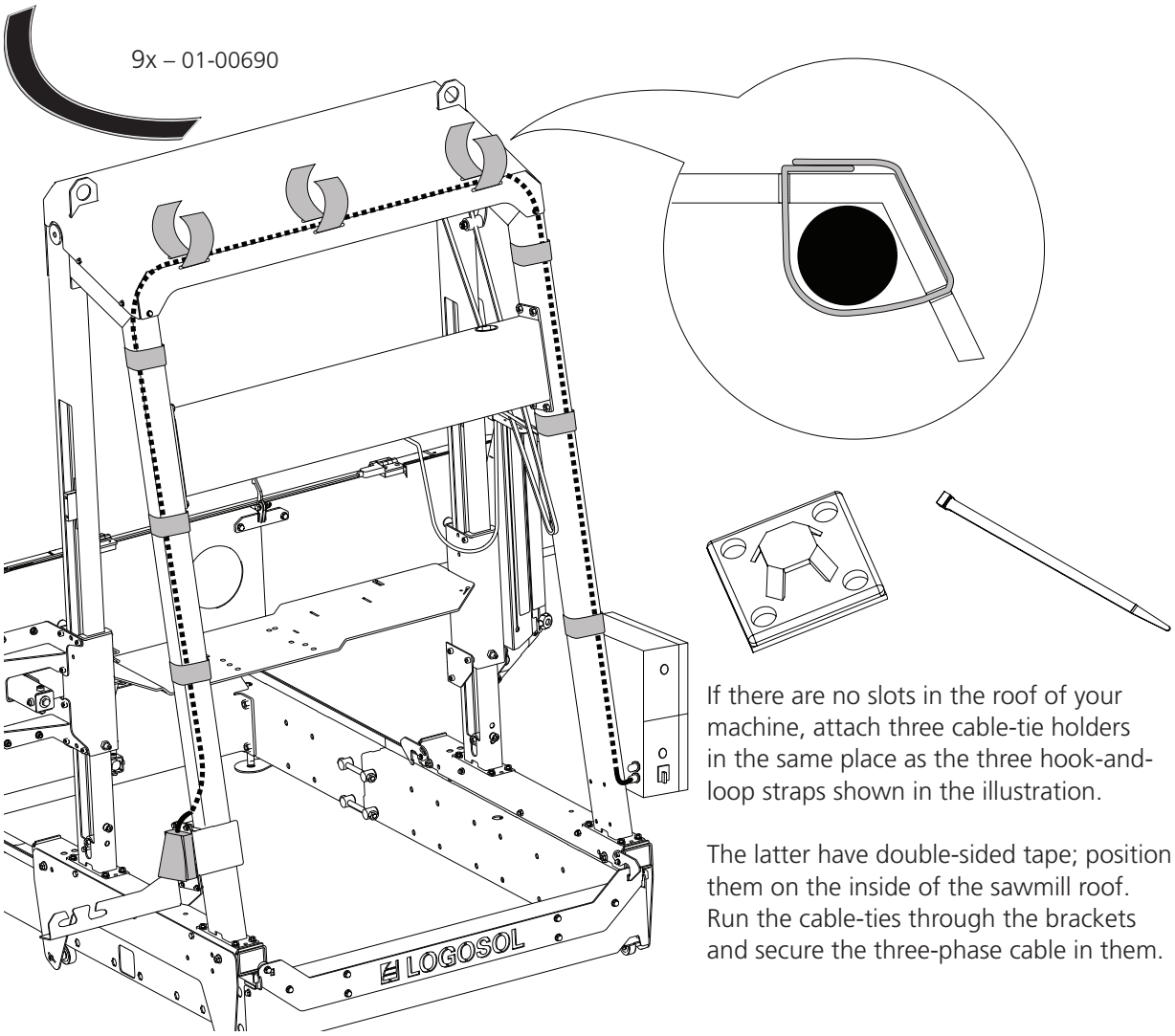

If there are no slots in the roof of your machine, attach three cable-tie holders in the same place as the three hook-and-loop straps shown in the illustration.

The latter have double-sided tape; position them on the inside of the sawmill roof. Run the cable-ties through the brackets and secure the three-phase cable in them.

23

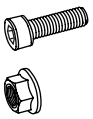

2 x – M4x20

2 x – M4

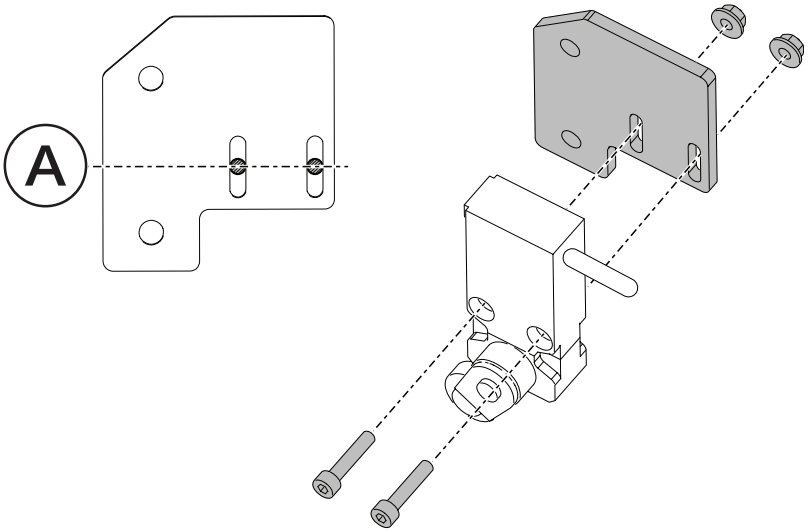

24

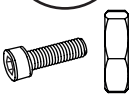

2 x – M6x12

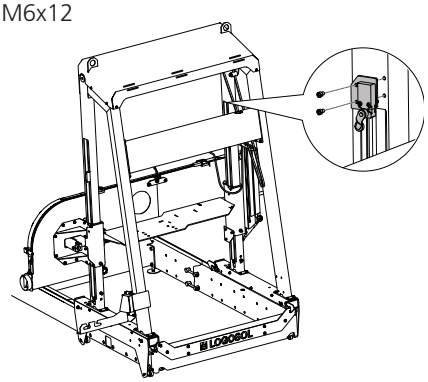

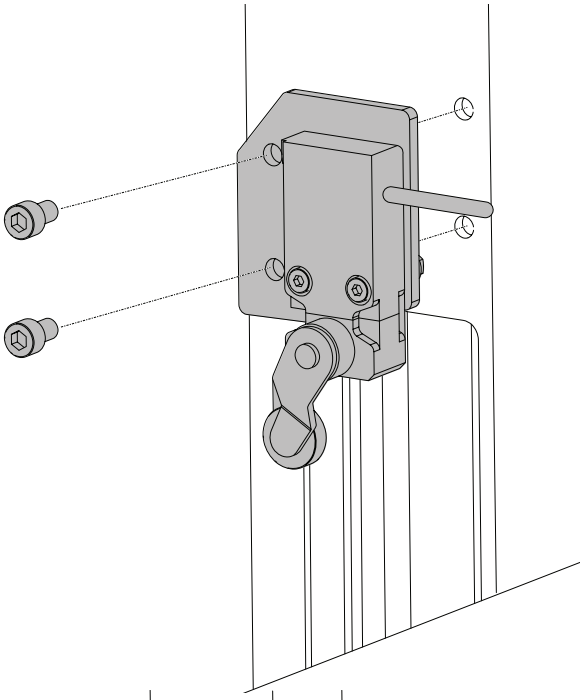

If there are no pre-drilled holes in the frame, a template for this step is available on page 38.

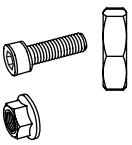

2 x – M5x16

2 x – M5

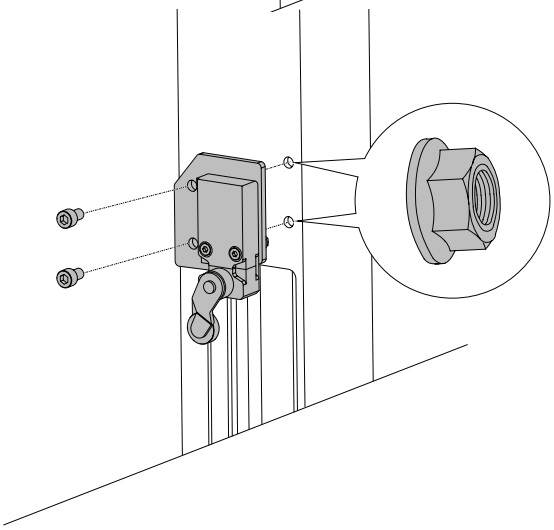

25

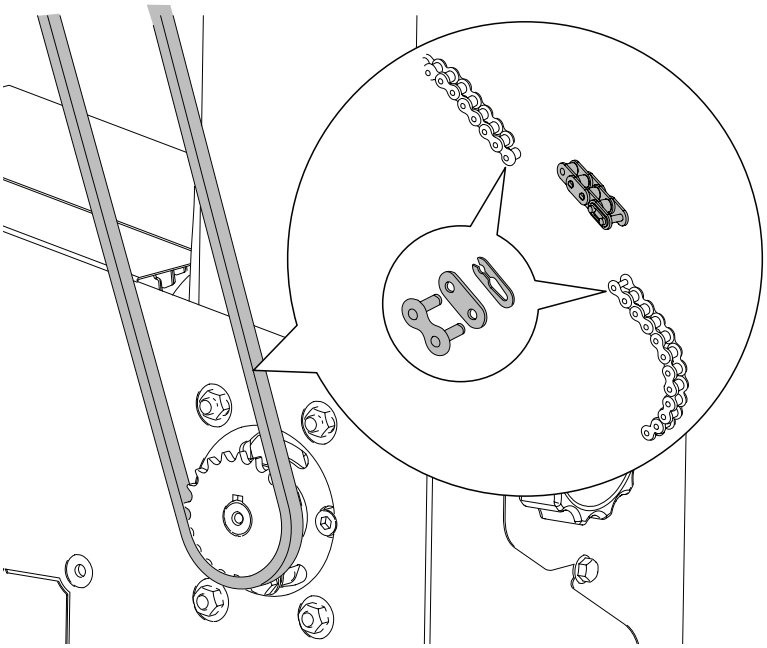

26

2 x – M4x20

2 x – M4

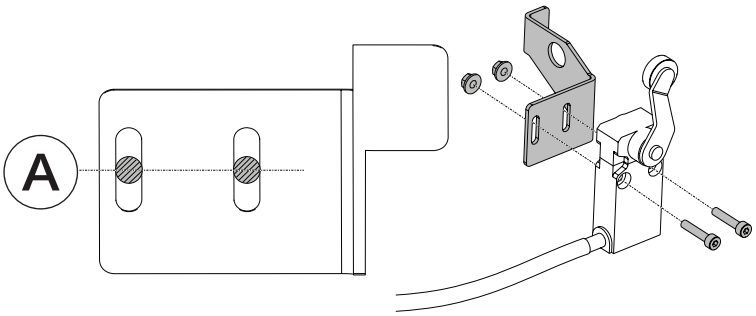

27

Raise the saw head a little to facilitate installation of the lower limit switch.

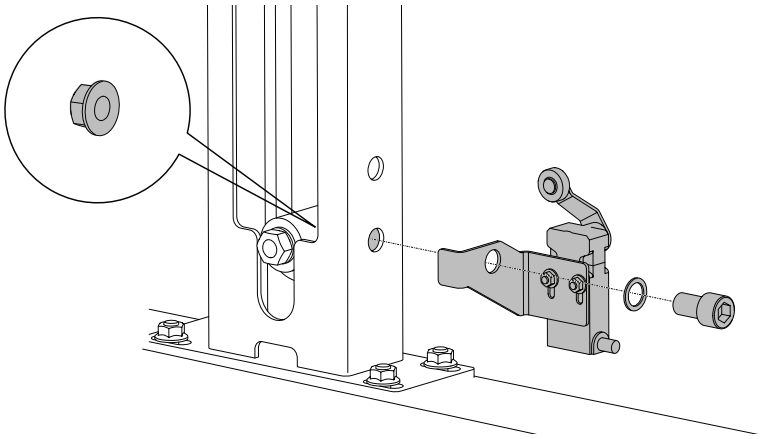

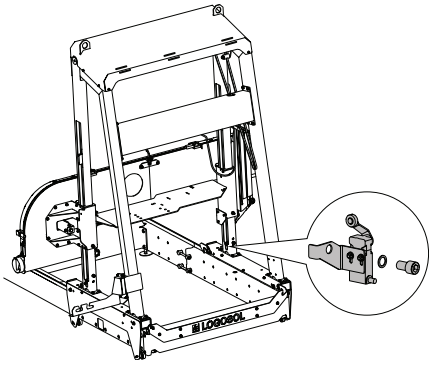

28

This step need only be performed in case of a retrofit. If the machine you are installing on has this chain tensioner, ignore this assembly step.

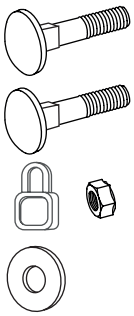

2 x – M10x25

1 x – M10x60

3 x – M10

3 x – M10

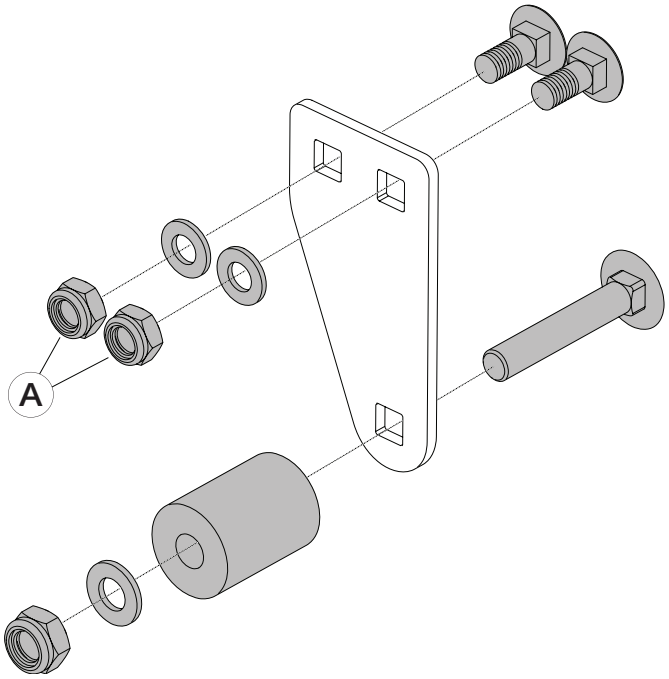

29

Slide the chain tensioner into the upper frame of the sawmill. Do not fully tighten the nuts until the chain is installed.

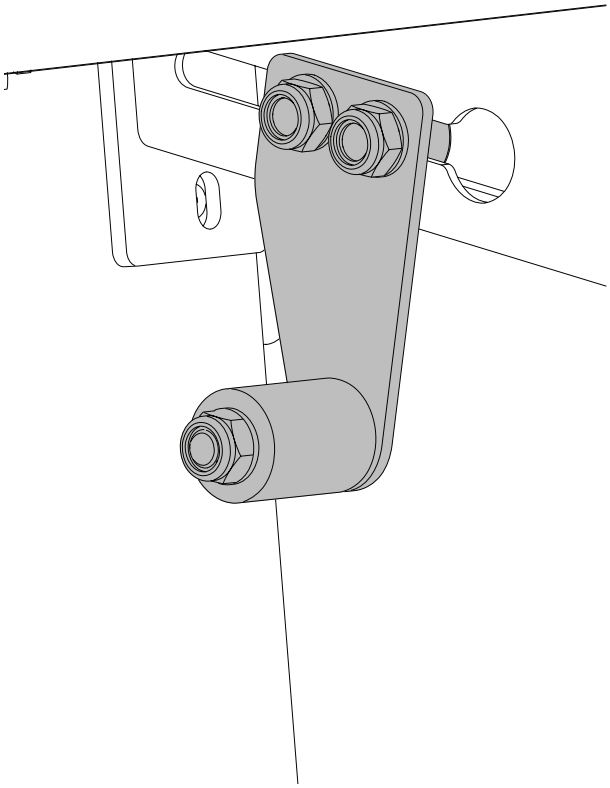

30

The height adjustment mechanism's chain must be tensioned to ensure good lift mechanism function. Begin by undoing the tensioner retaining bolts. Then slide the tensioner against the chain until the chain is lightly tensioned. Then tighten the screw joint.

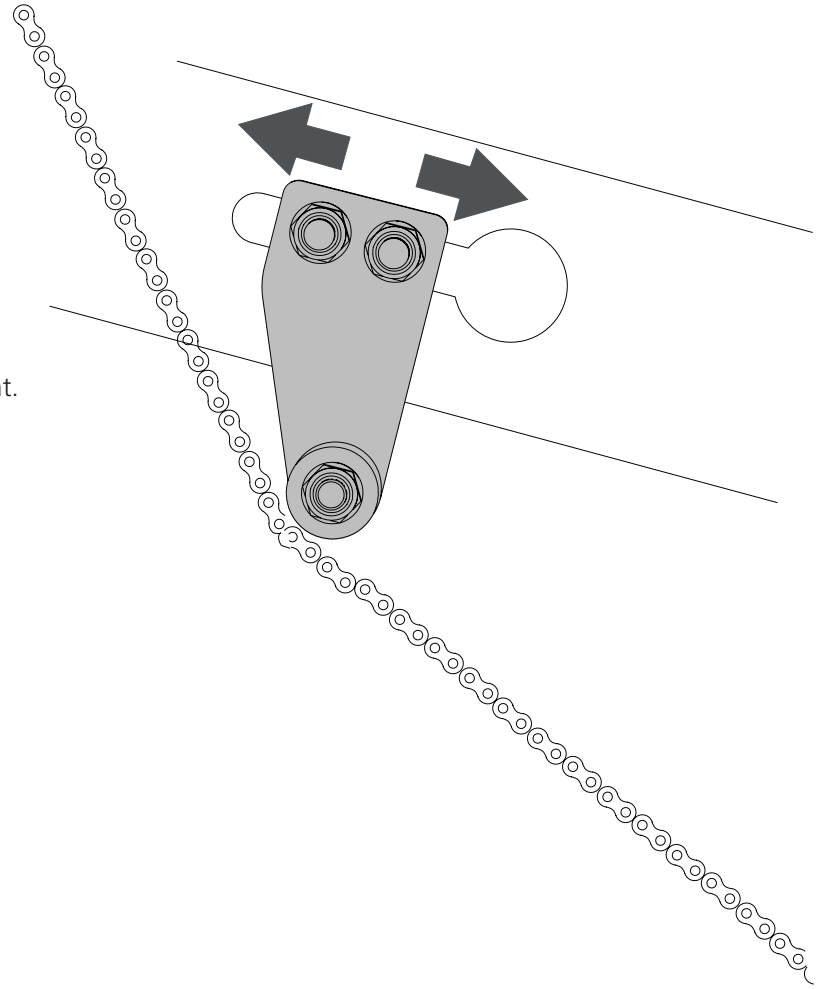

PRO SET INSTALLATION

The following steps concern the Pro Set computer setworks. Installation involves heavy lifting that may require two people.

WARNING! Heavy! Risk of injury.

Always be two people when lifting heavy objects.

WARNING! Risk of crush injuries.

Wear safety gloves and take care when setting the components down.

ADDITIONAL EQUIPMENT:

There are accessories for this machine that may affect the assembly sequence described in this manual. Read through the assembly instructions in the various manuals before starting work to gain an overview of the different assemblies.

31

4 x – M5x35

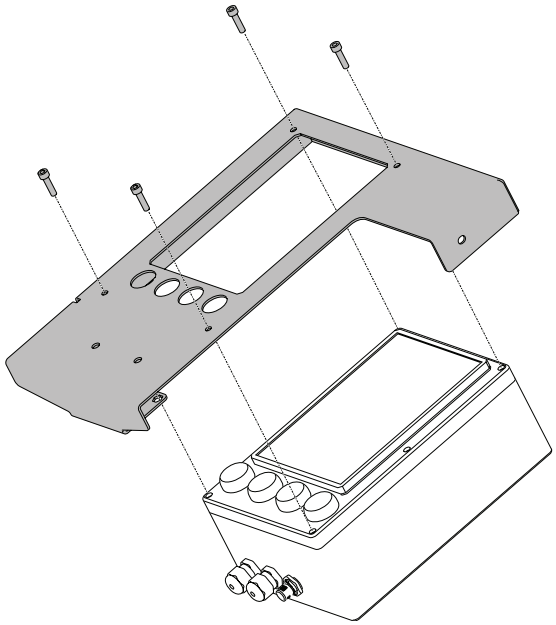

32

2 x – M5x45

1 x – M6x50

2 x – M5

1 x – M6

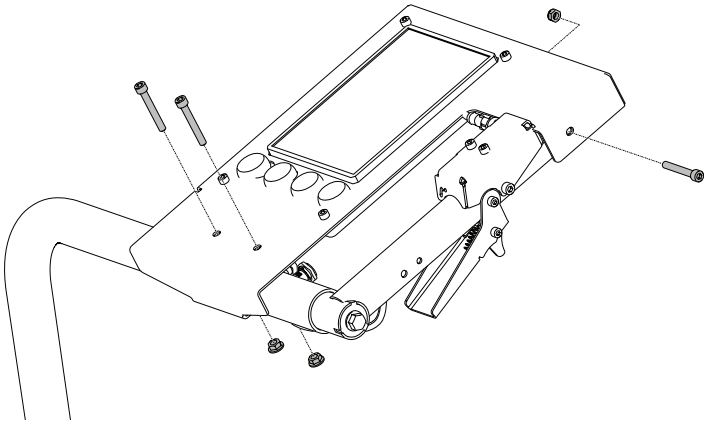

33

Plug the cable into the Pro Set unit's connector.
Route the cable in the tubular arm.

Plug the Pro Set cable into the electronics box.

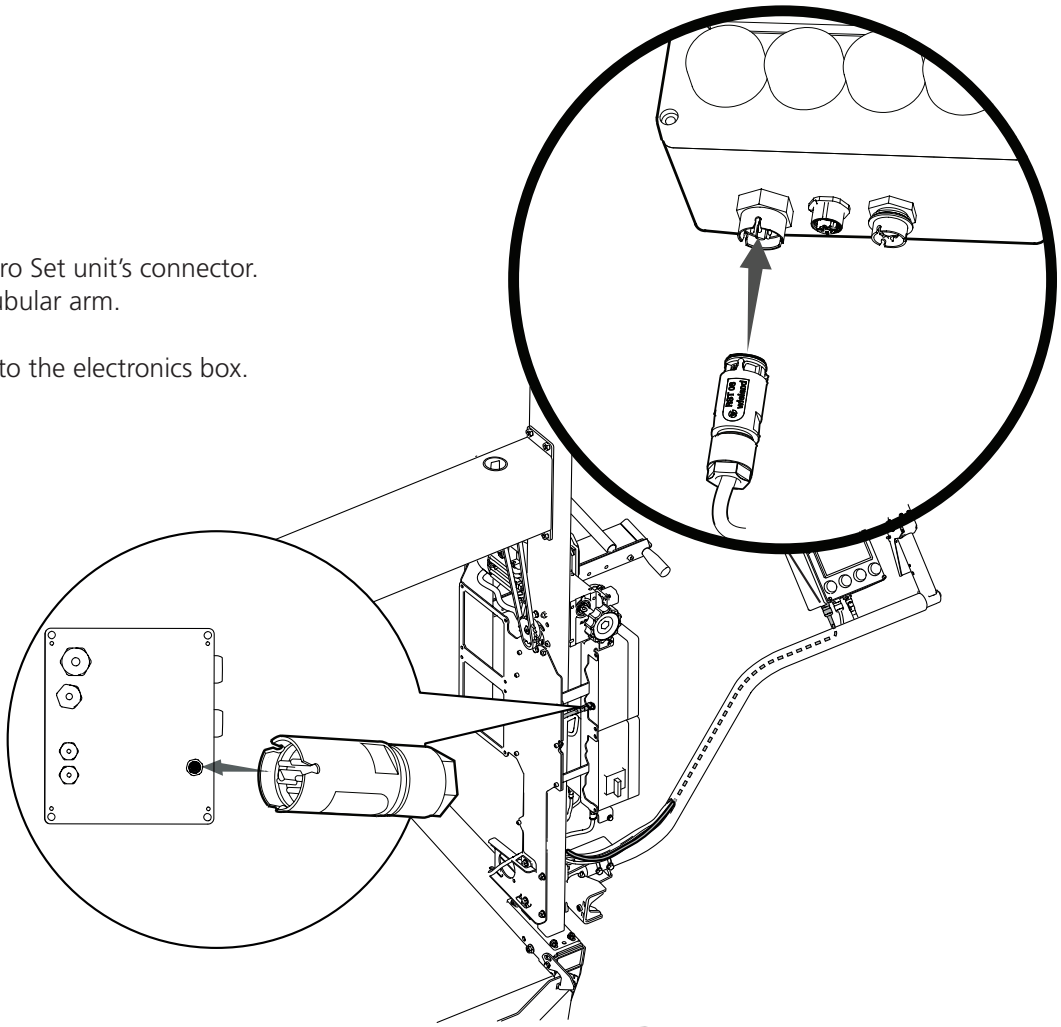

34

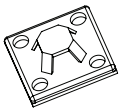

1 x – 6605-001-0320

1 x – 6605-001-0090

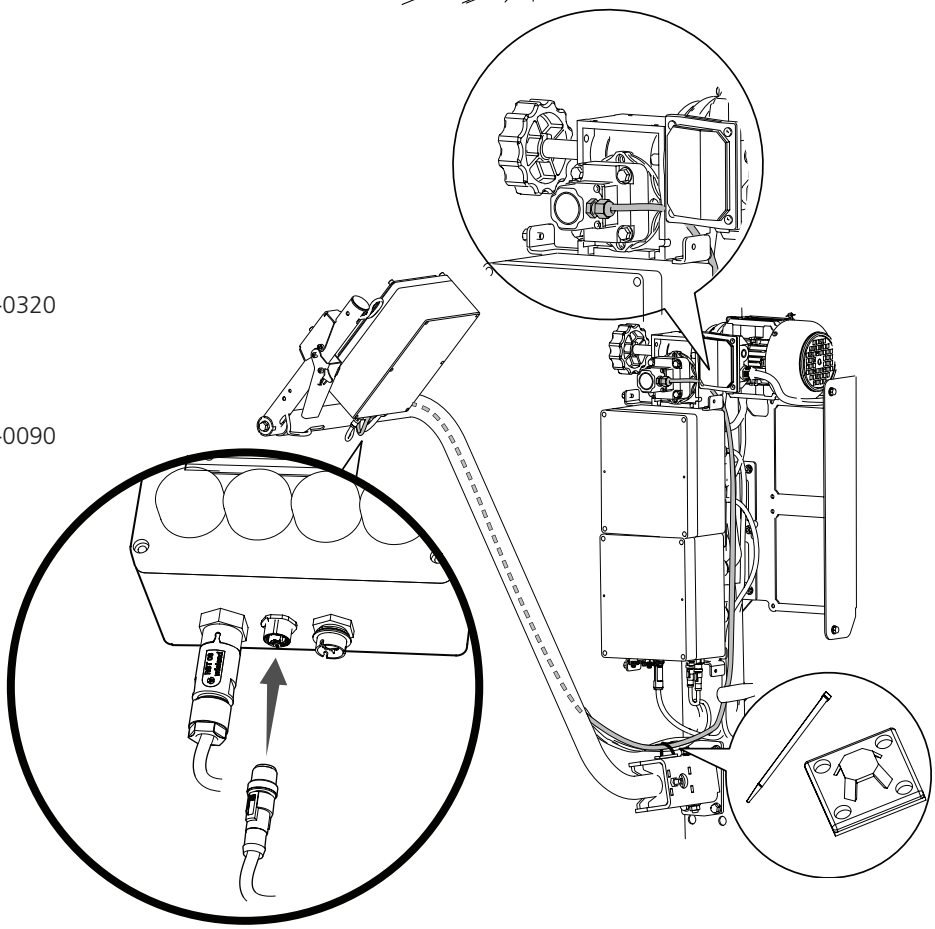

35

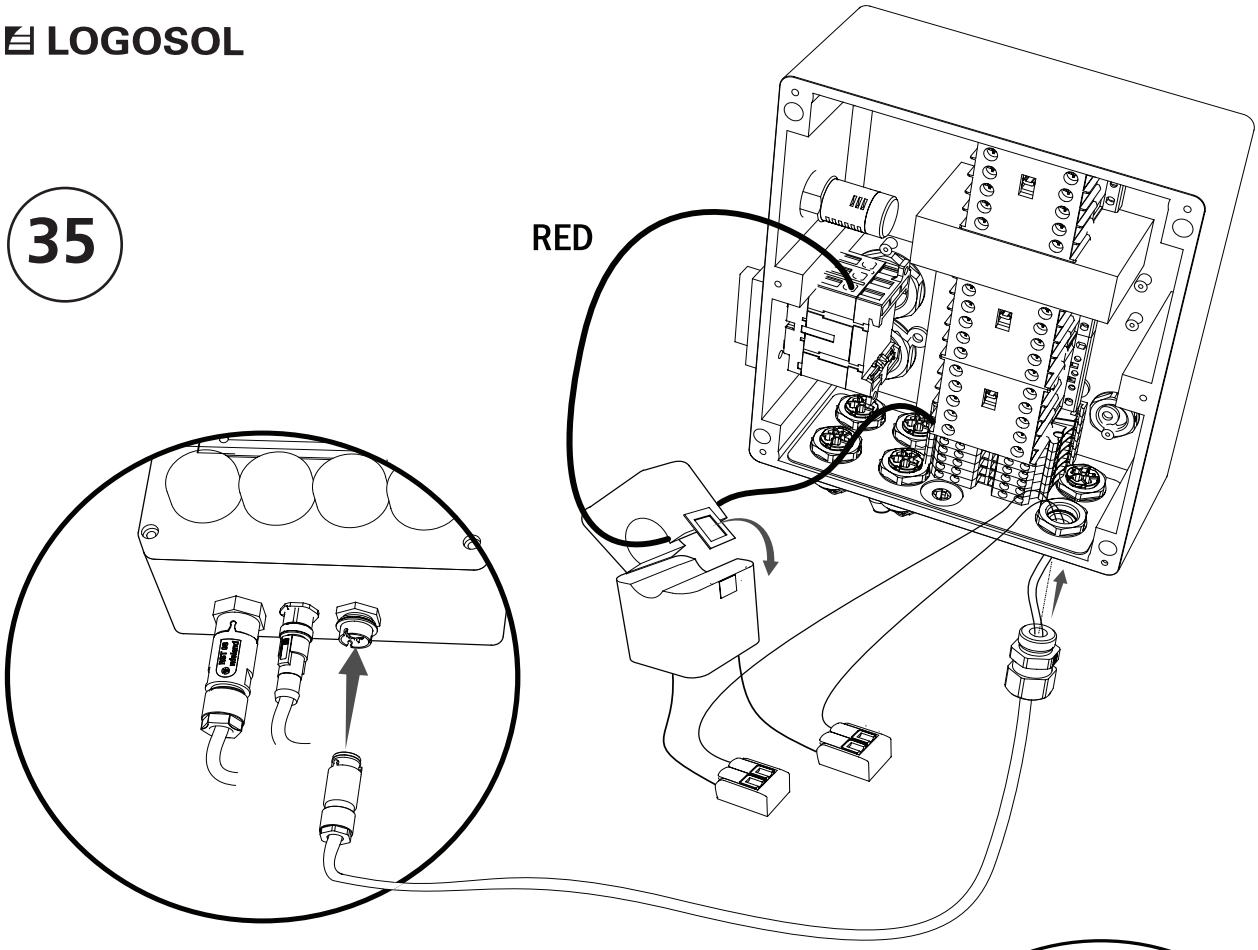

36

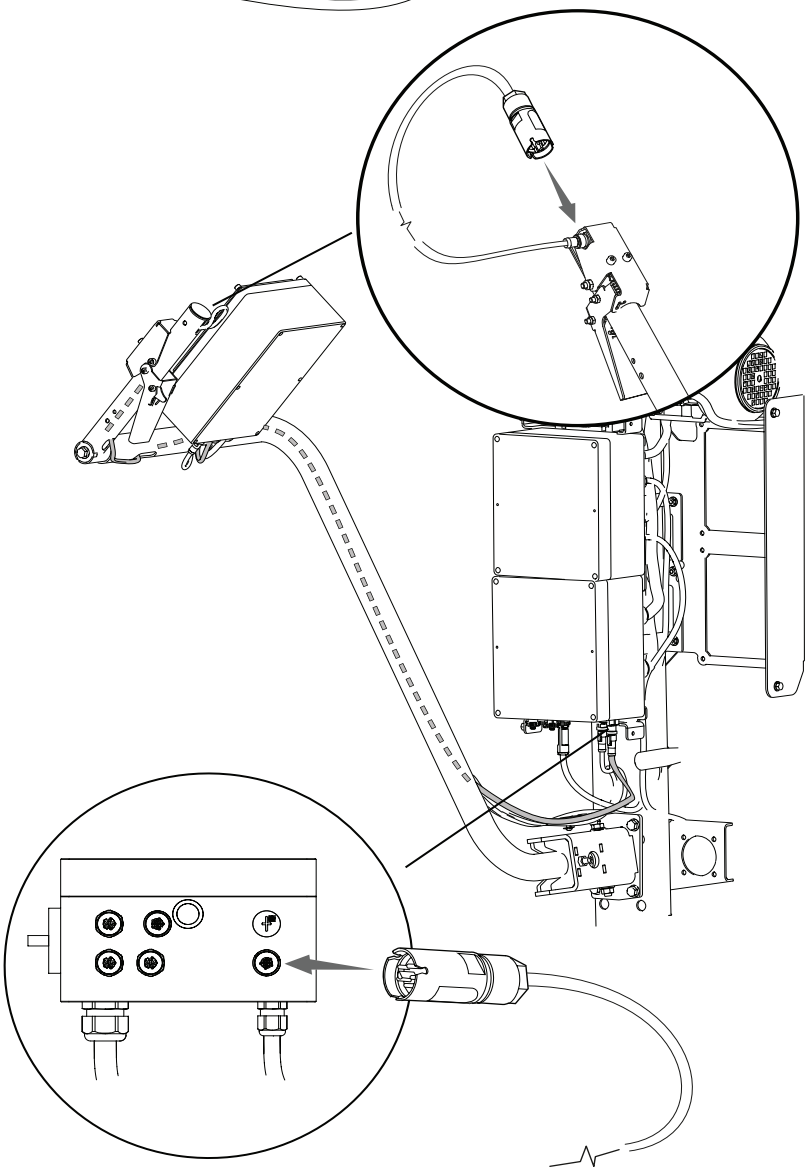

37

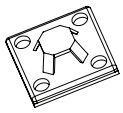

1 x – 6605-001-0320

1 x – 6605-001-0090

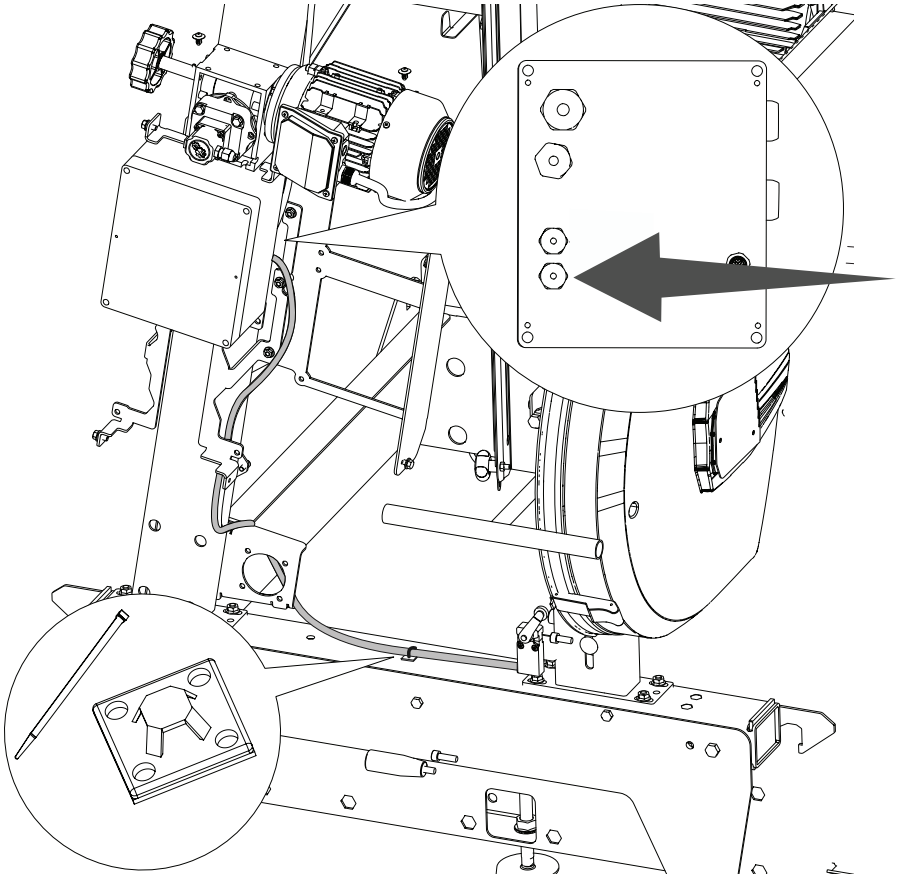

38

4 x – M8x12

4 x – M8

There is a groove (A) in the plate. Fit the cable from the upper limit switch (B) into the groove.

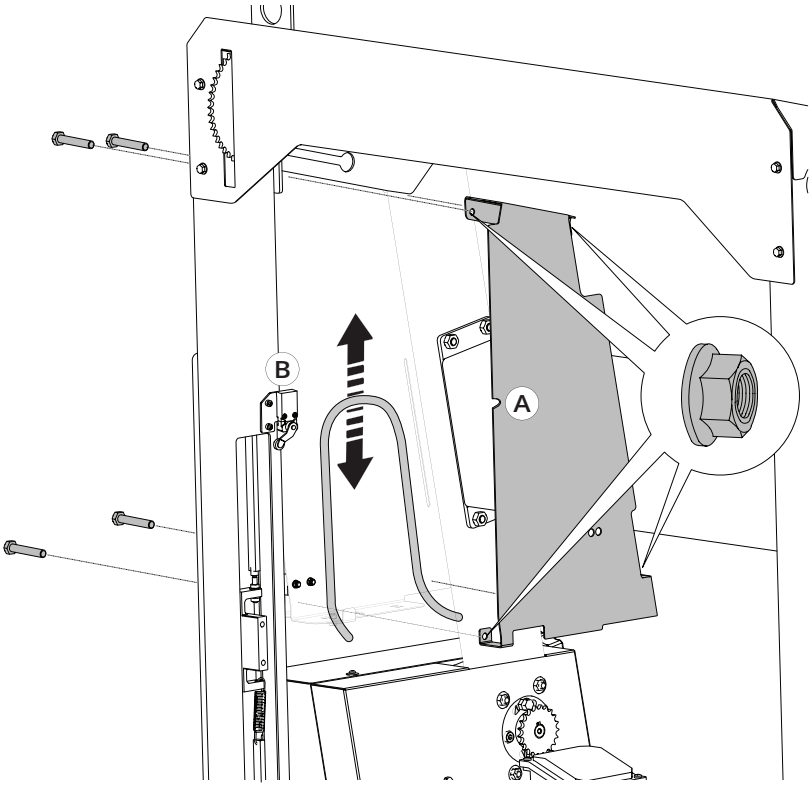

39

Pull the main switch handle out from the electrical cabinet (A).

Mount the electronics cabinet rear cover onto the mounting plate. Secure using two bolts (B).

Push the main switch handle back in place.

2 x – M6x12

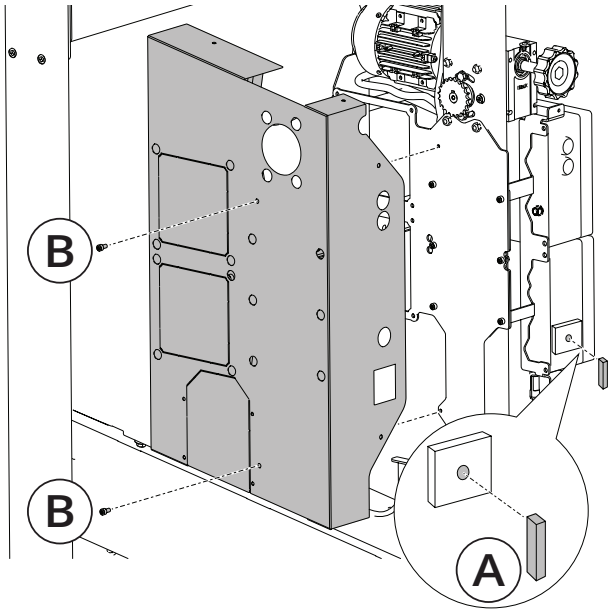

40

Thread the four bolts (A) a few turns into the rear cover of the electronics cabinet and into the electronics box and cable holders.

4 x – M6x12

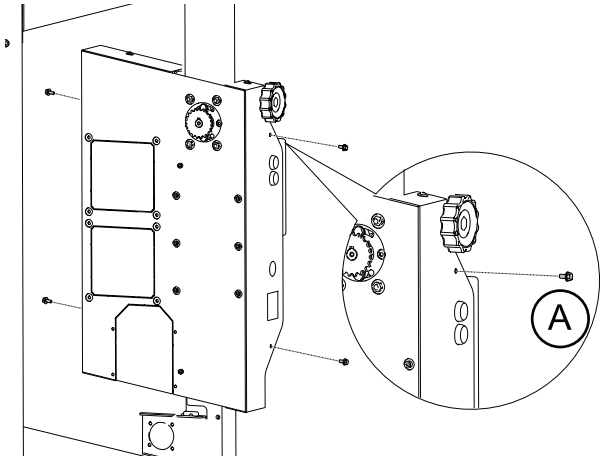

41

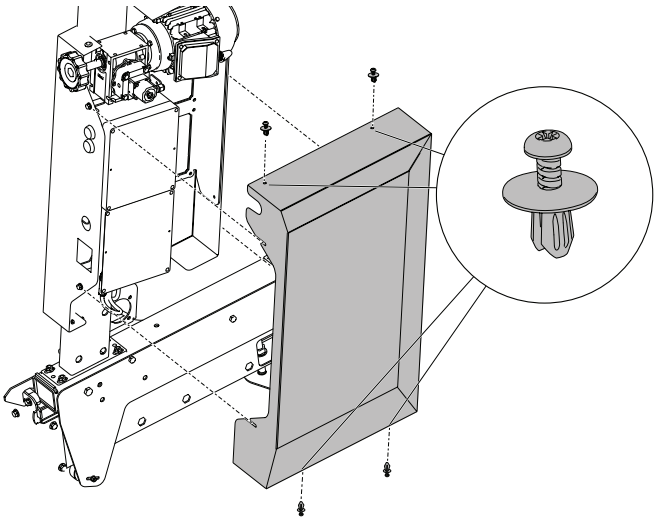

Slide the electronics cabinet's front cover under the four bolts installed under item 39. Tighten the four bolts. Press in the four quarter-turn fasteners and tighten the bolts.

ARM HEIGHT ADJUSTMENT

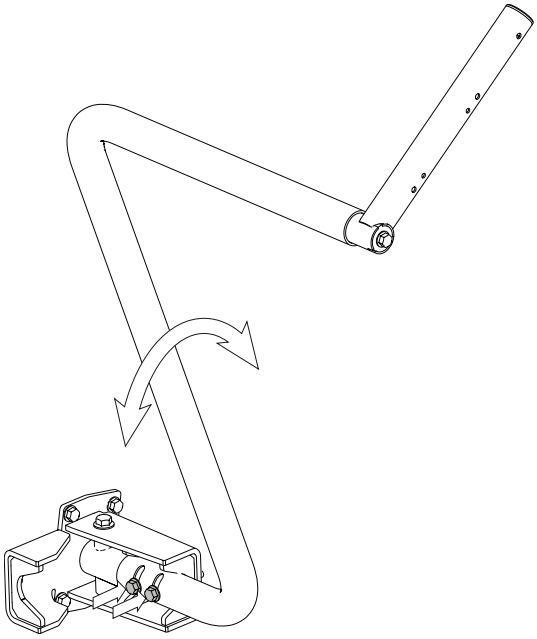

Loosen the lower tubular arm bolts. Adjust the arm to the desired height. Then tighten the bolts.

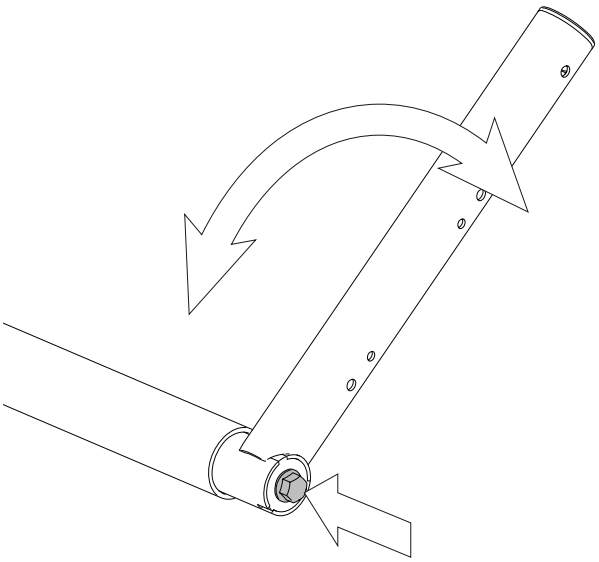

Loosen the upper tubular arm bolts. Adjust the arm to the desired height. Then tighten the bolts.

TROUBLESHOOTING GUIDE

PROBLEM/SYMPTOM	PROBABLE CAUSE	ACTIONS
The computer setworks do not start	• Loose contacts • Moisture in the computer setworks. • Residual current device (RCD) tripped • Fuses blown in the saw box.	• Try removing the connectors and then reinstalling them. • Disconnect the power and take the box inside, let it dry and blow it out with compressed air • If an RCD trips, contact an electrician for troubleshooting. • Replace the fuses in the saw box.
Abnormal noises from the mechanism	• Poor lift chain alignment • Insufficient chain tension • Gearbox wear • Worn bearings • Over-tensioned chain	• Check alignment between the lower and upper lift sprockets • Check chain tension. • If bearing or gearbox wear is suspected, check for visual wear on the saw head bearings at the secondary shaft and at the gearbox mounting. Run the functions and listen for abnormal noise and feel if heat is building up. If a worn part is discovered, replace it.
The machine runs in the wrong direction.	Phase reversal in connector	• Switch phases in the machine's 400v socket.
The computer setworks is working, but the height adjustment motor does not run.	• The motor is running hot; motor protection has stripped.	• Wait until the motor has cooled and resume operation; the motor must not run hot. If the problem recurs, contact Logosol.

FIRST START-UP

Calibration

The saw blade height position value must be calibrated at the first start-up. The computer setworks will show a value in the display at start-up. Measure the distance between the saw blade, on a downward-set tooth and a log bed.

Hold down the calibration button until the value shown in the display disappears, then enter the measured value. Conclude the operation by pressing the enter button.

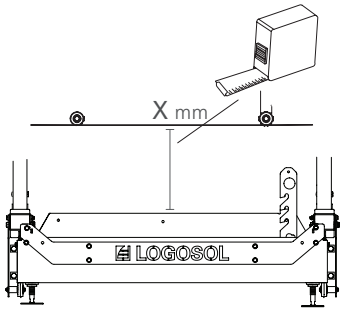

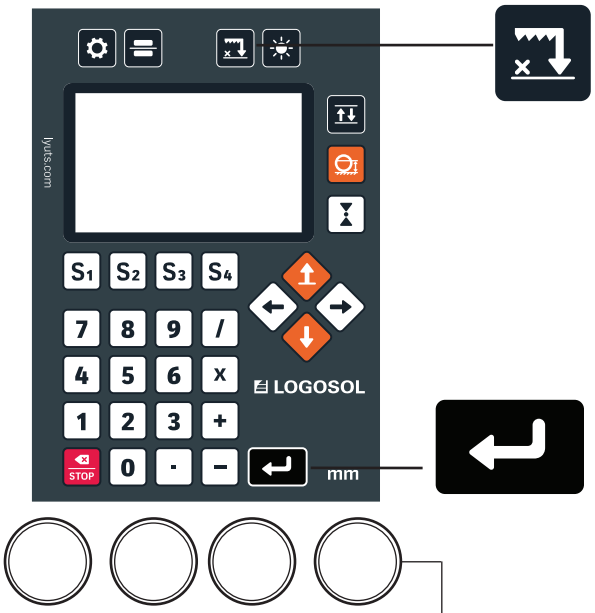

Check the calibration by moving the saw head 200 mm and measuring to confirm actual saw head movement is 200 mm. If the measurements do not correspond, repeat with a 500 mm movement. Check by measuring from the saw blade to the log bed.

If the measurements still do not agree, try recalibrating.

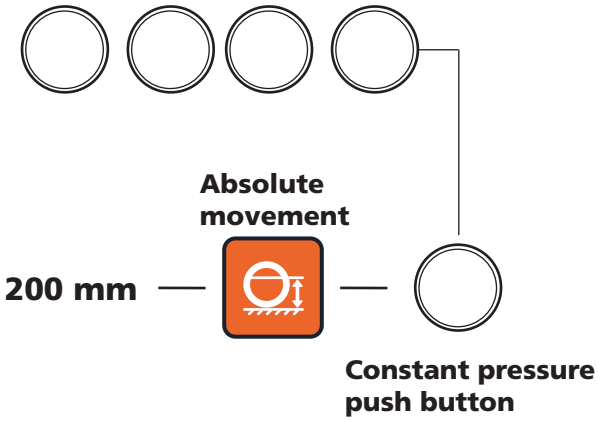

Check before operation

Check that the limit switches are working. Proceed as follows: Run the saw head until the lower switch trips; proceed slowly at the end before impact. Then repeat the operation with the upper switch.

Listen for abnormal noises and make sure the chain is aligned between the upper and lower sprockets.

Make sure there is no physical contact **before** the limit switches are triggered.

DRILLING TEMPLATE FOR LIMIT SWITCH - RETROFIT

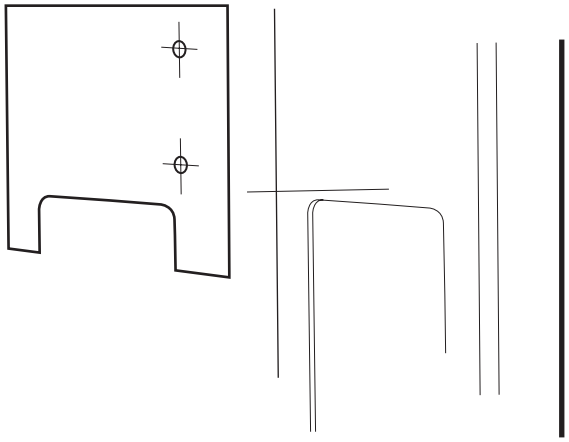

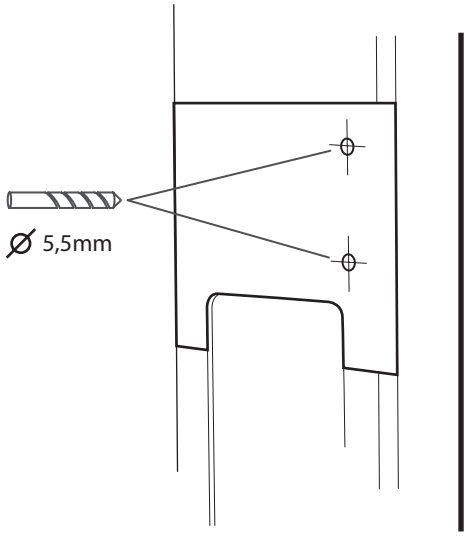

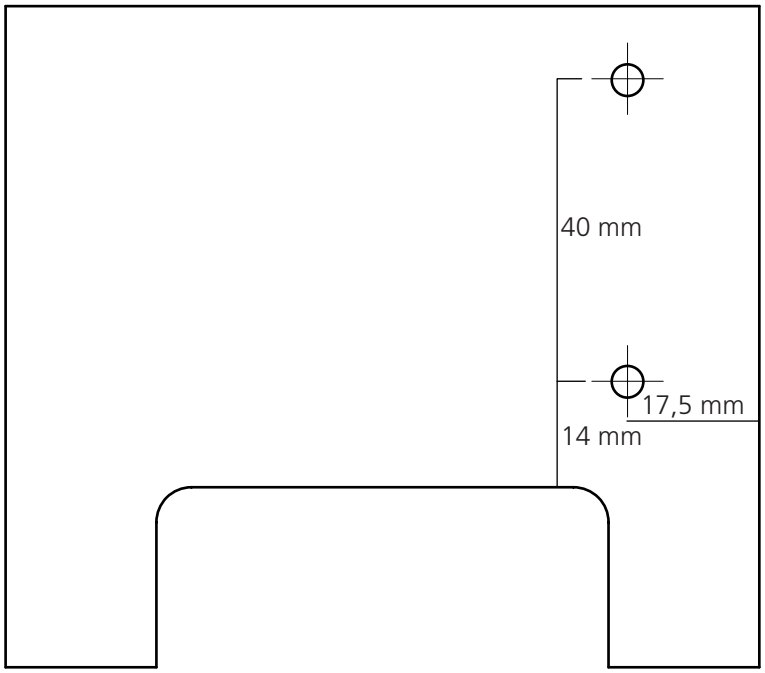

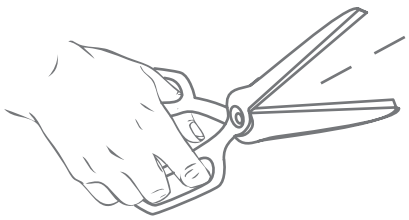

Declaration of Conformity

In accordance with Directive 2006/42/EC, Annex 2A

Logosol AB
Arkivvägen 6
SE 871 93 Härnösand

hereby declares that the add on **Easy Set / Pro Set for electric motor** to Logosol B1001

has been manufactured in conformity with:
Machinery Directive 2006/42/EC, EMC Directive 2014/30/EU

and has been manufactured in conformity with the following harmonised standards:
EN ISO 12100:2010, EN 60204-1:2018,
EN 50370-1:2005, EN 50370-2:2003.

The band sawmill supplied is identical to the band sawmill that underwent EC type examination.

Härnösand 2024-03-28

Fredrik Forssberg, CEO

Declaration of conformity

Logosol AB,
Arkivvägen 6
SE-871 93 Härnösand, Sweden

hereby declares that the add on
Easy Set / Pro Set for electric motor
to Logosol B1001

has been manufactured in conformity with:
Supply of Machinery (Safety) Regulations 2008

and has been manufactured in conformity with the following harmonised standards:
BS EN ISO 12100:2010,
BS EN 60204-2:2018,
BS EN 50370-1:2005,
BS EN 50370-2:2003.

Robert Berglund, CEO, is responsible for the technical files.

Härnösand 2026-04-23

Robert Berglund, CEO

LOGOSOL

Arkivvägen 6, SE-871 93 Härnösand, SWEDEN
+46 611 182 85 | info@logosol.com | www.logosol.com