LOGOSOL

USER MANUAL

0458-395-5451

REV:1

PRO SET - COMPUTER SETWORKS

For the latest version of the manual and more languages, scan this QR code. Or visit logosol.com

EN

CONTENT

ProSet Instruction Manual: Introduction / **3**

1. General overview. / **4**
2. Instructions for checking ProSet connection and troubleshooting tips. / **14**
3. FIRST AND INITIAL START-UP. / **19**
4. ProSet operation. / **23**
5. Settings table. / **29**
6. Error codes and troubleshooting. / **32**
7. CodE on the display. Unlocking demo mode. / **35**

ProSet Instruction Manual: Introduction

Welcome to ProSet, the innovative and user-friendly computer networks specially designed for Logosol band sawmills. This manual is your guide to operating and maximizing the potential of your Logosol band sawmill with ProSet computer networks.

ProSet has been designed with ease of learning and use as a core principle. Even if you are new to computer networks, you will find that ProSet's intuitive interface and straightforward functionality make it easy to master. This simplicity does not compromise its capabilities; instead, it ensures that you can quickly become proficient in using the system, allowing you to focus more on your sawmill operations.

With ProSet, your sawmill's productivity will see a significant boost. You'll notice a marked improvement in the way your sawmill functions.

One of ProSet's key advantages is its ability to maximize the yield from each log. Its precision and smart algorithms ensure that you get the most out of your logs, reducing waste and increasing the profitability of every log.

ProSet is not just about performance; it's also about reliability. With its built-in self-diagnostic capabilities. This feature greatly reduces downtime and maintenance costs, keeping your sawmill in continuous, smooth operation.

Understanding the demands of sawmill environments, ProSet is built to withstand the rigors of daily use in such conditions. Its robust design ensures that it performs consistently, even in the challenging conditions typical of sawmills.

As you proceed through this manual, you will find detailed instructions on how to make the most of ProSet's features. Whether you are looking to increase productivity, improve yield, or ensure continuous, reliable operation, computer networks ProSet is your trusted partner in sawmill operations.

Read through the user manual carefully and make sure you understand its contents before using the saw.

This user manual contains important safety instructions.

WARNING! Incorrect use can result in serious or fatal injuries to the operator or others.

1. General overview

After the ProSet turned “On” the program version should appear on the display for a couple of seconds. If after the ProSet is turned “On” nothing happened – check the power supply.

The display consists of the 6 main sections:

1. Arrows that shows where blade located relatively to the previous or next cut place.
   Cutting is permitted only after the dot is blinked and lit between the arrows.
2. The clues, errors and warning codes.
3. The board thickness or entered parameter by the operator.
4. Count of the boards in the board list.
5. Load of the AC cutting engine.
6. Distance from the down-set tooth of the blade to the saw table in mm. The value will change only if “0.0” is not on the indicator.
7. Quick sizes (pre-sets) or quick lists. To switch from quick sizes to quick lists – use left/right arrows.

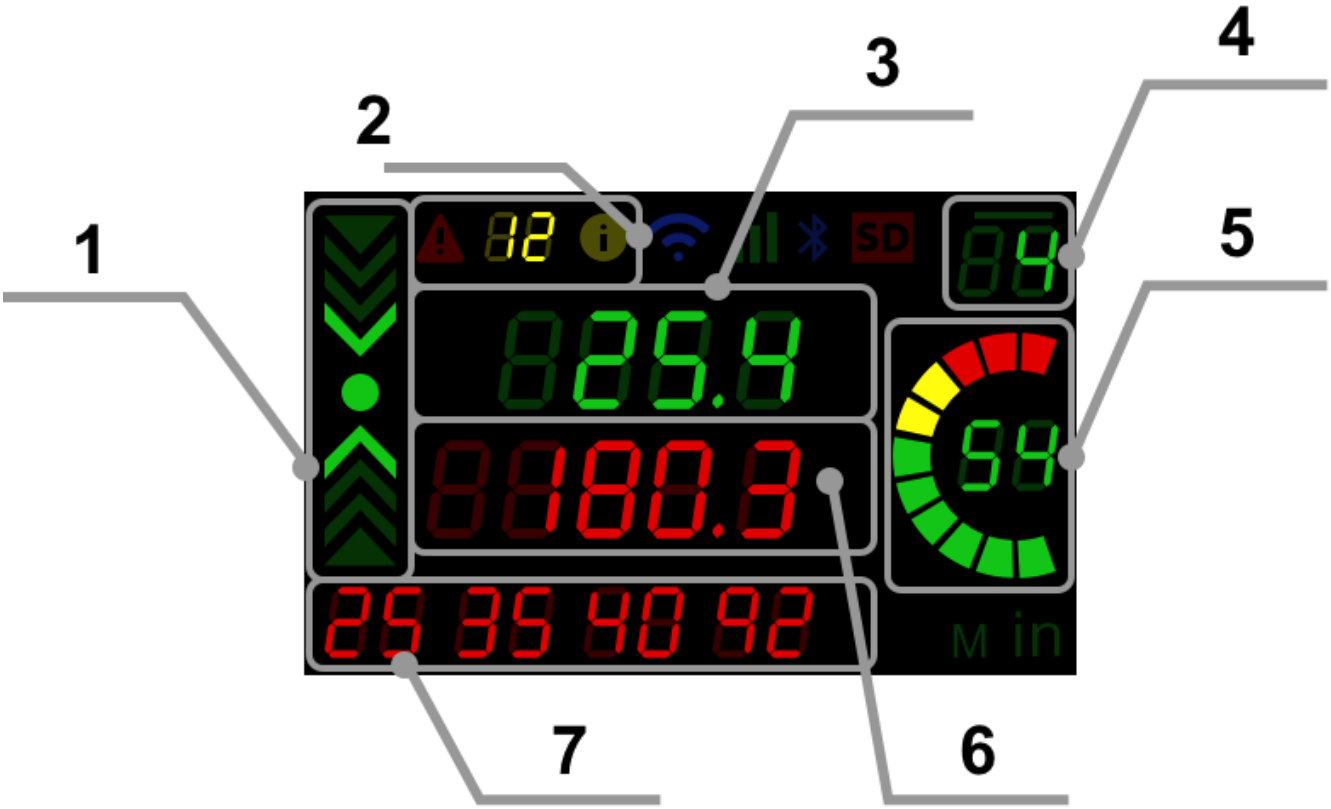

The settings (or menu) button is responsible for entering the menu and setting new system parameters. To enter the “settings menu” long press this button until you see F on the display. In case you see CodE then you need to enter Code for entering the settings

The Code for the settings is 3068.8.

It is forbidden for the machine operator to enter the "settings menu" without good reason. Also, with one short press, you can quickly clear the entered values of the list or just the thickness of the board.

The

(or the stop button) has several functions:

- deletion of the last entered digit in the process of entering the thickness (or another value);
- stopping movement of the sawhead;
- by pressing the stop button for 2-3 sec. the entered board thicknesses list is cleared

The **Enter button** is responsible for saving the setting or entering the command to position sawhead to the next cutting place taking into account kerf, etc.

For the automated positioning of the sawing head, it is essential to maintain continuous pressure on the external 'Enter' button. This procedure guarantees a controlled and precise adjustment of the sawing head, in full compliance with established safety protocols and operational guidelines. Should the external 'Enter' button be released, the sawing head will cease its automatic positioning. To resume the automated movement, simply re-engage by pressing the external 'Enter' button.

The button is responsible for the functionality of “binding” (or “reference”) the saw to the actual distance from the sawmill bed (or “0”) to **the down-set tooth of the blade** in mm.

To change the distance from the sawmill bed to the saw (lower tooth) please press the reference button for about 2 sec. and enter the real value. After the new value is entered – press Enter for saving.

IMPORTANT

Before starting the sawmill, it is necessary to check whether the correct value of the distance from the sawmill bed to the **down-set tooth of the blade** is displayed on the lower indicator. If the value is not correct, you need to replace it with the correct one using the reference button .

The button is responsible for changing the kerf thickness. To change the kerf thickness it is enough to press once and enter the values of the kerf thickness. Typically, kerf thickness is more than blade thickness.

The button is responsible for the brightness of the display. To increase the brightness just press . After reaching the maximum brightness value, the system brightness will be reset to the minimum.

The **GOTO button** has a specific function, which is to execute the "go to height X from the sawtable" command. To utilize this command, simply enter the desired value using the numerical keypad, and then press the GOTO button. Afterward, the saw head will automatically move to the specified position.
For the automated positioning of the sawing head, it is essential to maintain continuous pressure on the external 'Enter' button. This procedure guarantees a controlled and precise adjustment of the sawing head, in full compliance with established safety protocols and operational guidelines. Should the external 'Enter' button be released, the sawing head will cease its automatic positioning. To resume the automated movement, simply re-engage by pressing the external 'Enter' button.

For example, if you input a value of 400 and activate the GOTO button, the blade will automatically adjust to a height of 400 mm above the saw table or bed. This adjustment facilitates precise and accurate cuts at the specified height. It is essential to continuously press the external 'Enter' button.

If you press the GOTO button when the upper indicator is empty, the ProSet will interpret it as a command to move to the last saved height position. In other words, the saw head will move to the height that was last saved by the system, providing a convenient shortcut to return to a previously used cutting height.

S1-S4 buttons can serve as quick size presets, as well as quick lists (or patterns). To modify a preset, long press the corresponding S1-S4 button after the cursor appeared enter the required value and press Enter button. For instance, to save a thickness of 45 mm as S3, long press the S3 button until cursor appears, enter 45 and press enter button.

To save a quick list (or pattern), first switch to quick lists programs by pressing left or right arrow on the keyboard. Then input the desired board list and long-press the appropriate S1-S4 button. For example, if you wish to save a boards list with thicknesses of 100, 50, 50, 25, 18 mm from the bottom up as S4, input the sum of the values (100 + 50 x 2 + 25 + 18) and long press the S4 button.

The down button serves as a means to move the saw head downwards. However, the ProSet system comes equipped with a unique feature that prevents the saw head from moving lower than the "virtual" lower limit switch (F 82 setting) using this button.

This feature serves as a safety mechanism to prevent the saw head from accidentally moving too low and causing damage to the saw or workpiece. By setting a virtual limit, the ProSet ensures that the operator cannot lower the saw head beyond the designated safe operating range. This added level of safety helps to mitigate potential risks and accidents in the workshop.

These buttons used to navigate between quick sizes (or presets) and quick lists.

The "Bump up" button has two main functions. Firstly, it allows for upward movement of the sawhead within the designated limits set by the "virtual" upper limit switch (F 88). This feature helps to prevent accidental damage to the sawmill equipment and ensures safe operation.

Secondly, the “Bump up” button is responsible for the "bump up" mode. The ProSet allows for four possible "Bump up" modes, which can be set up by performing **F 30** and entering the desired mode. The list and descriptions of the modes are as follows:

0 – Bump up button works as an "UP" button. In other words, the bump-up mode is off.

1 – Bump up above the **last cut place**. In this mode, the sawhead will be automatically positioned above the last place of the cut. This mode is especially helpful for sawmills that have a mechanism for removing the last cut board from the log.

2 – Bump up **above the board**. In this mode, the sawhead will be automatically positioned above the last board. This mode is very useful when working with someone who removes the boards after each cut.

3 – Moves sawhead up on the board thickness plus kerf. In this mode, by pressing the bump-up button, the sawhead will move up on the distance that equals board thickness plus kerf. If no thickness is entered, the display of the ProSet will show error 17.

4 – Bump up **above the first cut place**. In this mode, the sawhead will be automatically raised above the place where the "remember the height" button was pressed or above the first place of cut when cutting a list of boards (or patterns).

Once bump up is performed, the next press of this button works as an "UP" button until the next cut is made. For the automated positioning of the sawing head, it is essential to maintain continuous pressure on the external 'Bump Up' button. This procedure guarantees a controlled and precise adjustment of the sawing head, in full compliance with established safety protocols and operational guidelines. Should the external 'Bump Up' button be released, the sawing head will cease its automatic positioning. To resume the automated movement, simply re-engage by pressing the external 'Bump Up' button.

To program the desired "Bump up" mode, the operator can use the function key F30 and enter the corresponding mode number. For instance, to program the "Bump up" button above the first cut place, the operator can enter F30 = 4.

Once the desired mode is programmed, the operator can set the distance on which the sawhead should move when the "Bump up" button is used by entering the distance value in F31. For example, if F31 = 10, then the saw head will bump up 10mm above the chosen place.

Starting from the program version 13 and above it is possible to program the **ROBO button.** For the program versions 13 and lower the ROBO button works as a calibration button.

From the program version 13 and above the possible modes of the **ROBO button** are (with its default setting as the calibration button):

1 – Calibration.

The ProSet will automatically raise/lower the sawhead for approximately 20 sec. for learning the parameters of the sawmill mechanics.

2 – Add height as the first board into the boards list.

By pressing the ROBO button in this mode will add the height at which blade is located as the first board in the boards list. This mode can be useful for those who needs to cut of the middle part of the log.

3 – “Go home” mode. In this mode by pressing the ROBO button sawhead will be automatically positioned to the preprogramed height. By enabling this mode will be required to enter the height at which sawhead should be positioned.

4 – S5 mode. By enabling this mode ROBO button starts to work as S5 quick size. Quick list also can be created.

5 – Bump up above first cut.

In this mode, by pressing the ROBO button the sawhead will be automatically raised above the place where the "remember the height" button was pressed or above the first place of cut when cutting a list of boards (or patterns). This mode is particularly useful for sawmill operators who would like to have two bump up modes - one using the original button and another using the ROBO button.

The calibration can be performed in any of 2-5 modes by long pressing the ROBO button.

To change the mode use **F 23** setting.

For example, performing the command F 23 =4 would set the ROBO button as S5 quick size, allowing it to function as a S5 quick size button.

For setting “go home” heights F 27 can be used.

To set distance on which sawhead will bump up when F 23 = 5 use F 28 setting.

Pressing the minus button will remove the last board from the cut list (remove the board thickness from the top of the list), but only if the cutting process has not yet started. This feature can be useful in cases where the operator needs to make an adjustment to the cut list before starting the cutting process.

Pressing the divide button followed by a numerical value and then pressing enter will create a board list, based on the height where the sawblade is located, and where each board is of the specified thickness, taking into account the kerf thickness.

For example, / 25 ↵ will create a boards list where each board is 25 mm thick (kerf thickness is taken into account).

Using the divide button, it is also possible to create a board list for cutting **lamellas or veneers**. For example, / 5.2 ↵ would create a list where the last board (the closest to the sawing table) is the same as the minimal height for cutting (or the value in F 82 parameter), and the rest of the boards will be 5.2 mm thick, taking into account the kerf thickness.

The plus and multiply buttons are incredibly useful for creating boards lists quickly and efficiently. For example, if you press 100 + 50 x 2 + 25 x 4 + 18 and then press Enter, a board list with 8 boards will be created. This list will include 2 boards with a thickness of 50mm, 4 boards with a thickness of 25mm, and 1 board with a thickness of 28mm.

⚠ IMPORTANT

As you press the multiply button, a clue will appear in the top left corner of the screen indicating how many boards of the desired thickness can be added to the list. These clues make it much easier to use the ProSet and streamline the cutting process.

Before enteting the desk list position, the sawhead approximately on the height of first cut, so the waste could be minimal. ProSet will help to create the board list with good yield.

The **"remember the height"** or **"remember the point"** button plays a crucial role in setting the starting point for sawing logs on the sawmill bed. It is recommended to use this button only for the first cut after placing a new log on the sawtable.

⚠ IMPORTANT

After the new log is placed on the sawmill bed (sawtable), for the first cut, press the to indicate where the first cut will be made.

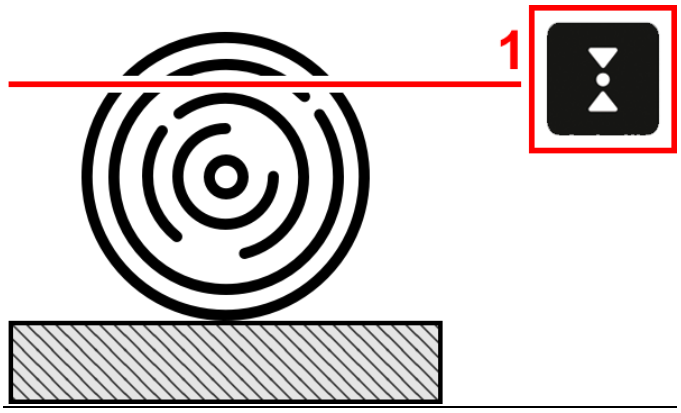

By pressing this button at the desired height of the first cut, the height at which it was pressed will be remembered and used as a reference point for subsequent cuts, taking into account the kerf thickness. It is important to note that this button should not be pressed every time the saw is set to the next cutting thickness, as it is intended to be used only for setting the initial cutting point manually.

The ProSet will automatically remember the place where the last cut was made, making the process of cutting logs more efficient and accurate.

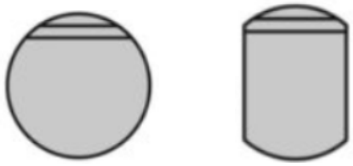

This button **should NOT be pressed every time** the saw is set to the next cutting dimension.

2. Instructions for checking ProSet connection and troubleshooting tips

Please note that these checks should only be performed after the ProSet and sensor have been installed and properly wired.

These checks will help you ensure that the ProSet is connected properly and identify any issues if they are.

Do not proceed to the next step until the current step is successfully made.

1. **Initial Action:** Switch on the ProSet. Observe the display, which should initially show the program version for a few seconds, followed by other values (such as quick sizes, distance from the sawblade to the sawtable, etc.).

Troubleshooting Steps if Not Working:

A. Display Not Lighting Up:
   - Check the Power Connection. Ensure that the power connector to the ProSet is properly plugged in and free from damage.

B. Verify Electricity Supply:
   - Confirm the presence of electricity to the ProSet and band sawmill itself.

C. Inspect Internal Connections:
   - Examine the connections inside the ProSet enclosure for any loose or disconnected wires.

Important Note: Do not proceed to the next troubleshooting step until the current issue has been successfully resolved. This sequential approach ensures that each potential problem is addressed systematically and effectively.

2. **Initial Action:** Press and hold the external UP button on the ProSet for a few seconds. Observe that the sawing head should move upwards, and the display should show an increasing distance between the sawtable and the saw blade.

Troubleshooting Steps if Not Working:

A. Sawing Head Not Moving:

Press the UP button on the EasySet. If the sawing head still does not move upwards, proceed with the following checks:

- Verify the presence of electricity.
- Ensure that the limit switches are not pressed or activated.

- Inspect the electrical components of the EasySet, including motor connections and contactors, to ensure no wires have become disconnected.

B. Sawing Head Moves with EasySet but Not with ProSet:
   - Check that the power connector to the ProSet is securely plugged in and undamaged.
   - Inside the ProSet enclosure, ensure that the relays are correctly inserted into their sockets and the wires from the UP button are properly connected.

C. Sawing Head Moves Down When Pressing on the ProSet UP:
   - This indicates a potential issue with the electrical connection that needs to be addressed.

D. Display Reading Inconsistencies:
   - If the number on the display (indicating the distance from the sawtable to the saw) decreases while the sawing head is moving upwards, perform F 14 (Code 3068.8).
   - If the display does not show any change in distance during the movement of the sawing head, further inspection and potential servicing of the sensor may be required. Check if the pin showed on the picture below is properly installed and sensor shaft is properly fixed with it.

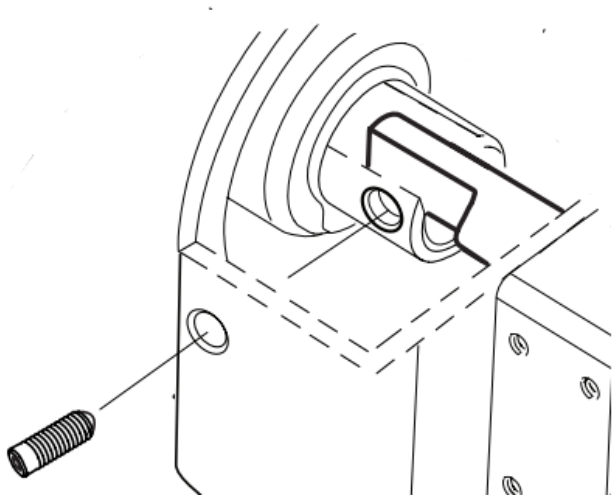

- Ensure all connectors are properly plugged and wires not broken.
- Perform F 19 = **On** (Code 3068.8) and check if error 19 appears in 5-10 seconds. If error 19 appears, check if the sensor cable is broken. If error 18 appears, check the D+ and D- connections from the sensor to the ProSet control board.
- Perform a reset to the factory settings using F 34 (Code is 3068.8) and try again.

Important Note: Do not proceed to the next troubleshooting step until the current issue has been successfully resolved. This sequential approach ensures that each potential problem is addressed systematically and effectively.

3. **Initial Action:** Press and hold the external DOWN button on the ProSet for a few seconds. Observe that the sawing head should move downwards, and the display should show an decreasing distance between the sawtable and the saw blade.

Troubleshooting Steps if Not Working:

Press the DOWN button on the EasySet. If the sawing head still does not move downwards, proceed with the following checks:

- Verify the presence of electricity.
- Ensure that the limit switches are not pressed or activated.
- Inspect the electrical components of the EasySet, including motor connections and contactors, to ensure no wires have become disconnected.

A. Sawing Head Moves with EasySet but Not with ProSet:
   - Check that the power connector to the ProSet is securely plugged in and undamaged.
   - Inside the ProSet enclosure, ensure that the relays are correctly inserted into their sockets and the wires from the DOWN button are properly connected.
B. Sawing Head Moves UP on the ProSet When Pressing DOWN:
   - This indicates a potential issue with the electrical connection that needs to be addressed.

Important Note: Do not proceed to the next troubleshooting step until the current issue has been successfully resolved. This sequential approach ensures that each potential problem is addressed systematically and effectively.

4. **Initial Action:** Press and hold the DOWN button located on the ProSet control panel for a 3-4 seconds. While the button is being pressed, the sawing head should move downward.

Troubleshooting Steps if Not Working:

A. Error 12 Appearance:
   - Perform Function 12 (Code 3068.8) and then attempt the operation again. This applies if the error appears or if the sawhead moves up instead of down.
B. Error 01 Appearance:
   - Ensure the power connector to the ProSet is securely plugged in and undamaged.
   - Verify that no limit switch has been reached.
   - Check that the sawing head is not in its end positions.
   - Inside the ProSet enclosure, ensure that the relays are correctly inserted into their sockets and the wires from the ProSet control board are properly connected.
   - Execute F 1 = 3 and try the operation again.

Important Note: Do not proceed to the next troubleshooting step until the current issue has been successfully resolved. This sequential approach ensures that each potential problem is addressed systematically and effectively.

5. Initial Action: Firmly press and hold the UP button on the ProSet control panel for 3-4 seconds. The sawing head should begin to move upwards during this process.

Troubleshooting Steps if Not Working:

A. Error 01 Appearance:
   - Check that the power connector to the ProSet is securely connected and free from damage.
   - Confirm that no limit switch has been triggered.
   - Ensure that the sawing head is not at its maximum height.
   - Inside the ProSet enclosure, ensure that the relays are correctly inserted into their sockets and the wires from the ProSet control board are properly connected.

- Perform F 1 = 3 and attempt the operation once more.

After completing all the checks, you can proceed to the First and Initial Settings section.

3. FIRST AND INITIAL START-UP

IMPORTANT

THE SETTINGS BELOW ARE PERFORMD ONLY AT THE INITIAL START-UP OR FULL RECONFIGURATION!

Read this manual carefully before reconfiguring your system.

NO NEED TO PERFORM THESE SETTINGS EVERY DAY!!

IMPORTANT

If you have ProSet or similar first check and perform "Instructions for checking ProSet connection and troubleshooting tips".

Hereinafter, it will be common to "perform F XX". This means that you need to enter the settings mode. And enter the command code XX (two-digit number). After pressing the menu (or settings) button the F should light up on the display and the cursor will start blinking.

Then enter the number of the settings and press Enter button. If this is an important setting, then the system will require a code (done so that the sawmill operator cannot change the settings uncontrollably), see fig. below.

Code is 3068.8

Move the sawhead down until the reach lower limit switch or when the distance between the sawtable and sawblade is minimal possible for cutting. Measure the distance from the **the down-set tooth of the blade** to the sawtable.

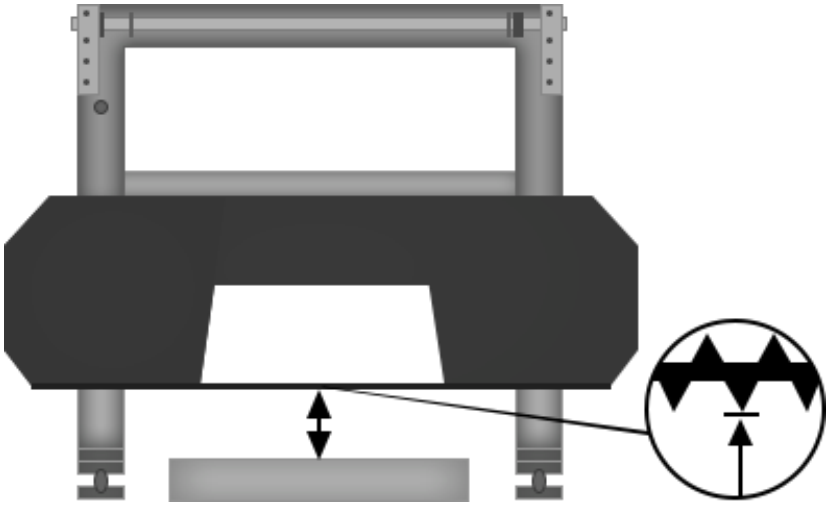

1. Perform F 92.

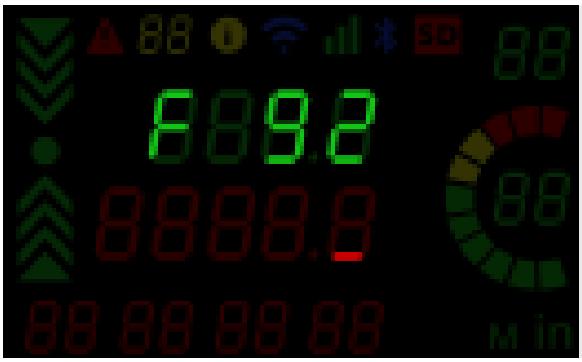

2. Enter the measured distance in p.1 and press Enter button. Then F98 will display.

3. Press the external "Up" button and raise the saw to the maximum height above the "bed" of the band sawmill or until upper limit switch is pressed.
4. With a ruler or tape-measure, measure the distance from the “bed” to **the down-set tooth of the blade**. Check the picture below.

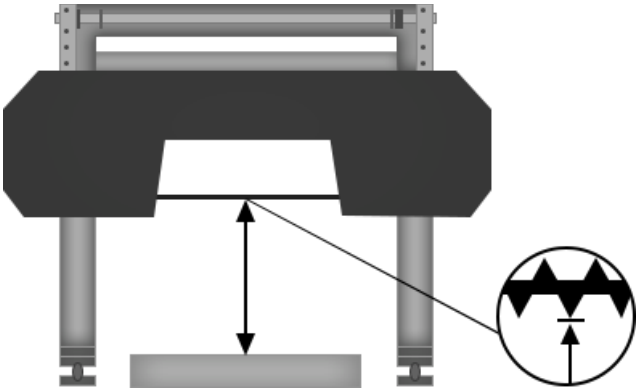

5. Enter the measured distance and press Enter button. Perform calibration using the ROBO button or F 90. During the calibration ‘oooo’ will be visible on the display.

6. Check the accuracy by using GOTO button a few times. For example, press 200 and , and 100 and press and etc. After each positioning check the distance from **the down-set tooth of the blade** to the sawblade.
   If the sawhead positioned not within programmed accuracy then using the button (or ‘refference’ button) fix the measurements from the sawtable to the blade and check p.6 again. If the positioning still not accurate then start from p.1 (something was done wrong previously).

   For the automated positioning of the sawing head, it is essential to maintain continuous pressure on the external 'Enter' button. This procedure guarantees a controlled and precise adjustment of the sawing head, in full compliance with established safety protocols and operational guidelines. Should the external 'Enter' button be released, the sawing head will cease its automatic positioning.

To resume the automated movement, simply re-engage by pressing the external 'Enter' button.

If the accuracy of the sawing head positioning is correct – perform “calibration” by F 90 or ROBO-button.

Next, enter the rated current of the main engine of the sawmill. To do this, you need to perform F 24 and enter the rated current value.

The nominal value is indicated on the motor rating plate. An example of a nameplate is shown on fig. below.

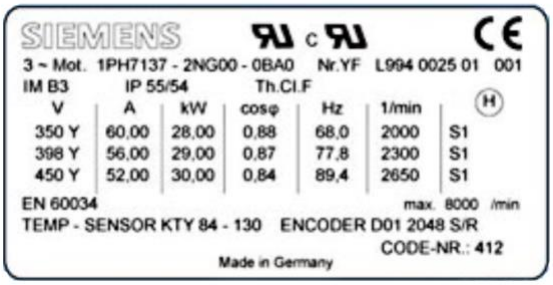

With a nominal engine running, the pie chart will be shown as in fig. below. The rated current value is the normal mode of operation of the main engine of the sawmill.

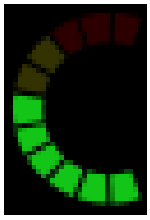

When exceeding by 20% of the nominal, 2 yellow bars are added to the pie chart.

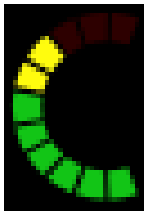

This is the main engine limit value. With long-term operation of the main engine in this mode, the engine may overheat and, as a result, lose engine operation lifetime.

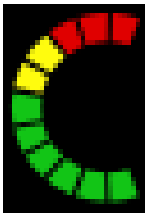

The ProSet helps the saw operator to ensure that the engine functions optimally.

4. ProSet operation

IMPORTANT

To use the ProSet, it is important to install and perform the initial start-up process, which involves mounting the control panel, connecting cables and sensors, and performing initial start-up settings (only the first time).

IMPORTANT

Before starting the sawmill, it is necessary to check whether the correct value of the distance from the sawmill bed to the **down-set tooth of the blade** is displayed on the lower indicator. If the value is not correct, you need to replace it with the correct one using the reference button . Do this checking only when turning on the ProSet.

Sawing start (before the log is turned over).

1. Fix the log to the frame of the band sawmill.

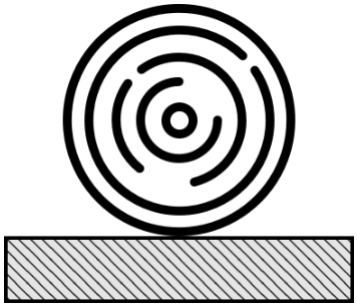

2. Using the buttons (or joystick) for raising and lowering the saw, set the saw to the place where the first "slab" will be minimal.

3. Press the button - "remember" the new height, i.e. the height on which the blade is now. The button tells the system to remember this “spot” and the ProSet will “count” the next places to cut from that point. The kerf thickness is always taken into account.

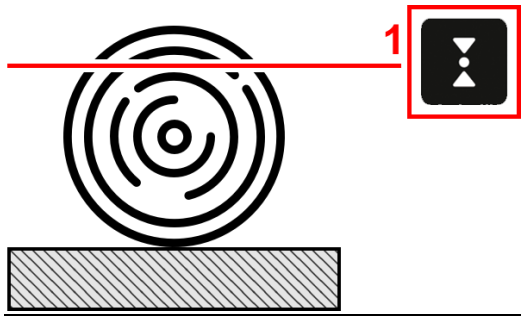

4. Make a cut.

5. Raise the saw over the cut and return the saw frame to its original position.

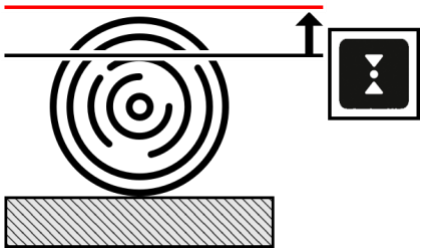

At the same time, the ProSet remembers where the previous cut was made.

6. Then type on the keyboard the required board size.

Then press the external Enter button or button located on the ProSet panel. The saw automatically moves to the next cut. You can only see it after the dot lights up and the animation occurs (as in the picture below).

And so on, starting from point 4.

For example, steps 1 - 5 are completed and you want to get the first board 31 mm thick. Press the “3”, “1”, “Enter” buttons sequentially.

The saw then automatically moves 31mm plus the kerf thickness below the previous cut place.

For the automated positioning of the sawing head, it is essential to maintain continuous pressure on the external 'Enter' button. This procedure guarantees a controlled and precise adjustment of the sawing head, in full compliance with established safety protocols and operational guidelines. Should the external 'Enter' button be released, the sawing head will cease its automatic positioning. To resume the automated movement, simply re-engage by pressing the external 'Enter' button.

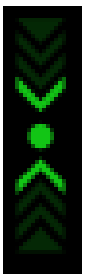

IMPORTANT

It is important to note that the act of cutting is **only permissible once the dot has blinked and become lit between the arrows**. Any attempt to cut before this point could result in injury or damage to the materials being cut. Therefore, it is essential to exercise caution and patience when using cutting tools to ensure safe and accurate cuts. Follow this sequence when cutting each board.

If the board thickness is already lit on the upper indicator, then it is enough to press once ↵ (or external 'Enter' button) to position the saw in the place of the next cut.

Sawing after turning the log

To reduce the log curvature by internal stresses when sawing the log into boards, after the log has been cut to one third of its diameter, it is usually turned over with the sawn side down and continued to be sawed from above. In this case, it is very important to determine the place of the first cut, taking into account all the thicknesses of the boards that need to be obtained, and all the kerf thicknesses.

Failure to locate the first cut will result in the bottom board being of the wrong thickness. **Such situation is unacceptable in modern enterprises that care about obtaining the maximum yield of suitable sawn timber.**

For example, you want to get next boards: 50, 50, 40, 25, 25 mm with the thickness of the kerf 2 mm. Then the height of the first cut from the sawmill table should be:

50+(50+2) +(40+2) +(25+2) +(25+2) =198 mm.

Below shown wrong chose of the place for the first cut.

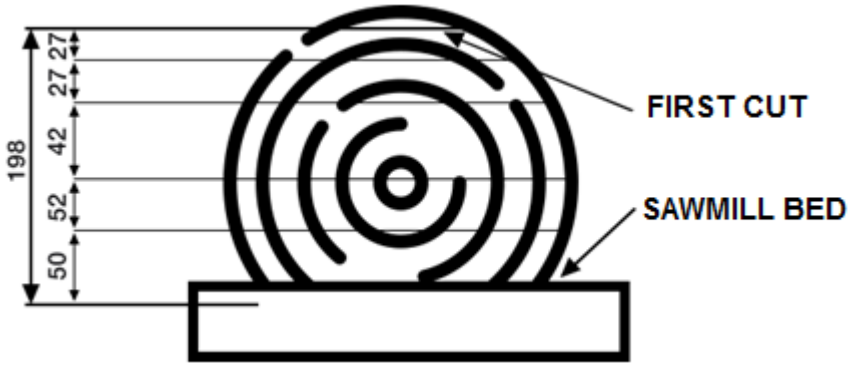

Below shown right chose of the place for the first cut.

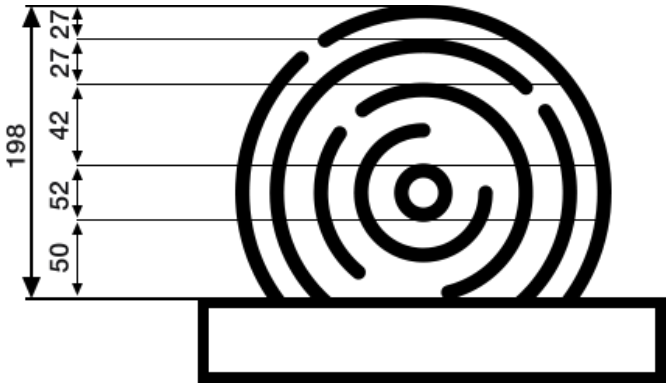

The ProSet allows you to locate the first cut right really easy.

This requires:

1. Using the buttons (or joystick) to move the saw up and down, set the saw approximately to the place of the first cut, i.e. to the place where the first "slab" will be minimal. At the same time, remember that the lower indicators show the distance from the saw to the table.

2. Enter on the keyboard the thickness of all the boards that you want to get in the order of their following from bottom to top. For example, enter:

50 × 2 + 40 + 25 × 2 ↵

After that, the sum of the entered board thicknesses, taking into account kerf thickness, is shown in the upper green line of the indicators. Press Enter button (or external Enter button) to move the saw automatically to the first cut place.

For the automated positioning of the sawing head, it is essential to maintain continuous pressure on the external 'Enter' button. This procedure guarantees a controlled and precise adjustment of the sawing head, in full compliance with established safety protocols and operational guidelines. Should the external 'Enter' button be released, the sawing head will cease its automatic positioning. To resume the automated movement, simply re-engage by pressing the external 'Enter' button.

3. Make a cut.

4. Raise the saw over the cut (in this case, the value of the next board thickness appears in the upper green line of the indicators), return the saw frame to its original position. The programmable “Bump Up” button also can be used for rising the sawhead.

5. Press the external ‘Enter’ button then the saw moves to the place of the next cut. Remember about constant pressing external ‘Enter’ button.

And so on, starting from point 3.

It is not always easy to calculate in your mind how many and what kind of boards thicknesses will come out of an existing log. In the process of entering the list, after each pressing of the + (plus) key, the green line of indicators displays the sum of the thicknesses of all entered boards, taking into account all the kerf thickness, which is very convenient for the operator of the sawmill.

After pressing x (multiply), the upper three-digit indicator shows the number of boards that can "fit" into the list, up to the height where the blade is, taking into account the previous boards that were entered and kerf.

In this example shown “5” boards can be added

To remove the last desk from the list press “-“ button.

Pressing the [/] (divide) button followed by a numerical value and then pressing Enter will create a board list, based on the height where the sawblade is located, and where each board is of the specified thickness, taking into account the kerf thickness.

For example, [/] 25 [↵] will make a list of boards with 25mm thickness each taking into account kerf from the height where the blade is located.

You can also use the "quick list". It is enough to move the sawblade to the place of the first cut and press, for example, S2 (that is related to 2 quick list) once to call up the quick list, see fig. below.

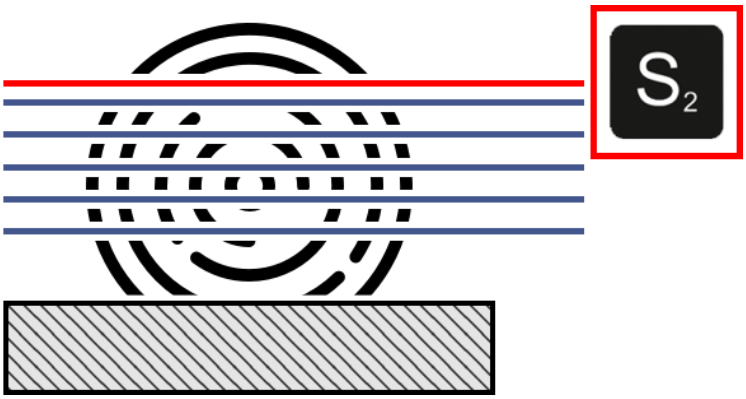

The system itself will break the thickness of the log from the bed to the saw (bottom to top) into dimensions that were saved in the list under S2. In this example, 100mm from the bottom, and then 33mm boards to the height where the sawblade is, taking into account the kerf thickness.

5. Settings table

For the convenience of work operator can tune ProSet for required needs.

For example, if the sawmill is manual ProSet can be set for manual mode. The first step is to press the settings button until the letter "F" appears on the display. Next, enter the number "21" and press the Enter button. Once this step is complete, the cursor will appear on the display. The user should enter "1" and press the Enter button to set the sawmill to the desired configuration.

The system might require a code (done so that the sawmill operator cannot change the settings uncontrollably), see fig. below.

Code is 3068.8

IMPORTANT

DO NOT CHANGE F92/F98 SETTINGS IF YOU ARE NOT 100% SURE YOU NEED TO CHANGE THEM!!!

Purpose	Setting number
The time (sec.) that the saw head may not move after the command, before showing the error.	F 1
Relays reverse. Changes the sawhead movement direction when using arrows located on the ProSet panel.	F 12
Encoder reverse (displacement sensor).	F 14
Bottom Up mode - On / Off. When moving to the cutting place from top to bottom, the saw first passes the place, and then rises up	F 15
Bottom Up distance in mm.	F 16
Turn On and vice versa smart sensor notifications (18, 19 errors and warnings). In other words, turning On/Off of displaying 18,19 errors and vice versa.	F 19

Choosing movement type: 0 – automatic mode using relays, 1 – manual mode	F 21
Value for configuring reverse contactors distance. Distance on which error 12 is not appearing.	F 22
Set mode of the ROBO button. 1 – Calibration. 2 – Add height as the first board into the boards list. 3 – “Go home” mode. 4 – S5 mode. 5 – Bump up above first cut.	F 23
Set nominal current value of the AC cutting motor.	F 24
Positioning accuracy. Accuracy of setting the saw to size.	F 25
Set height for positioning when ROBO button works as GO HOME button.	F 27
Set distance when ROBO button works as bump up button.	F 28
Programming the bump up button.	F 30
The distance for the saw bumps up.	F 31
Light all display for 5 seconds.	F 32
Factory setting.	F 34
Save user settings in memory.	F 37
Load user settings from system memory.	F 38
Show device serial number.	F 40
Show program version.	F 41
Show time before blocking. If "oooo", then the system is unlocked forever.	F 42
Unlock your device with demo mode. After entering this mode for 5-7 seconds. 5-digital serial number will be displayed.	F43
Distance near height for positioning on which second speed is turning off (in mm.)	F 47
On / off clamping of external buttons for operation (if off - just press once)	F 49
Show total running time in hours	F 70
Change min. coordinate (virtual limit switch)	F 82
Change max. coordinate (virtual limit switch)	F 88
Calibration	F 90
Show min./max. coordinates	F 94
Determination of the coefficient of the encoder (displacement sensor) and setting the min./max. virtual limit switches	F 92/ F98

For example:

In order to switch to automatic mode, perform F 21 = 0. To switch to manual mode perform F 21 = 1.

In order to not long-press external buttons for automatic positioning perform F 49 = On. We recommend using long-press for safety measures.

In order to set the distance on which sawhead should rise in bump-up mode, perform F 31 and enter the distance. For example, F 31 = 50, and sawhead will rise 50mm regarding the programmed place.

6. Error codes and troubleshooting

Number	Description
00	This error code indicates a low voltage supply to the control panel. It briefly activates when the device is powered off, or when there is a loss of voltage from the power supply. Please ensure the following: - Verify that the electricity supply is active and uninterrupted. - Inspect the power supply connector to ensure it is securely plugged in and not intermittently disconnecting due to vibrations. - Examine the power supply cable for any signs of damage or breakage.
01	The system received a command to adjust the sawing head to a specific height, but the ProSet failed to receive feedback from the sensor (encoder) indicating movement, or the saw head is not moving up or down as expected. To address this issue, please follow these steps: - Refer to Section 2, "Instructions for Checking ProSet Connection and Troubleshooting Tips," in the instruction manual for detailed guidance. - Consider adjusting the parameter in F00 to 5. This change might be necessary for proper system response. Additionally, ensure that the system is correctly connected and verify the proper functioning of the lifting mechanism. This comprehensive check is crucial for diagnosing and resolving the issue effectively.
02	Upon receiving the command, the system encountered a failure, unsuccessfully attempting 10 times to position itself accurately for sawing. To resolve this error, consider the following actions: - Adjust the F25 parameter to 0.9 enhance the positioning accuracy of the system. - Set the F15 parameter to 'On' to enable the 'approach from below' feature. - Modify the F16 parameter to 18mm to optimize the distance for approaching from below. - Conduct a calibration process using the F90 parameter to ensure the system is accurately aligned and functioning. - Thoroughly check the mechanisms responsible for lowering and raising the saw to ensure they are operating correctly.

	- Inspect the power supply connector to ensure it is securely plugged in and not intermittently disconnecting due to vibrations. - Confirm that the sensor (encoder) wire is correctly connected and functioning. - Check if the pin showed on the picture below is properly installed and sensor (encoder) shaft is properly fixed with it. 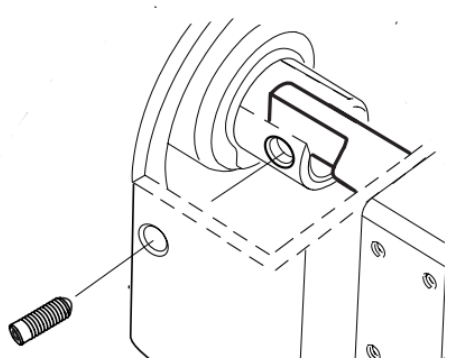 - The height adjustment mechanism's chain must be tensioned to ensure good lift mechanism function. 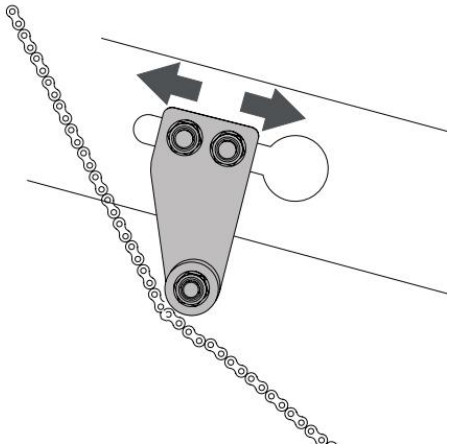
12	This error indicates that when the sawing head is moved upwards, the system erroneously displays a decrease in the distance between the blade and the sawmill sawtable. To address this discrepancy please consult Section 2, titled "Instructions for Checking ProSet Connection and Troubleshooting Tips," in the instruction manual. This section provides detailed guidance for diagnosing and rectifying issues related to the ProSet connection and other relevant system components.

15	This error occurs exclusively when an attempt is made to modify the F16 value while the F15 parameter is set to 'Off'. To rectify this, you must first change the F15 parameter to 'On'. This action will enable the adjustment of the F16 value, ensuring proper functioning and compliance with the operator's requirement.
17	There is no entered value for moving up using the bump-up button. Works only when F 30 = 3.
18	The sensor is not connected correctly. Check the connection. Possible problem with improperly installed sensor board. If so, then you need to unscrew the sensor board and screw it again so that the board fits snugly against the sensor body.
19	This error indicates a disruption in communication with the sensor lasting more than 5 seconds, which may be due to several factors: - Ensure that the sensor wire is correctly and securely connected to the ProSet panel. This connection is crucial for the sensor's operation. - Carefully check the wire connection and for potential damage. It is recommended to thoroughly inspect the cable to ascertain any breaks or faults. - Inspect all connectors inside the ProSet panel to ensure they are properly connected. A loose or incorrect connection here can cause communication issues with the sensor. - Examine the connection of the wire to the sensor's printed circuit board (PCB). It is advisable to check this connection to confirm it is intact and secure. - Consider the possibility that the sensor board itself may be out of order. This would require further inspection or testing to confirm.
84	This error code indicates an overload of the main cutting AC motor. Addressing this issue is crucial, as a persistent overload can lead to permanent damage to the motor or significant degradation. To rectify this error, follow these steps: - Ensure that the F24 parameter is set correctly. - A dull blade requires the motor to work harder, which can cause overload. Sharpening the blade can reduce the motor's load. - Slowing down the power feed speed can lessen the strain on the motor.

	- Verify that the voltage supply is not too low. Insufficient voltage can cause the motor to overwork, leading to an overload condition. Continuous overloading can cause irreversible damage and affect the longevity and efficiency of the motor.
92	This error code indicates that the ProSet system received an instruction to position the saw head below the minimum allowable height. When this error occurs, the ProSet will also display the minimum acceptable value for reference. This feature is designed to prevent operation outside of safe or intended parameters, ensuring both the safety of the operator and the integrity of the equipment.
98	This error code indicates that the ProSet system received an instruction to position the saw head above the maxim allowable height. When this error occurs, the ProSet will also display the maximum acceptable value for reference. This feature is designed to prevent operation outside of safe or intended parameters, ensuring both the safety of the operator and the integrity of the equipment.
99	System failure. You need to contact the service.

Possible questions / problems and troubleshooting

We have noticed the most frequently asked questions and misunderstandings in the use of our devices.

90% of all problems are resolved by **correct** system settings.

Perform "**Instructions for checking ProSet connection and troubleshooting tips".**

1. What if the values on the red indicators do not change when the saw frame is moved?

Key aspects to consider include:

- Is the contact between the sensor and its connection point secure and intact?
- Are there any signs of wire damage or breakage?

Check if the pin showed on the picture below is properly installed and sensor shaft is properly fixed with it.

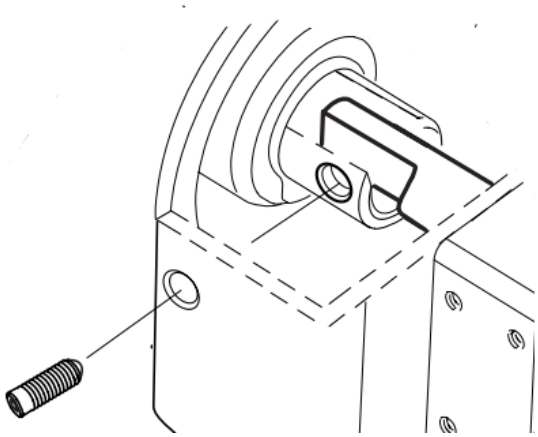

Ensure that the bracket supporting the sensor is securely and firmly installed. It is crucial that there is no movement or instability in the bracket, as this can affect the sensor's performance.

Examine the alignment of the sensor shaft meticulously. Confirm that it is properly aligned in accordance with the system's specifications. Any misalignment can lead to inaccurate readings and operational issues.

2. **Delays in sawing head reaching required height. The system often 'misses' the correct place for a sawing head stop.**

First you need to carry out the “CALI” or F 90 setting.

Should the initial issue persist, consider adjusting the positioning accuracy. For instance, modifying the parameter F 25 to a value of 0.9 may provide more precise control.

In cases where the problem continues, implement the following settings: Set F 15 to 'On' and adjust F 16 to 15mm. After applying these changes, evaluate the ProSet performance to determine if the issue has been resolved.

Check if the pin showed on the picture below is properly installed and sensor (encoder) shaft is properly fixed with it.

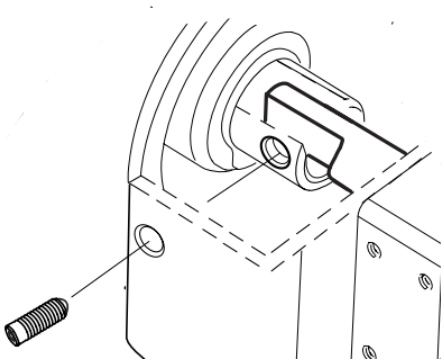

The height adjustment mechanism's chain must be tensioned to ensure good lift mechanism function.

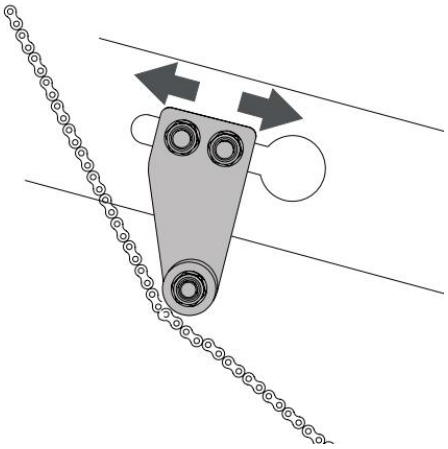

Note: It is essential to monitor the system's response after each adjustment to identify the most effective solution.

3. **The values of the red indicators do not correspond to the distance from the down-set tooth of the blade to the sawtable. The system worked correctly for a while, but now sawing head cannot be positioned accurately using the ProSet.**

The first thing to do is to check the accuracy of the encoder (displacement sensor). To do this check the actual distance from the sawmill bed (or "0") to **the down-set tooth of the blade** in mm. Set the correct distance value using button. Move the saw to a different distance, this can be done several times (up - down) by using GOTO

button. Measure the actual distance from the sawmill bed to **the down-set tooth of the blade** in mm and compare it to the value shown on the ProSet display.

If the indicators show an incorrect value - this is possible due to:

- The height adjustment mechanism's chain must be tensioned to ensure good lift mechanism function.

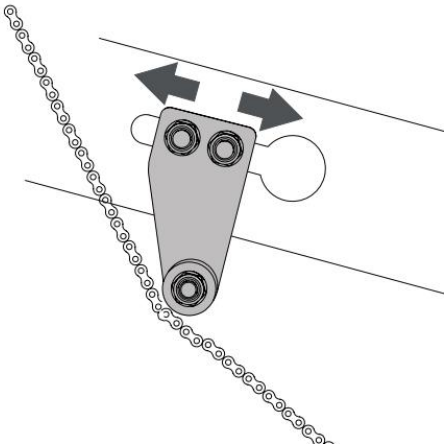

- Settings F 92/98 could be done incorrectly;
- Check if the pin showed on the picture below is properly installed and sensor shaft is properly fixed with it.

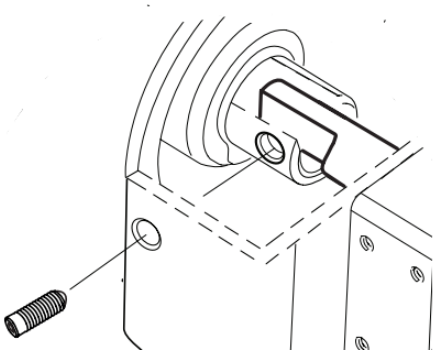

- Ensure that the bracket supporting the sensor is securely and firmly installed. It is crucial that there is no movement or instability in the bracket, as this can affect the sensor's performance;
- Examine the alignment of the sensor shaft meticulously. Confirm that it is properly aligned in accordance with the system's specifications. Any misalignment can lead to inaccurate readings and operational issues;
- Check contact of the encoder wire connectors;
- broken encoder wire;
- malfunctions of the device controller or encoder;

4. **The saw head does not move after the command. When I enter the board thickness and press Enter, the system does not move, but beeps and shows an error. What's the matter?**

For the automated positioning of the sawing head, it is essential to maintain continuous pressure on the external 'Enter' button. This procedure guarantees a controlled and precise adjustment of the sawing head, in full compliance with established safety protocols and operational guidelines.

Perform “Instructions for checking ProSet connection and troubleshooting tips”.

Check if the saw head moves when the EasySet’s Up / Down buttons are pressed.

5. **The board that I cut has the wrong thickness. What to do?**

Check the accuracy of the positioning using the GOTO function. Check if inaccuracy grows during positioning using the GOTO button.

Check if the pin showed on the picture below is properly installed and sensor shaft is properly fixed with it.

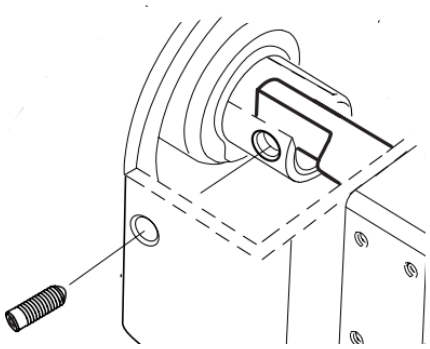

The height adjustment mechanism’s chain must be tensioned to ensure good lift mechanism function.

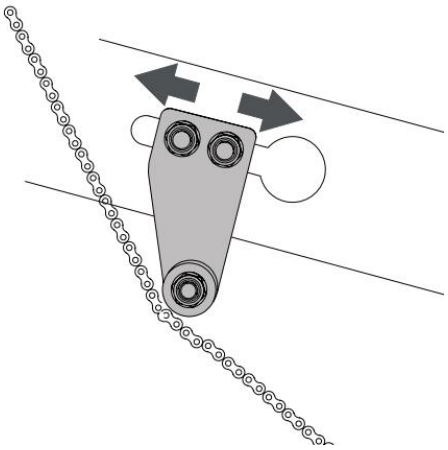

If inaccuracy grows – F 92/98 settings were made incorrectly. If the inaccuracy constant – correct the distance from the sawtable to the **the down-set tooth of the blade** using the reference button .

Inspect the kerf parameter to ensure it is set correctly. The kerf setting can significantly impact the thickness of the cut. Usually, 3mm kerf can be used for most of the times.

Confirm that the saw table is properly adjusted. An improperly aligned saw table can lead to inaccuracies in board thickness.