LOGOSOL

USER MANUAL

Ref. no. 0458-395-0661

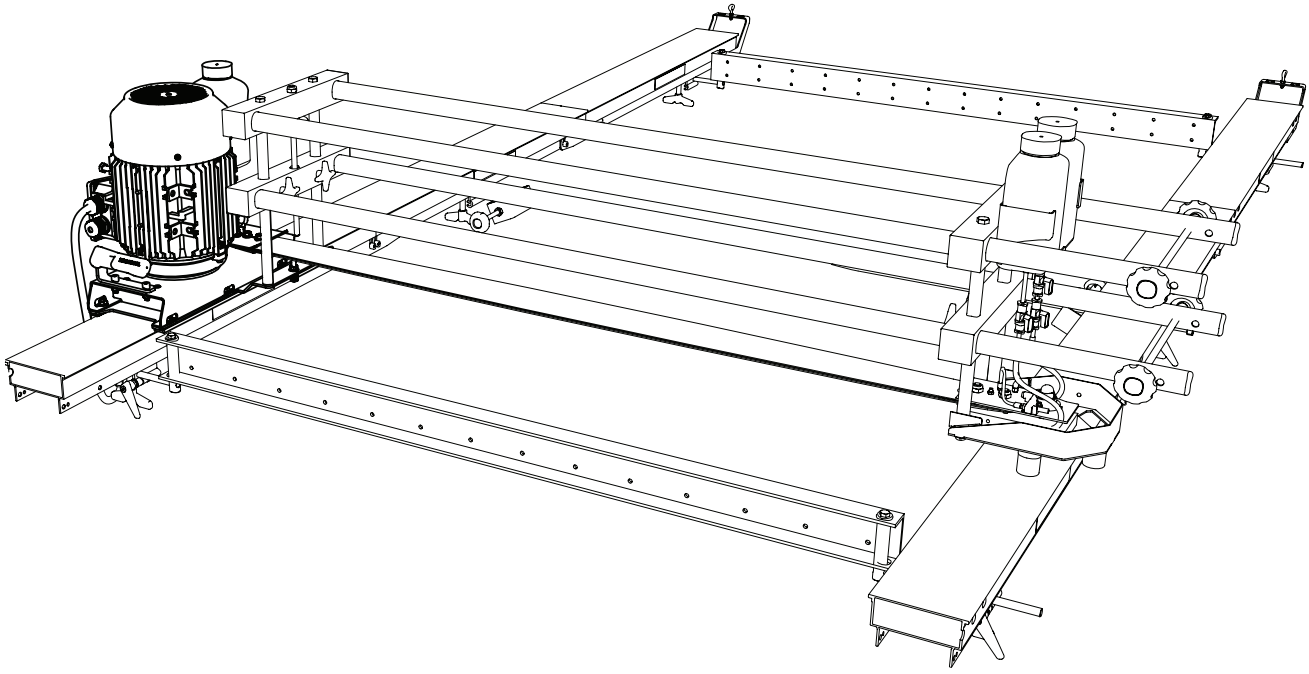

LOGOSOL ES8 WS

EN

THANK YOU FOR CHOOSING A LOGOSOL MACHINE!

We are very pleased that you have demonstrated your confidence in us by purchasing this saw unit, and we will do our utmost to meet your expectations.

Logosol has been manufacturing sawmills since 1989. In that time we have supplied approximately 50,000 machines to satisfied customers the world over.

We care about your safety as well as we want you to achieve the best possible results with your sawmill. We therefore recommend that you take the time to carefully read this user manual from cover to cover in peace and quiet before you begin using the saw. Remember that the machine itself is just part of the value of the product. Much of the value is also to be found in the expertise we pass on to you in the user manuals. It would be a pity if that were not utilised.

We hope you get a lot of satisfaction from the use of your new machine.

Bengt-Olov Byström
Founder and chairman,
Logosol in Härnösand, Sweden

Read through the user manual carefully and make sure you understand its contents before you use the machine.

This user manual contains important safety instructions.

WARNING! Incorrect use can result in serious or fatal injuries to the operator or others.

CE

LOGOSOL continuously develops its products.
For this reason, we must reserve the right to modify
the configuration and design of our products.
Document: Logosol ES8 WS User Manual
Manual, ref. no.: 0458-395-0661
Text: Martn Söderberg, Robert Berglund
Illustrations: Martin Söderberg
Last revised: October 2021
© 2021 LOGOSOL, Härnösand Sweden

TABLE OF CONTENTS

Safety instructions	4
Machine description	6
Components of the electric chainsaw	7
Technical data	8
Component parts: on delivery	9
Assembly	12
Features	22
Exploded view	24
Electrical system	25
Troubleshooting	26
Cutting equipment	27
Sawing: tips and advice	28
Precision	29
Drying the wood	30
Declaration of conformity	31

SAFETY INSTRUCTIONS

- Read the entire manual carefully before the electric chainsaw is put into operation. Failure to comply with safety regulations may result in danger to life.
- Make sure that everyone working with the electric chainsaw is well acquainted with the risks and has read the manual. The manual should always be available to all those working with the electric chainsaw. This applies also if the sawmill is lent or sold.
- Also read the manual and safety instructions for the sawmill.
- Minors under the age of 18 are not allowed to use the electric chainsaw.
- Children and animals must not be near the sawmill during operation.
- Respect the safety distance due to loud noise and the risk of the chain being thrown out in the direction the bar is pointing in the event of a chain break.
- Anyone working with the electric chainsaw should be in good physical shape, healthy and well-rested. Have regular work breaks. Do not work under the influence of alcohol, drugs or medicines that may cause drowsiness or inattentiveness.
- Work with the electric chainsaw should always be carried out under good visibility. Do not work in the dark and neither with reduced vision.
- Make sure there are other people within earshot in case you need help.
- Use only LOGOSOL manufactured products or those expressly approved for the purpose when adding extra equipment . Other equipment may result in risk of accident and must not be used. LOGOSOL disclaims any liability for personal or property damage incurred during the operation of the sawmill with an unauthorised addition.
- Always wear personal protective equipment: Appropriate clothing is a tight-fitting work overall. Never work with loose clothing, jacket or similar.
- Wear steel cap shoes and deep tread sole for good grip. Do not wear a scarf, tie, jewellery or the like that can catch in the equipment.
- Never reach over or under the guide rail during operation. Rotating cutting equipment. Risk of cuts!
- Wear heavy duty protective gloves. Risk of cuts when handling the bar and saw chain. The cutting equipment can also be hot immediately after sawing.

Key to symbols

For your own safety, read through the entire user manual carefully and do not start the machine before you have understood everything.

Use approved ear protectors and protective eyewear. Hearing can be damaged even after short periods of exposure.

Sharp rotating tools. Make sure that your fingers never come near the cutting tools.

This symbol means 'WARNING'. Pay particular attention where this symbol appears in the manual text.

This symbol is followed by instructions that must be observed. Pay particular attention where this symbol appears in the manual text.

SAFETY INSTRUCTIONS

Safety distances

Respect the safety distances. The safety distance is 8 m for the operator and 15 m for persons other than the operator. The illustration below shows the sawmill from above. The operator is to remain within the area marked with a dashed line (- - - -) when the saw is in operation. The operator is not to stretch over the guide rail when the sawmill is in operation.

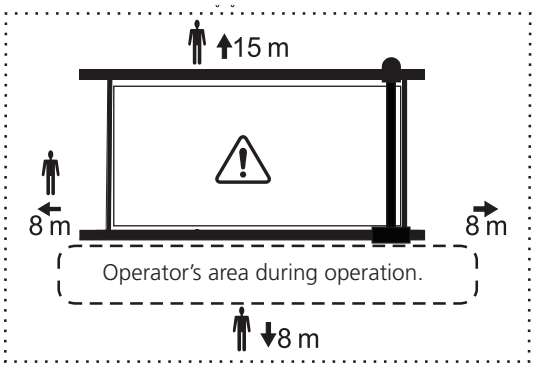

Increased throw-out risk! Never use a chain sharpened for rip sawing when cross cutting.

Before each work period

- Check all bolted joints and locks, and that all the moving parts of the sawmill move freely and smoothly.
- Check that the sawmill is firmly secured to the log ends.
- Check that the cutting equipment is correctly assembled. Risk of chain breaks!
- Check that saw unit is pushed fully into position on the guide rail. Throw-out risk on start up!

During operation

The sawmill is not to be in any other position than level when in operation.

Be careful where your hands are placed when repositioning the guide rail holders when preparing for the next cut. Risk of crushing!

During operation, always stand behind the saw unit, seen from the sawing direction. A chain that breaks can be thrown out through the sawdust outlet.

- Keep the worksite free of tools, pieces of wood, sawdust and other items you can trip on.

Turn off the saw unit after each cut. Never leave the electric saw unattended such that unauthorized persons can start it.

If any kind of malfunction occurs, stop sawing immediately and turn off the saw unit until the problem has been resolved. Always keep this in mind. Most accidents with dangerous machines, both the electric saw and other machines, happen when something goes wrong and the operator attempts to fix it while the machine is still running. A stop seldom shows up on the finished product.

MACHINE DESCRIPTION

- The Logosol ELECTRIC SAW ES8 WS is a chainsaw intended for use on the Logosol sawmill Big Mill Wide Slabber.
- The sliding elements that fit on the sawmill beam are integrated in the construction. The saw is powered by an electric motor that transmits the power to the chain via a belt transmission.
- The ELECTRIC SAW ES8 WS is equipped with a mechanical pump, which supplies the bar with chainsaw oil.
- The low friction plastic sliders last for several years thanks to the smooth surface of the aluminium components.

Maintenance

To ensure good function, check the operation of the machine according to the following instructions:

Check the following before each job:

Check the condition of the bar and saw chain.
Check level of the chainsaw oil.
Clean the saw.

Every 10 hours of operation:

Check sliding strips/guides for wear.
Check the plastic gear in the oil pump.
Clean the oil system (from bottle to bar) with compressed air, e.g.

Every 20 hours of operation:

Check the oil pump bearing.
Check the round belt that drives the oil pump.
Clean the water cooling system (from bottle to guide bar) with compressed air, e.g.
Check the condition of the belt transmission.

Item no.	Ref. no.	Qty.	Description
21	03-03240	3	
20		3	MF6S M8x25 DIN 7991 8.8 fzb
19		1	M6S M8x55 8.8 fzb DIN 933 H
18		1	(8001-300-0316)
17		1	MF6S M10x20 8.8 fzb
16		3	MK6S M8x35 ISO 7380
15		4	MC6S M8x20 8.8 fzb DIN 912
14		1	MC6S M8x55 8.8 fzb DIN 912 fully threaded
13		2	M6MF M8 8 fzb DIN 6923
12		4	MF6S M6x16 DIN 7991 8.8 fzb
11		1	SK6SS M8x10 45H DIN 916
10	04-00416	1	
9	03-02929	1	
8	03-03017	1	
7	03-03019	3	
6	03-02886	1	
5	03-02794	1	
4	01-00670	1	
3	01-00578	1	
2	01-00579	1	
1	01-00671	1	

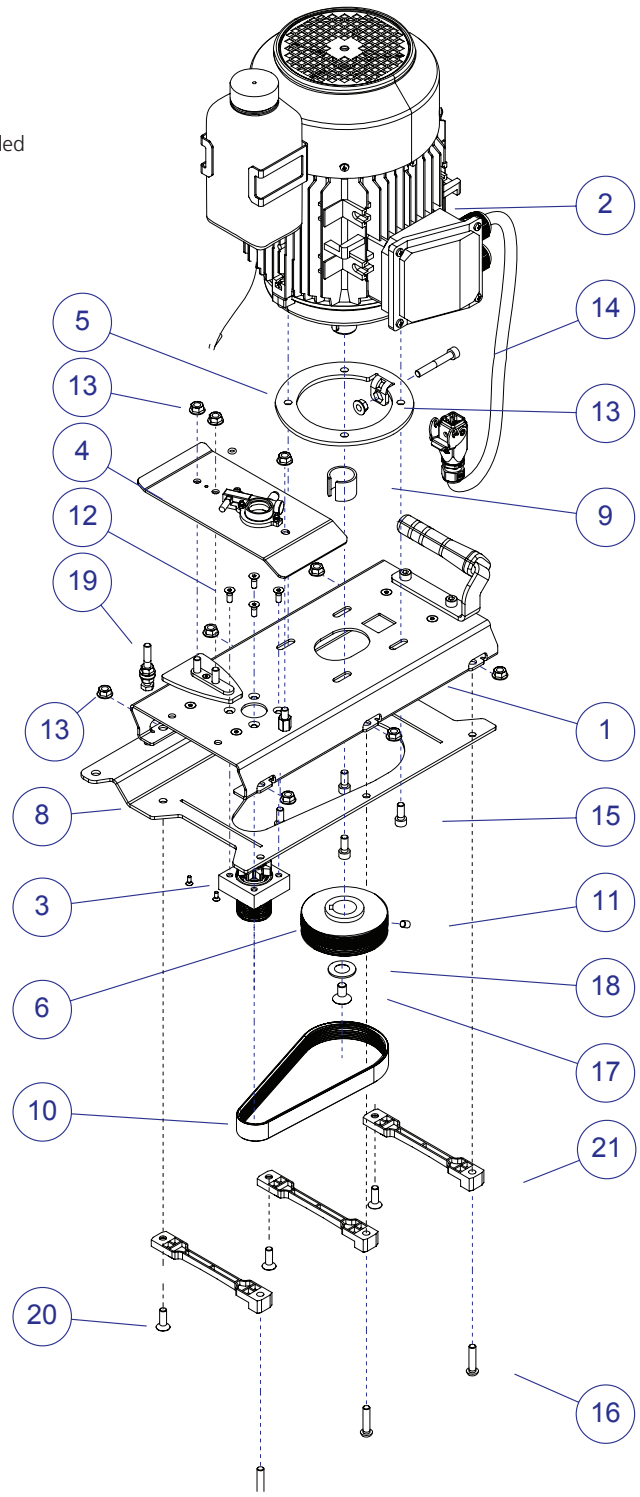

Exploded view

TECHNICAL DATA

POWER	
Rated power ES8 WS	8 kW
TRANSMISSION	
Poly-V belt (10 PJ 610)	Max. belt tension: 290 N, Percent elongation: 0,29
Chain speed	18.5 m/s
NOISE LEVELS	
Sound pressure, unloaded	97.0 dB(A)
Sound pressures, loaded	102.0 dB(A)
Sound power level	113.0 dB(A)
DIMENSIONS	
Height	410 mm
Length	425 mm
Width	410 mm
Weight	38/42 kg
ELECTRICAL SYSTEM	
Power supply	50 Hz 400 V 16 A
Enclosure rating	IP 54
Electrical connection	CEE system (round plug) 16A, with inverter

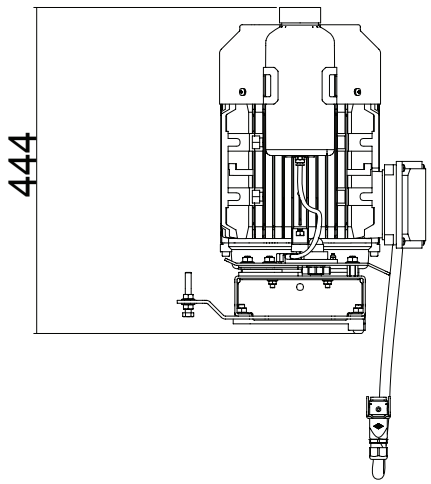

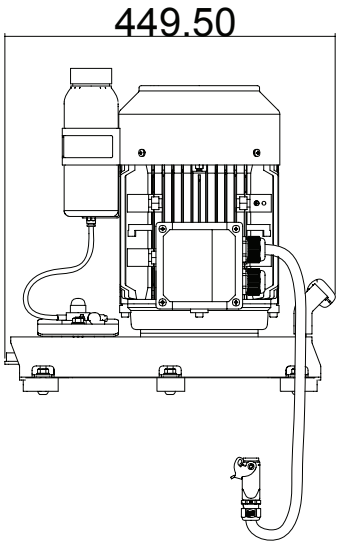

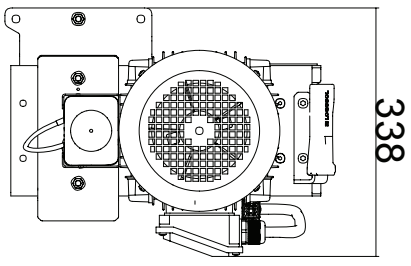

00-00108

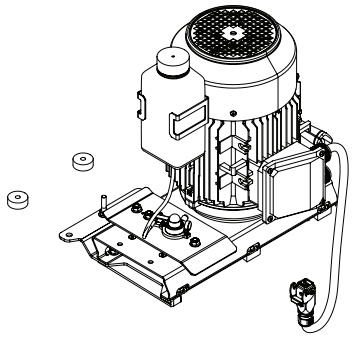

— 1x ——— 3671-000-0177 (66)

5000-000-0012 (56)
5000-000-0003 (66)
5000-000-0014 (84)

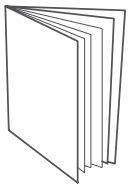

Manual

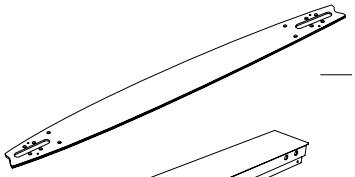

— 1x ——— 3010-066-0168

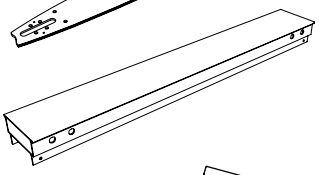

— 6x ——— 4525-010-2110

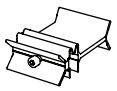

— 4x ——— 4525-001-2090

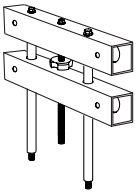

— 1x ——— 4920-001-0080

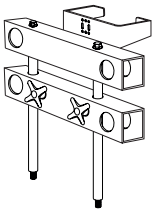

— 1x ——— 4920-001-0090

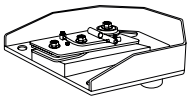

— 1x ——— 4920-001-0065

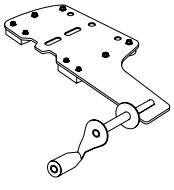

— 1x ——— 4920-001-0100

5000-000-0012 (56)
5000-000-0003 (66)
5000-000-0014 (84)

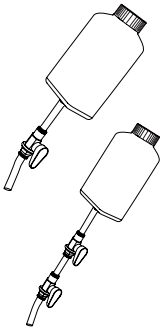

— 1x — 4920-001-0255

— 1x — 4920-001-0250

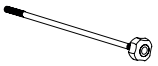

— 2x — 4920-001-0650

— 4x — 4920-001-0666 (66)

— 1x — 3671-000-0177 (66)

— 1x — 3671-301-0300 (66)

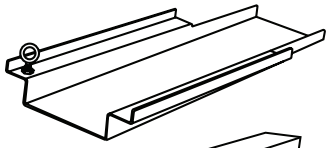

— 2x — 4920-001-0440

— 1x — 4920-001-0435
520x55x20

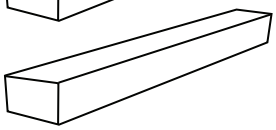

— 1x — 4920-001-0436
520x75x20

— 1x — 4920-001-0070

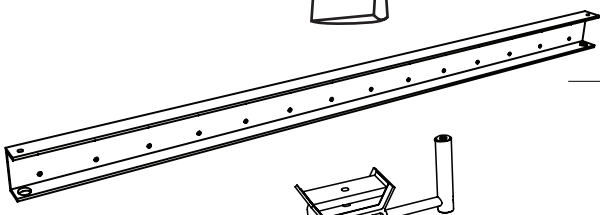

— 2x — 4920-001-0070

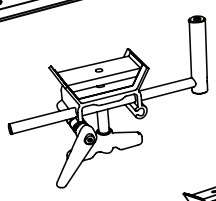

— 4x — 4920-001-0460

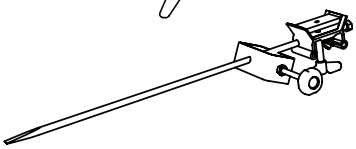

— 1x — 4920-001-0070

BOLTS & NUTS

Definition of fasteners.

Shoulder bolt

Phillips bolt

Slotted bolt

Set screw

Hex nut

Flange nut

Flat washer

Allen bolt

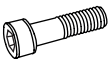
Partial thread Allen bolt

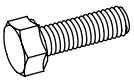
Hex bolt

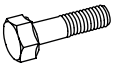
Partial thread hex bolt

Flange bolt

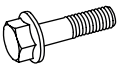
Partial thread flange bolt

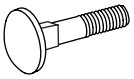
Carriage bolt

ADDITIONAL SYMBOLS

The following symbols are used as supplements to the symbols above to describe the design or function of the fasteners.

Low

Tensilock

Lock

Countersunk

DIAMETER & LENGTH

The size of a fastener is written as a diameter measurement **(M)** ISO 68-1. For bolts, this is followed by a length measurement. The length of the bolt is measured from below the head to the tip of the bolt.

(Diameter)		**(Length)**
M8	x	20

1

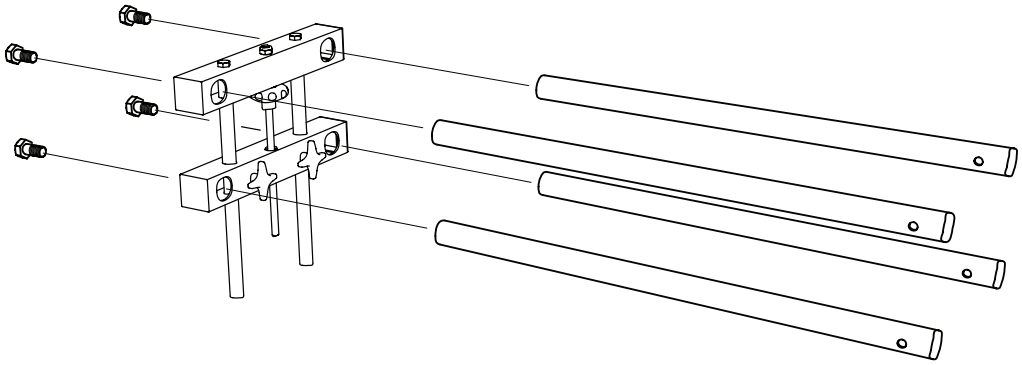

4 x – M8x20

2

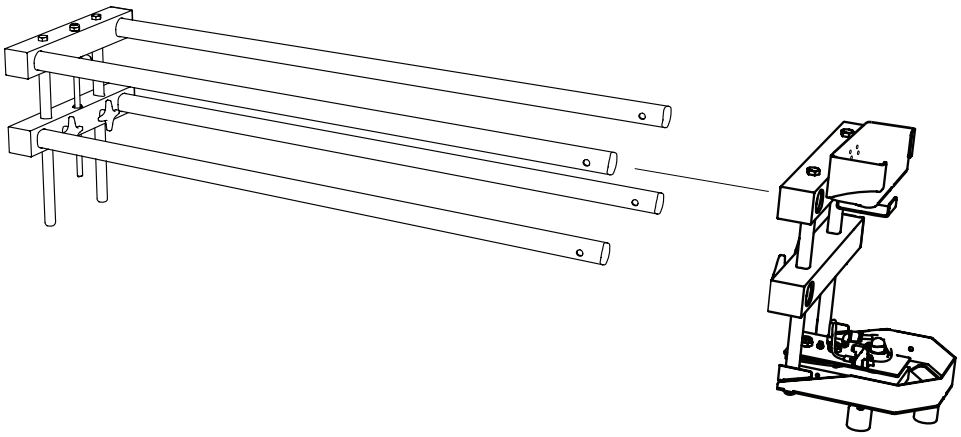

3

– 2 x – M8

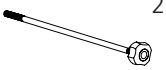

2 x – M8

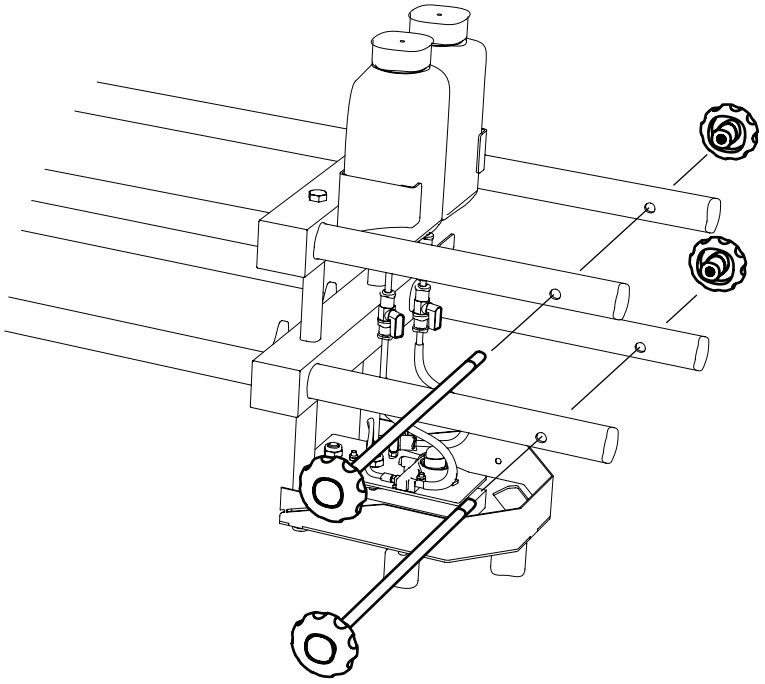

4

2 x – M10

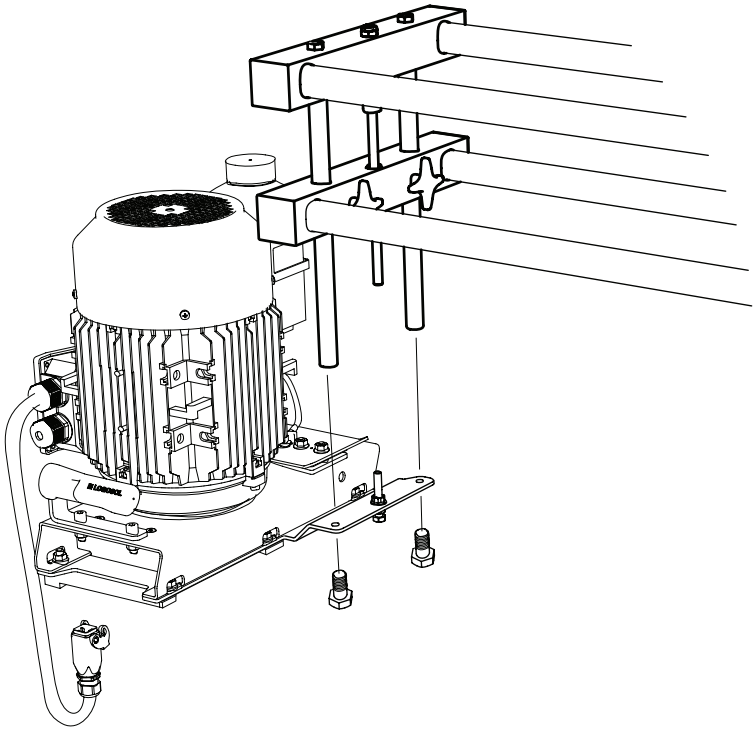

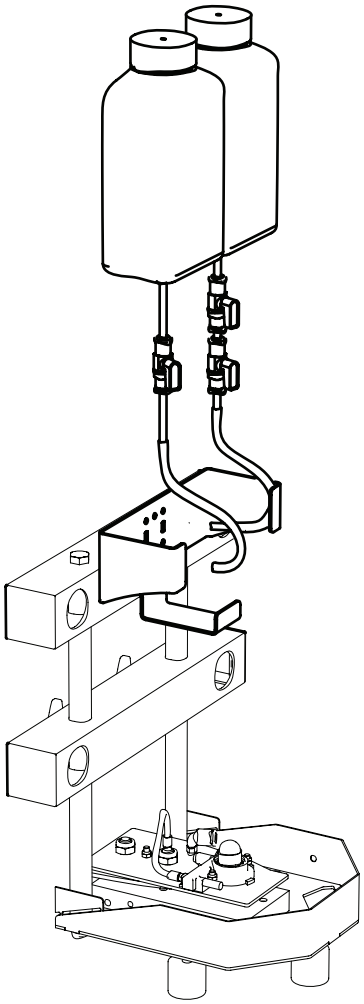

Connect the bottles to their respective valves. Note that the water bottle has two valves, one for adjusting the flow and one for turning the flow on or off. The oil bottle is to be connected to the oil pump.

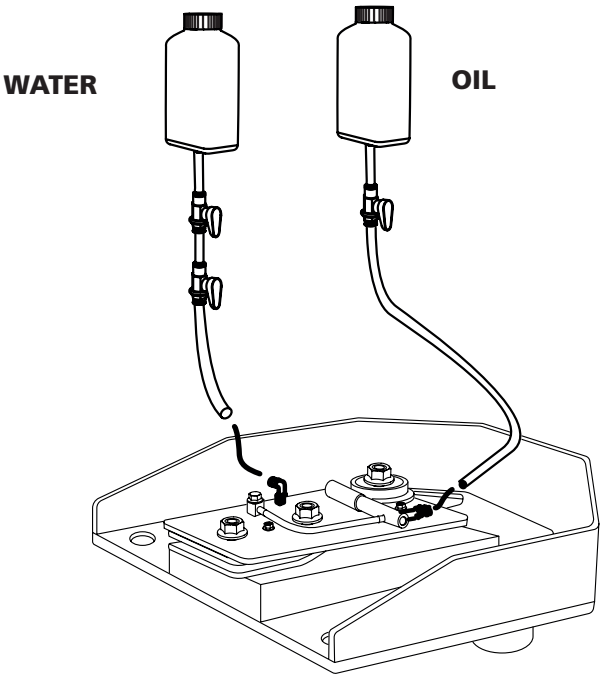

MOUNTING THE GUIDE RAIL PACKAGE TO THE LOG

1

Draw a line to mark the first cut on the log. Note that the line will be used for positioning the guide rail holder. The actual cut will come 50 mm above the line.

2

Screw the guide rail holder to the log end so that its upper edge touches the line.

3

Install the guide rail supports.

4

Fit the guide rails to the guide rail supports.

5

Secure the guide rails.

6

The guide rails can be adjusted in or out, to adjust the parallelity between them.

7

Fit the plate, together with its eyebolt, to the guide rail. Note that the eyebolt should be located on the "outer side" of the guide rail. Repeat the assembly on the other guide rail.

8

Thread the feed line through the eyebolts.

9

Fasten the feed line to the bar nose carriage.

10

Now, you can make the first saw cut.

11 TIP!

You can make saw templates of different sizes to facilitate when repositioning the guide rail holders for the next cut.

12

Place a saw template below the guide rail holder, and then fasten the aluminium angle iron under the lower edge of the template.

13

Remove the saw template and loosen the screws that hold the guide rail holder. When the guide rail holder has been lowered down to the aluminium angle iron, you fasten it for the next cut. Repeat all the steps at the other end of the log.

14

Now you can make the next cut.

15

By repeating the steps 12-15, you can cut up the log into the desired number of boards and dimensions.

MOUNTING THE GUIDE BAR

Make sure the power supply is cut. Loosen the bar nuts and lift off the guide bar plate. Put the bar and chain in place and reinstall the guide bar plate. Check that the guide bar is resting against the spacers and that it is not jammed up with wood chips or by the chain tensioner. Also check that the chain is turned the right way round and that it lies firmly against the whole sprocket.

Pull the chain around by hand before starting the machine to make sure it is correctly installed.

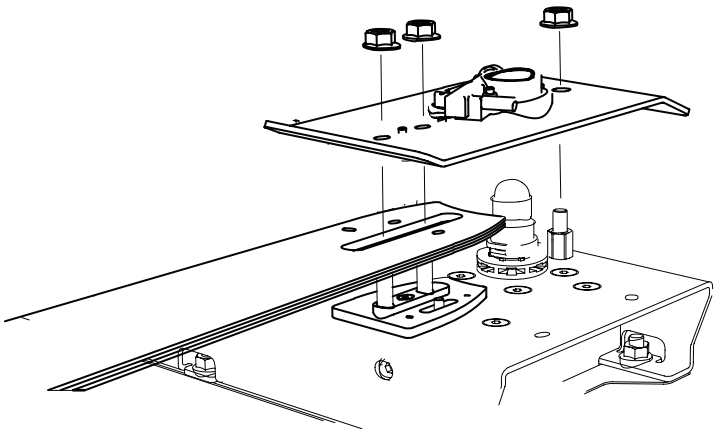

MOUNTING THE BAR NOSE

1

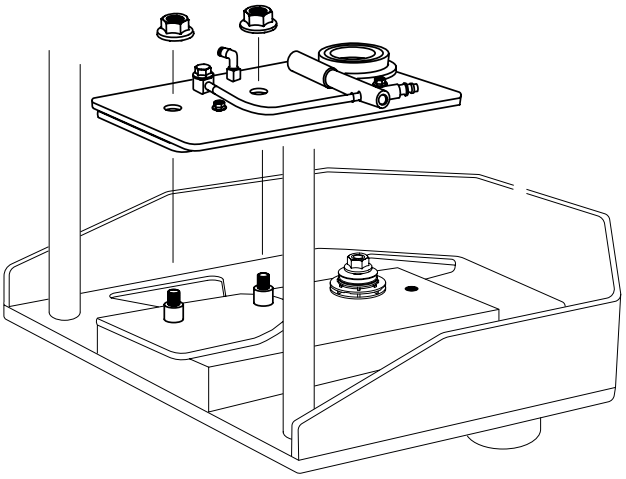

2

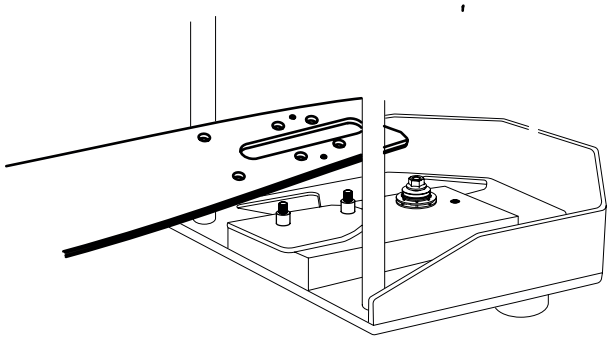

3

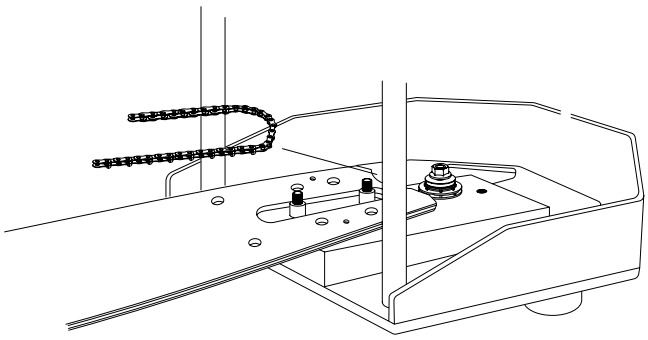

4

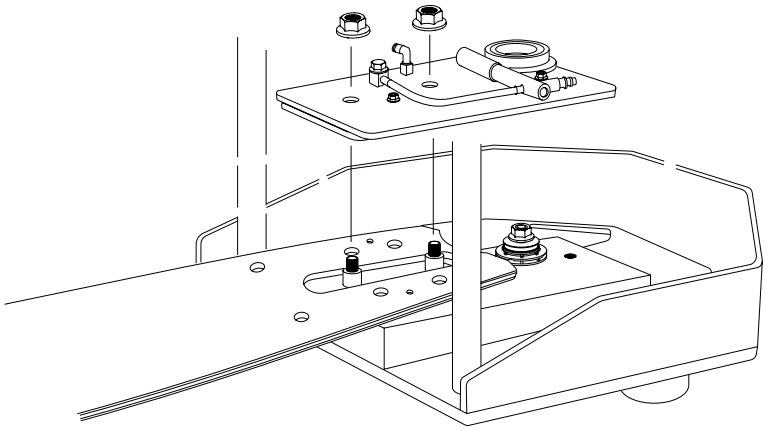

FEATURES

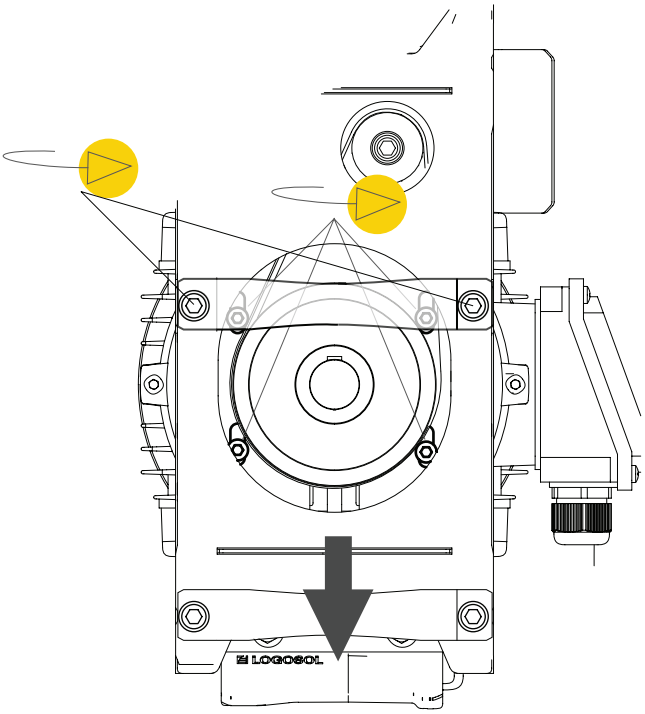

BELT TENSION

Normally, a multi-V belt lasts for many years of use, but after a time of service it may need to be tightened so as not to slip when sawing. In order for the belt to last as long as possible, it should be tightened until it just grips but no more.

Do as follows: Tilt the saw and remove the middle sliding strip. Loosen the motor securing bolts. Loosen them as little as possible to free the motor. Then, adjust the belt tension using the adjusting bolt on the end of the machine. Tighten the motor securing bolts firmly after completing the adjustment.

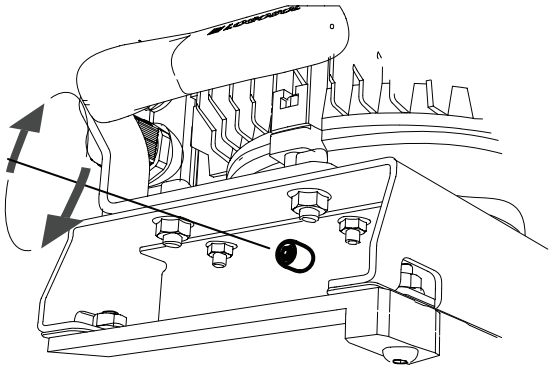

FEATURES

CHAIN TENSION

Make sure the power supply is cut. Loosen the tensions on the cross bars (1). Then, slightly loosen the two nuts holding the guide bar. The chain is tightened by using a screwdriver between the guide bar and the bar nose plate (2). Do not tighten the the chain too much. You should easily be able to pull the entire drive link out of the guide bar groove using your thumb and forefinger. If the chain is tightened too much, it will lead to increased wear on both the chain and the guide bar. Retighten the guide bar nuts once the chain tension is correct. Then, set the angle of the guide bar by adjusting the bar nose plate angle to the bars.

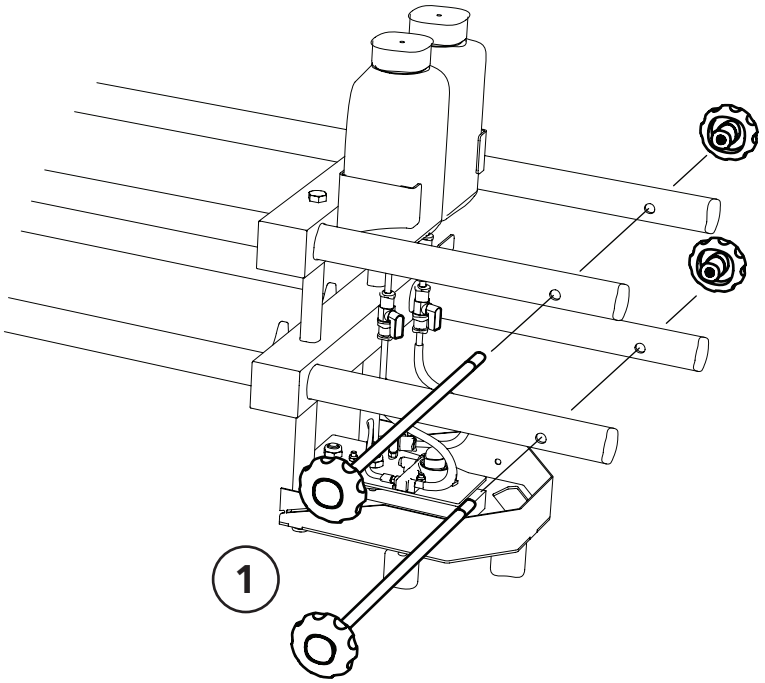

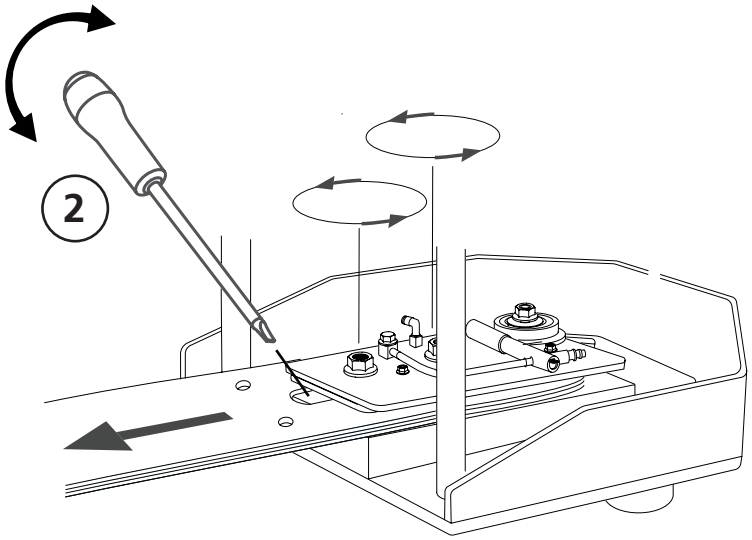

LOGOSOL

00-00082

This document and its contents are the exclusive property of Logosol AB and may not be copied, reproduced, transmitted or communicated to a third part, or used for any purpose without written permission.

Detta dokument och dess innehåll tillhör Logosol AB. Innehållet får ej kopieras, reproduceras, överföras eller skickas till tredje part, eller användas för syften som ej skriftligen godkänts.

New Issue	Old Issue	Date	User	Remarks
2	1	06-nov-2019	MM	#369
-	-	-	-	-
-	-	-	-	-

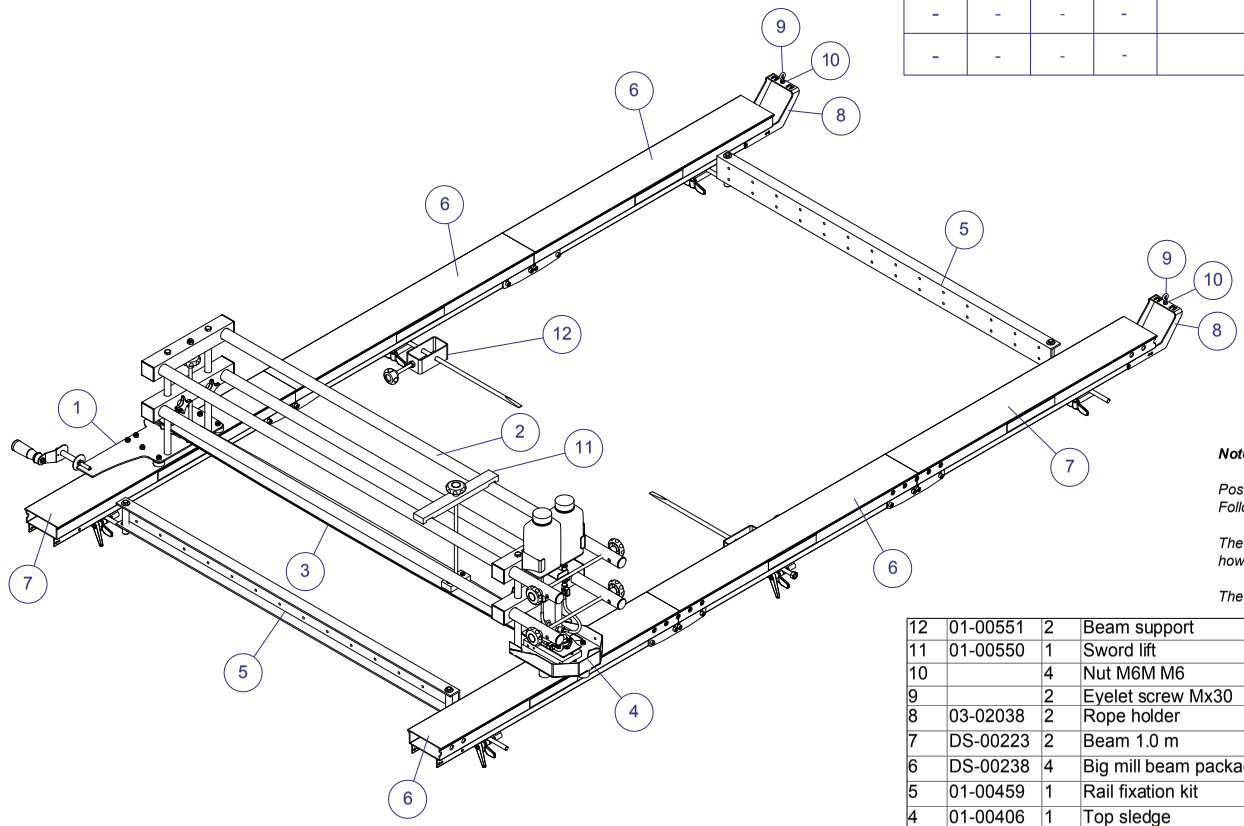

Assembled view

Note:

Pos 2. and Pos 5. depends on length of Pos 3. Following length are available: 44", 55", 64", 88"

The quantity of Pos 6. and Pos 7. depends on how much saw length is needed.

The quantity of Pos 8. depends on saw length.

Item no.	Art.no.	Qty.	Description	Issue	Garp No.
12	01-00551	2	Beam support	1	
11	01-00550	1	Sword lift	1	
10		4	Nut M6M M6		
9		2	Eyelet screw Mx30		
8	03-02038	2	Rope holder		
7	DS-00223	2	Beam 1.0 m	1	
6	DS-00238	4	Big mill beam package		
5	01-00459	1	Rail fixation kit	2	
4	01-00406	1	Top sledge	2	
3		1	Chain bar		
2	01-00489	1	Guide pipe asm.	2	
1	01-00407	1	Saw sledge	2	

A3 ISO E

Scale: 1:12,5

IronCAD 2D-drawing 3D-file available

General tolerances acc. to: ISO 2768-1 medium (-mK)

Material:

Drawn by: MM

Reviewed by:

Weight: 93,139

Last save: 2019-11-06 14:33

Sheet no. 1 (1) Issue: 2

Drawing no. : 00-00082

LOGOSOL

Fiskaregatan 2
871 33 Härnösand
Tel: 0611-182 85

Big mill

ELECTRICAL SYSTEM

The motor has thermal overheating protection. When the temperature in the motor winding becomes too high, the engine will stop and cannot be started again until it has cooled down.

The chain should rotate counter-clockwise seen from the cutting side of the guide bar. If, on delivery or after a cable change, the motor rotates in the wrong direction, the direction of rotation can be reversed by turning the phase inverter in the saw's electrical contact (the two pins on a white plastic disc). Use a big flat screwdriver.

To avoid voltage drop, it is important to always use as short a power supply cable as possible. The cable area must be at least 2.5 mm^2, and 4 mm^2 for cable lengths over 50 m. If the voltage is too low, the power of the motor will be reduced, and the electrical equipment may be damaged.

To start the saw unit, hold down the hold-to-run button (2) and press the green button (1) at the same time. To stop the saw unit, you can either release the hold-to-run button or press the emergency stop button (1).

1 Green= On, Red = Emergency Stop
2 Hold-to-run button
3 Electrical contact with phase inverter

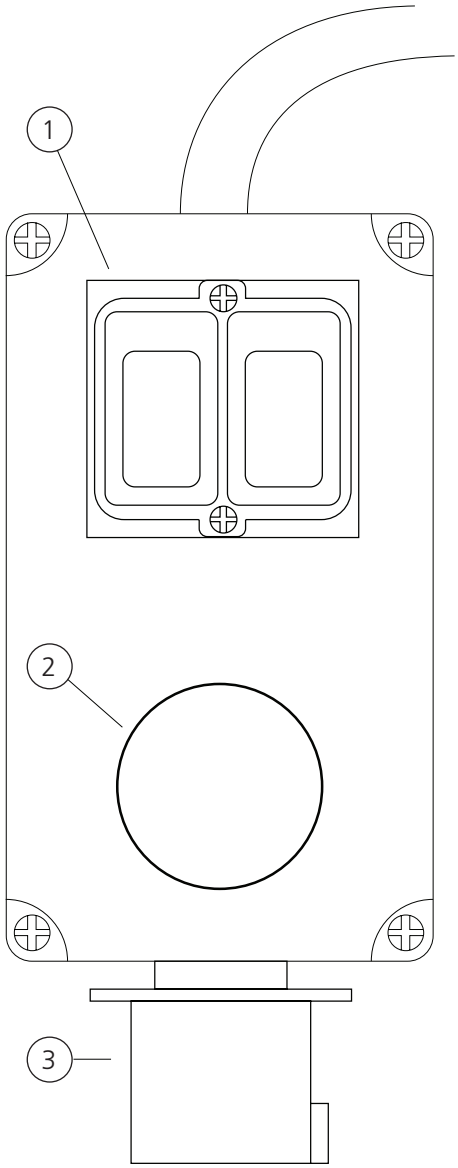

TROUBLESHOOTING

PROBLEM/SYMPTOM	PROBABLE CAUSE	REMEDY
The saw cuts slowly	• Dull saw chain • The slide strips/guides are set incorrectly • Resin and dirt on the guide rail	• Resharpen or replace the saw chain. • Adjust the slide strips/guides as described in the instructions. • Clean the guide rail and use silicone spray (art.nr. 9999-000-5110) to reduce friction between the saw and the rail.
The guide bar wears out quickly	• Feed pressure too high • Substandard saw chain oil • Insufficient oil lubrication	• Reduce the feed pressure (especially when making narrow cuts). • Change to a high-quality saw chain oil. • Increase the flow of the oil pump and/or clean oil bottle and hoses.
Insufficient oil lubrication	• Dirt in oil bottle/hose/guide bar • Old oil has hardened • Worn oil pump • Worn plastic gear in oil pump • Worn bearing in oil pump	• Clean the entire oil system. • Clean the entire oil system. • Renew the oil pump. • Renew plastic gear in the oil pump. • Renew the bearing in the oil pump.
Chain breakage	• Insufficient lubrication • The chain is too tight • Worn chain sprocket • Loose engine bolts • The chain is too slack	• Increase the flow of the oil pump and/or clean oil bottle and hoses. • Adjust the chain tension as described in the instructions. • Check the chain sprocket and change if necessary. • Make sure that all four bolts holding the engine to the saw chassis are firmly tightened. • Tighten the chain as described in the instructions.
The guide bar cuts upwards or downwards	• The bar rails are not at a level • Loose guide bar • Worn slide strips/guides	• Grind the bar rails so that they are completely level. • Check that the guide bar is securely attached (25Nm). • Check the slide strips/guides and change if necessary.
Angular error on the sawing result	• Loose guide bar • Worn or misaligned slide strips/guides	• Check that the guide bar is securely attached (25Nm) • Check wear and adjustment of the saw's plastic slide strips/guides. Adjust and/or renew if necessary.
Washboard patterns on the sawn boards	• Incorrectly sharpened saw chain • Worn guide bar	• Resharpen the saw chain. • Renew the guide bar.

CUTTING EQUIPMENT

LOGOSOL's ripping chain allows quick length sawing with a thin kerf. But it is less durable than normal chains. If you keep the cutting equipment in good condition, you get the right timber dimensions, faster sawing and the cutting equipment will last longer.

Sharpen the chain before it gets dull

When the chain is beginning to get dull, you will notice that the cutting speed is decresing, the guide bar becomes hot and it becomes harder to feed the saw unit forward. Stop sawing immediately! Acctually, when this happens, it is already too late to sharpen the chain. Sawing with a dull chain exposes the cutting equipment to high levels of mechanical stress. Therefore, sharpen the chain before it becomes dull!

Avoid chain breaks

If you are sawing too long with a dull chain, it can break. The chain breaks under the cutting teeth, and you will see that it is worn there.

If, however, a drive link breaks, this can be due to the chain and sprocket not being a good match. The best solution is to run 5 chains alternately on one chain drive. When the chains are worn out, then replace the entire set. A completely new chain on a worn sprocket can break in the first few minutes of use.

It is not recommended to run a normal 1.6 mm cross-cutting chain and 1.3 mm ripping chain on the same sprocket.

The guide bar can pull askew

If the chain has been damaged on one side or been filed unevenly, it can run incorrectly. The guide bar is pressed upwards or downwards and "springs back" when it comes out of the log. The chain will then wear more on one bar rail, and if you continue to saw the guide bar will wear unevenly. Even though you replace the chain, an unevenly worn bar can guide the chain incorrectly and, in addition, the new chain can also be worn down. An unevenly worn bar can be repaired. File bar rails so they are equally high e.g. with an edge file (SKU: 9999-000-0450) or LOGOSOL's electric guide bar grinder (SKU: 7804-000-0005).

Another more common reason for the guide bar pulling askew is that it is worn out so that the drive links touches the bottom in the track of the guide bar and the chain loses the support provided by the bar rails. This is shown on the chain by the tip of the drive link becoming worn.

The best chain oil

In order for the chain oil to work well it must be viscous and thready. When you place a drop between the thumb and the index finger and then open them, long threads should form. We recommend LOGOSOL's sawmill chain oil, SKU numbers as given below:

1 litre, SKU: 0718-000-1001
10 litres, SKU: 0718-000-1010

Handbook for your cutting tools

LOGOSOL has a separate document which we keep updated with respect to the technical specification of the latest new products. It is called 'The Handbook for Your Cutting Tools' and can be downloaded free of charge from our web site. You can also order a printed version.

SAWING: TIPS AND ADVICE

At the start, it can be a good idea to draw lines on the log ends showing what you are planning to cut out from the log. Use a broad tip marker pen to make the line correspond with the kerf.

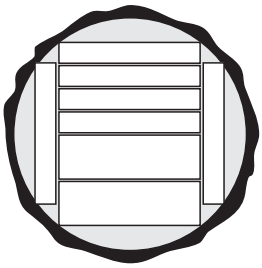

Keep in mind that:

- when an unsawn surface of the log faces down, the log bed where the top end of the log rests is to be set higher than the one where the root end rests.
- The beds are set to the same height when a sawn surface faces down.
- Compensate for the kerf (1 click equals 1/4") when the board is cut above the guide bar.
- Do not compensate for the kerf when the board is cut under the guide bar.
- The last board must not be thinner than 2".
- Make sure that you do not cut into the log clamps.

Through-and-through sawing

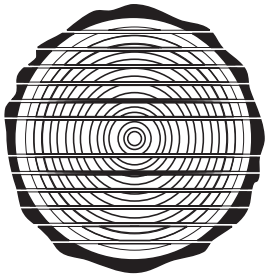

Sometimes, it can be better to slice up the log into waney-edged boards. This way you can get a little more out of every log. However, this method takes a bit more time. When cutting fine joinery timber, it can be a good idea to edge only one side before drying the timber. The last edging is not made until you know what the board is to be used for. This is to be able to make use of as much as possible of the timber.

When you are going to slice up a log, it is best if you first cut off a thin slab and then turn that side down to make the log rest on a flat surface on at least one of the log beds. This prevents the log from moving between the cuts and you will have nice and even boards.

Rotate the log when you have come close to the centre of the log. Calculate at what height you should start sawing.

Remember to compensate with 1/4" for every cut.

Quarter sawing

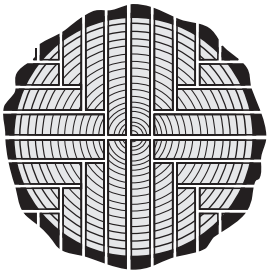

Quarter sawing provides you with the finest timber. You get optimum grain direction in every board, which is a big advantage when the wood is intended for cabinetmaking e.g. The downside is that it takes time, it is difficult, and you get several different board widths. Quarter sawing should not be applied when cutting small logs.

Start by cutting the log in half at its centre. Then you cut through the middle of the halves to get quarters.

When cutting the boards, you turn the cant after each cut. Sometimes, it can be easier to cut from below. This way the height of the log beds can be left unchanged.

Does this seem difficult?

We are many here at LOGOSOL that have long experience in sawing. If you, as a new sawmill owner, have any question, you are warmly welcome to call us. We are happy to provide you with useful tips and advice.

PRECISION

Demands for precision

We are convinced that a chain sawmill can provide as good results as, or better results than, other small-scale sawing methods. A large number of our customers have reported that they have never had better wood products than those they have sawn themselves. However, it is natural that we also meet customers who want to improve on the precision. Experience has shown us that variations in sawing results can have many explanations. The choice of raw material is vital. Cutting good boards from short, sturdy logs is considerably easier than getting high precision results from long, thin ones. Tensions caused by storage or place of growth can cause problems. Some tree types cause more problems than others, etc.

The precision requirements also vary. A result that is satisfactory for someone sawing boards for rustic fence posts may not be good enough for someone sawing boards to be used in construction without being planed first.

If you have gone through the various steps for adjusting the sawmill, checked the cutting equipment and observed the effects of tensions in the wood, but still do not get the sawing results you expect, please contact us at Logosol.

DRYING THE WOOD

Once the wood is sawn it must be dried. If this is not done in the right way, then there is a danger it will be damaged by fungal rot.

The best time for outdoor drying is in the spring. The relative humidity of the air is very low and the wood will dry in a couple of weeks.

Cut some supportive blocks in the length that corresponds to the width of your pile, ideally larger pieces, e.g. 5”5, to raise the wood from the ground, which should also be dry, level and free of growth. The spacing should not exceed 1 m and should lie level and in line with each other.

Cut spacers or drying sticks in the same length as the supportive blocks.They should be of the same thickness (1x1” or 1x2”) and dry. (You can get material for these by making an extra cut when edging your boards.)

Place the first row of boards on the underlying surface. The boards are to be of the same thickness and be positioned a few centimetres apart. Then place spacers on the boards (in the same positions as the underlying supportive blocks) before the next layer is laid. It is important to place the spacers exactly over each other, to keep the boards from warping or bending.

The higher you pile the boards, the better pressure there is on the lower boards. Place roofing of plastic, metal sheeting or masonite over the top to provide protection from rain, but leave the sides open. Put a weight of some sort on the roof to put pressure on the top boards.

If the wood is to be used for fine joinery, it should be stored in a heated room for another 3-4 weeks (longer for thicker dimensions) or be dried in a wood drying kiln for a perfect result.

It is possible to use undried wood in some constructions, but it must be kept in mind that the width and height will shrink 5%. Wood also shrinks around 0.3% in length, but this can usually be disregarded. In order to avoid rot, you should not enclose undried wood in a way that makes it hard for air to circulate. One further tip: Do not drive two nails next to each other as the board will probably crack in the middle when it dries out. Drive one nail and wait with the second until the wood has dried.

One example of where you should use undried wood is when building log structures. In such a situation, a heavy wall is a plus, as is the possibility that the logs still can be shaped when they are pressed against each other.

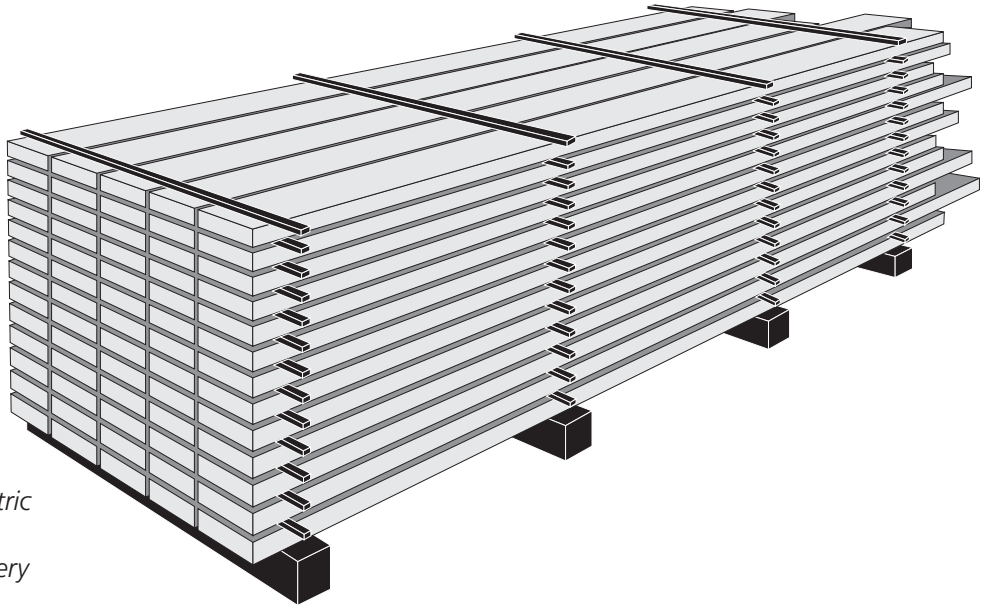

LOGOSOL also has electric wood drying kilns for preparation of fine joinery timber.

EU declaration of conformity

In accordance with Directive 2006/42/EC, Annex 2A

Logosol AB
Fiskaregatan 2
871 33 Härnösand
SWEDEN

hereby declares that **Logosol ES5/ES8 WS electric chainsaw**

is manufactured in accordance with:
Machinery Directive 2006/42/EC
EMC Directive 2004/108/EU

and has been manufactured in conformity with the following harmonized standards:
EN ISO 12100:2010
EN 60204-1:2006
EN 50370-1, -2.

Notified body, 0404,RISE SMP Swedish Machinery Testing Institute AB, Box 7035, 750 07 Uppsala, Sweden, has executed EC type-examination according to Directive 2006/42/EG, article 12, paragraph 3b. The EC type examination certificate has the number: 0404/17/2408

The delivered electric chainsaw corresponds to the machine that was subject to EC type-examination.

LOGOSOL

Fiskaregatan 2, 871 33 Härnösand, SWEDEN
+46 611 182 85 | info@logosol.com | www.logosol.com