LOGOSOL

USER MANUAL

TRANSLATION OF ORIGINAL USER MANUAL

0458-395-5471

REV: 1

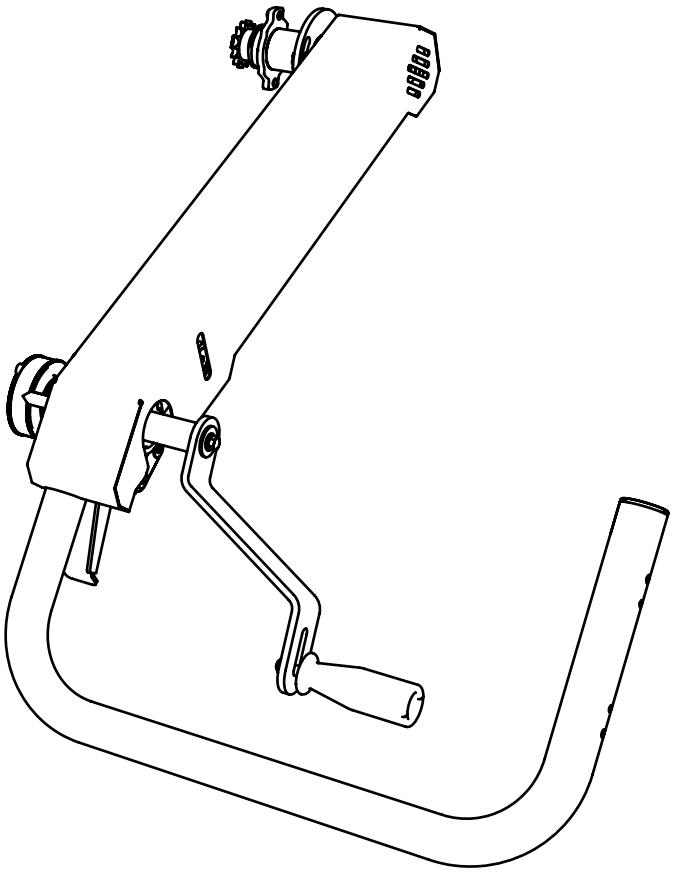

CUT SET

Read through the user manual carefully and make sure you understand its contents before you use the machine.

This user manual contains important safety instructions.

WARNING! Incorrect use can result in serious or fatal injuries to the operator or others.

EN

LOGOSOL

BOLTS & NUTS

Definition of fasteners on following pages.

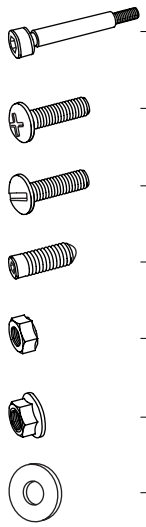

Shoulder bolt

Phillips bolt

Slotted bolt

Set screw

Hex nut

Flange nut

Flat washer

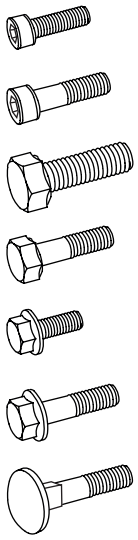

Allen bolt

Partial thread Allen bolt

Hex bolt

Partial thread hex bolt

Flange bolt

Partial thread flange bolt

Carriage bolt

ADDITIONAL SYMBOLS

The following symbols are used as supplements to the symbols above to describe the design or function of the fasteners.

Low Tensilock Lock Countersunk Dome

DIAMETER & LENGTH

The size of a fastener is written as a diameter measurement **(M)** ISO 68-1. For bolts, this is followed by a length measurement. The length of the bolt is measured from below the head to the tip of the bolt.

(Diameter)		**(Length)**
M8	x	20

When this symbol appears during assembly, parts must be lubricated before installation. Lubricate affected parts with universal grease.

This symbol describes the recommended lifting point for heavy lifts.

This symbol describes the sawing direction and reappears during assembly.

Screw the joint finger-tight.

1

2 x – M8x16

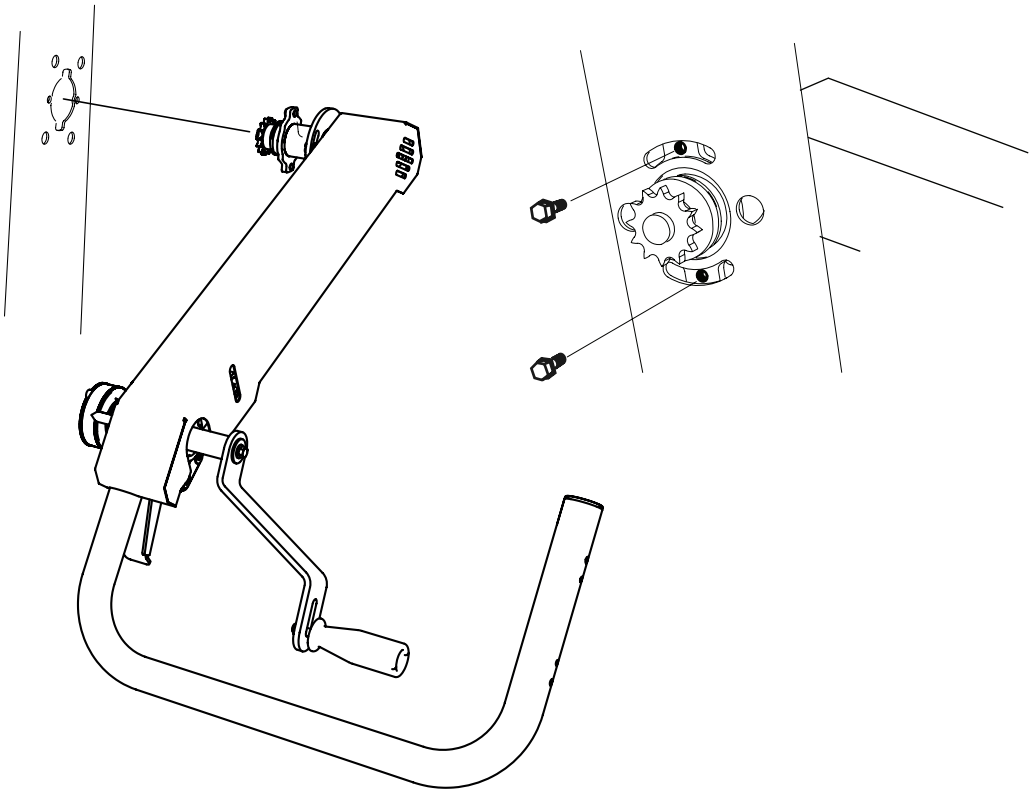

2

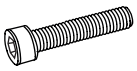

2 x – M8x60

2 x – M8

2 x – M8

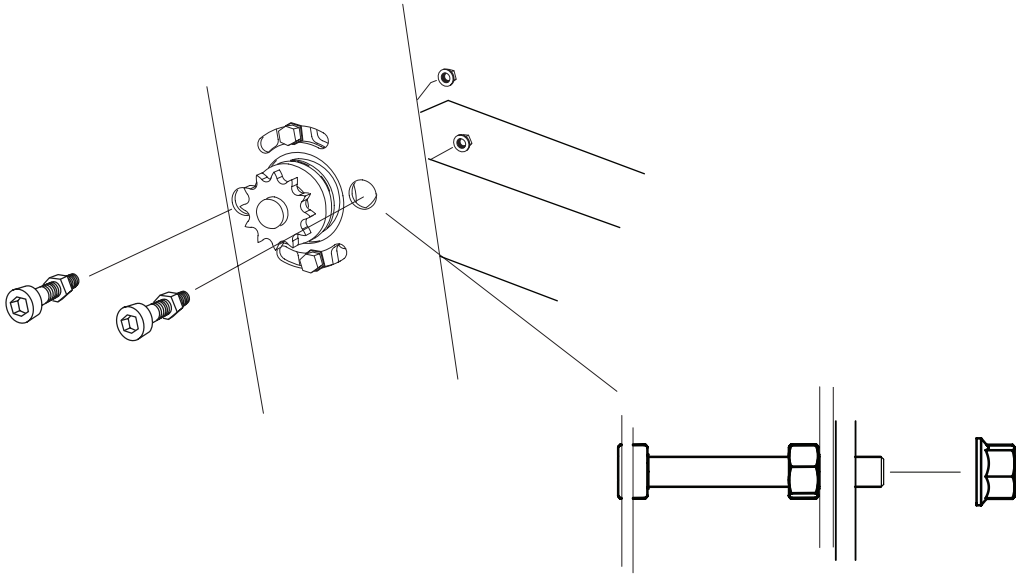

3

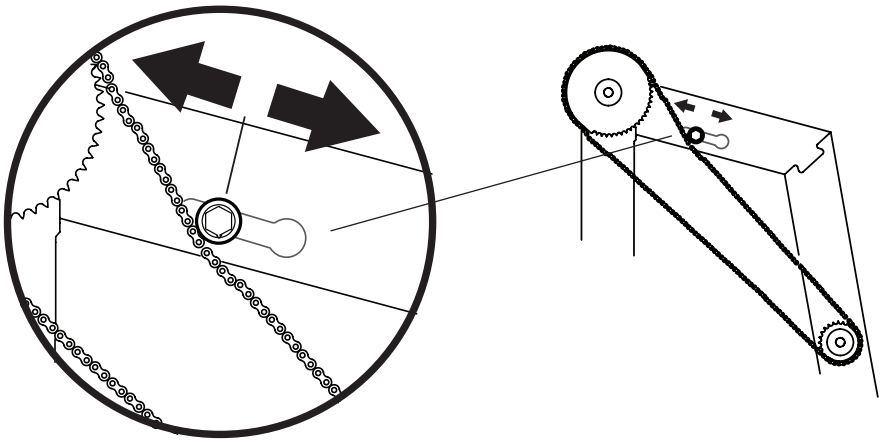

LOGOSOL

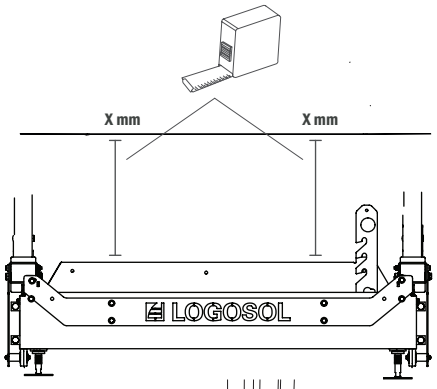

ADJUST THE PARALLELITY BETWEEN THE BAND BLADE AND THE CROSS BUNKS

To ensure a good sawing result, it is important that the band blade is parallel with the cross bunks. Measure the vertical distance between the blade and the cross bunk. Note down the measurements.

When carrying out this adjustment, the blade guide rollers have to be removed.

Adjust the band blade by turning the adjusting bolts on the sawhead until the measurements are the same at both measuring points.

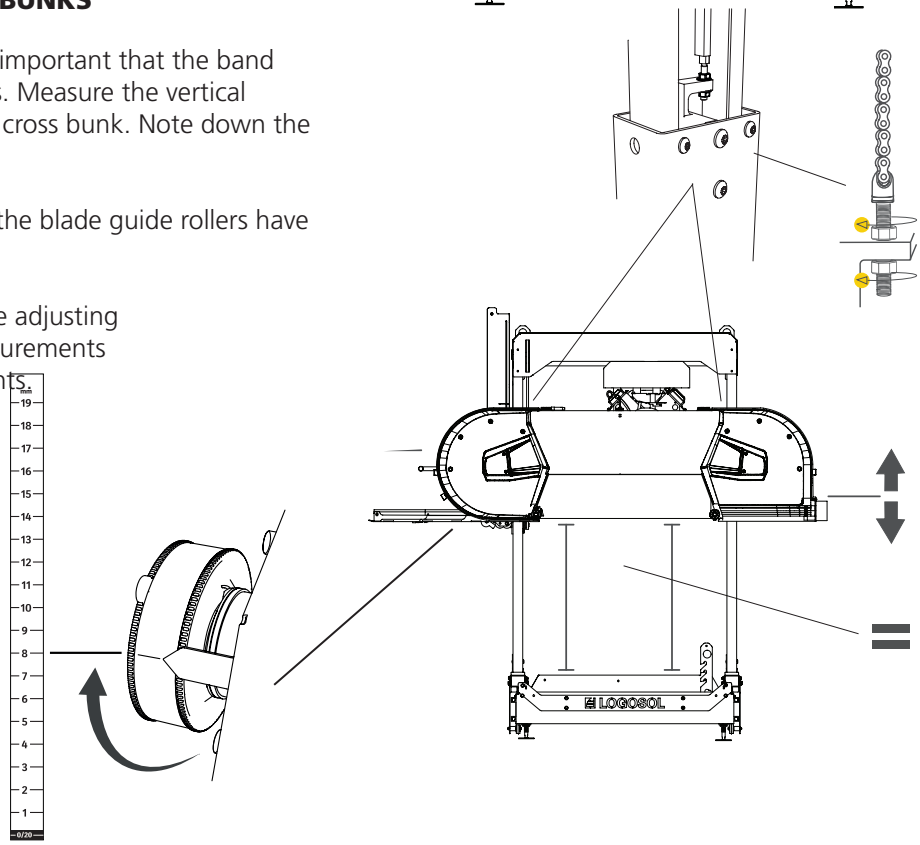

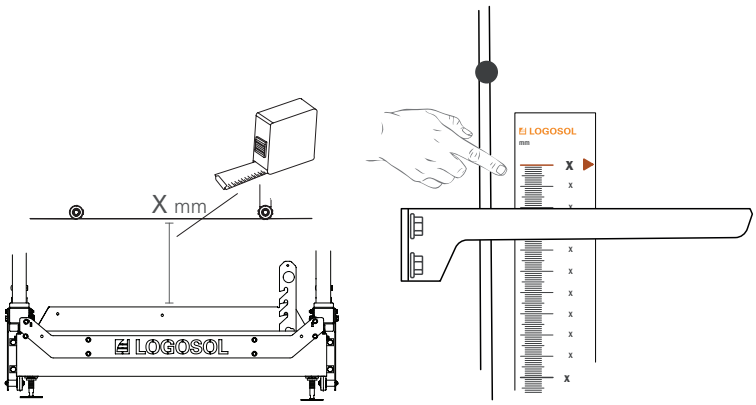

ADJUSTING THE SCALE

To ensure that the scale shows the correct measurement between the cross bunk and the blade, it has to be calibrated. Do as follows: Measure the vertical distance between the sawhead and a cross bunk. Note down the distance. Fit the magnetic scale to the scale plate so that the measurement indicated at the top side of the pointer is the same as the measurement you noted down.

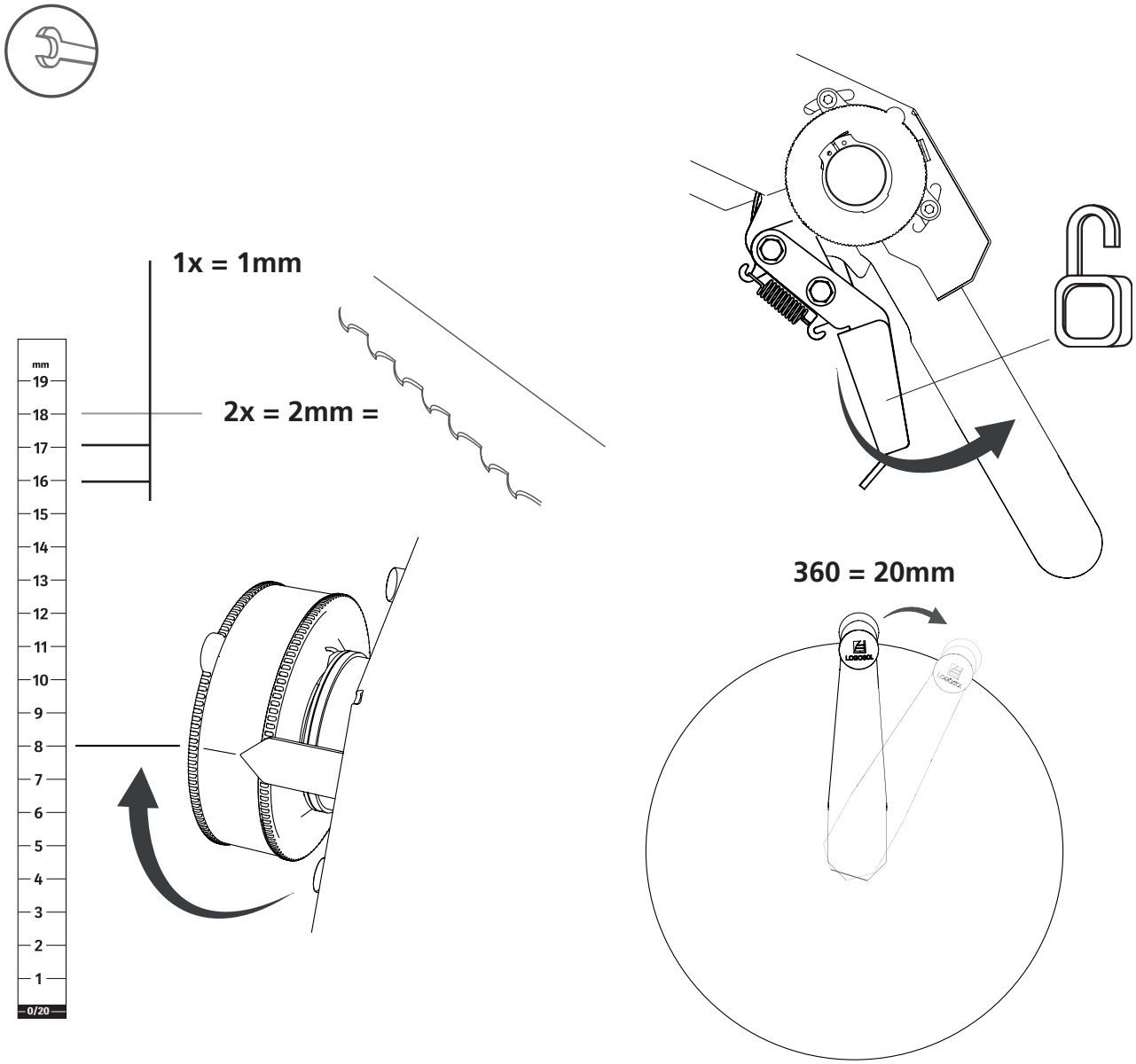

TIP: When a board is cut above the blade, you have to compensate for the kerf, i.e. 2mm'. The wood piece below the blade never needs to be kerf compensated. It has the same measurement as the one shown on the absolute scale on the front leg of the carraige.

This is how you use the crank scale when adjusting depth of cut
Example 1: If you are going to cut a 20mm" board and the crank scale shows the number "3", you first turn the crank one full revolution and stop at "3", then you turn the crank 2 step (2mm") to number"5".

Example 2: To cut a 40mm" board starting from "3" on the scale, turn the crank two revolutions and stop at "1".

LOGOSOL

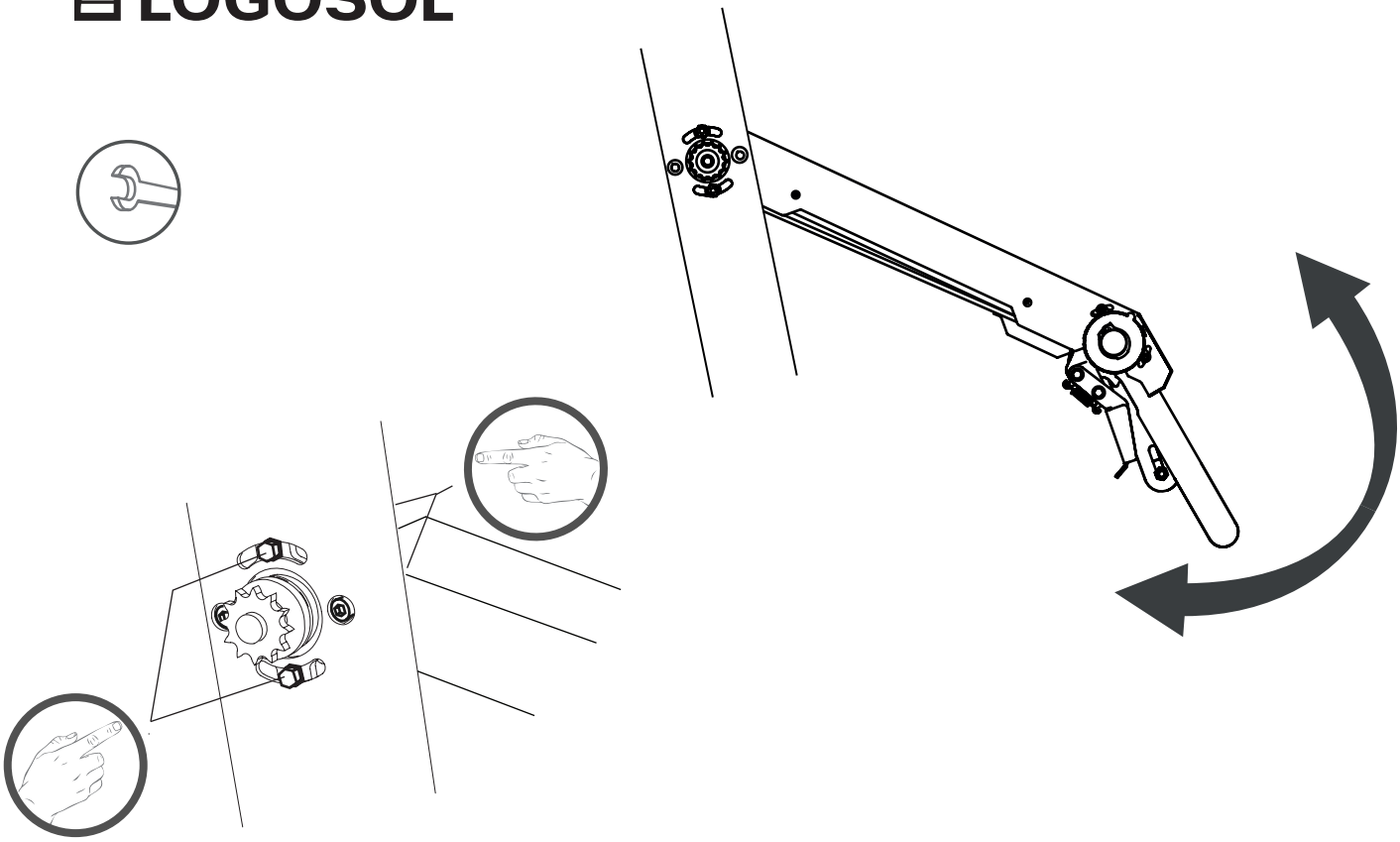

LOGOSOL

Arkivvägen 6, SE-871 53 Härnösand, Sweden
+46 611-182 85 | info@logosol.com | www.logosol.com