LOGOSOL

USER MANUAL

ORIGINAL USER MANUAL.

SKU: 0458-395-0861

REV: 2

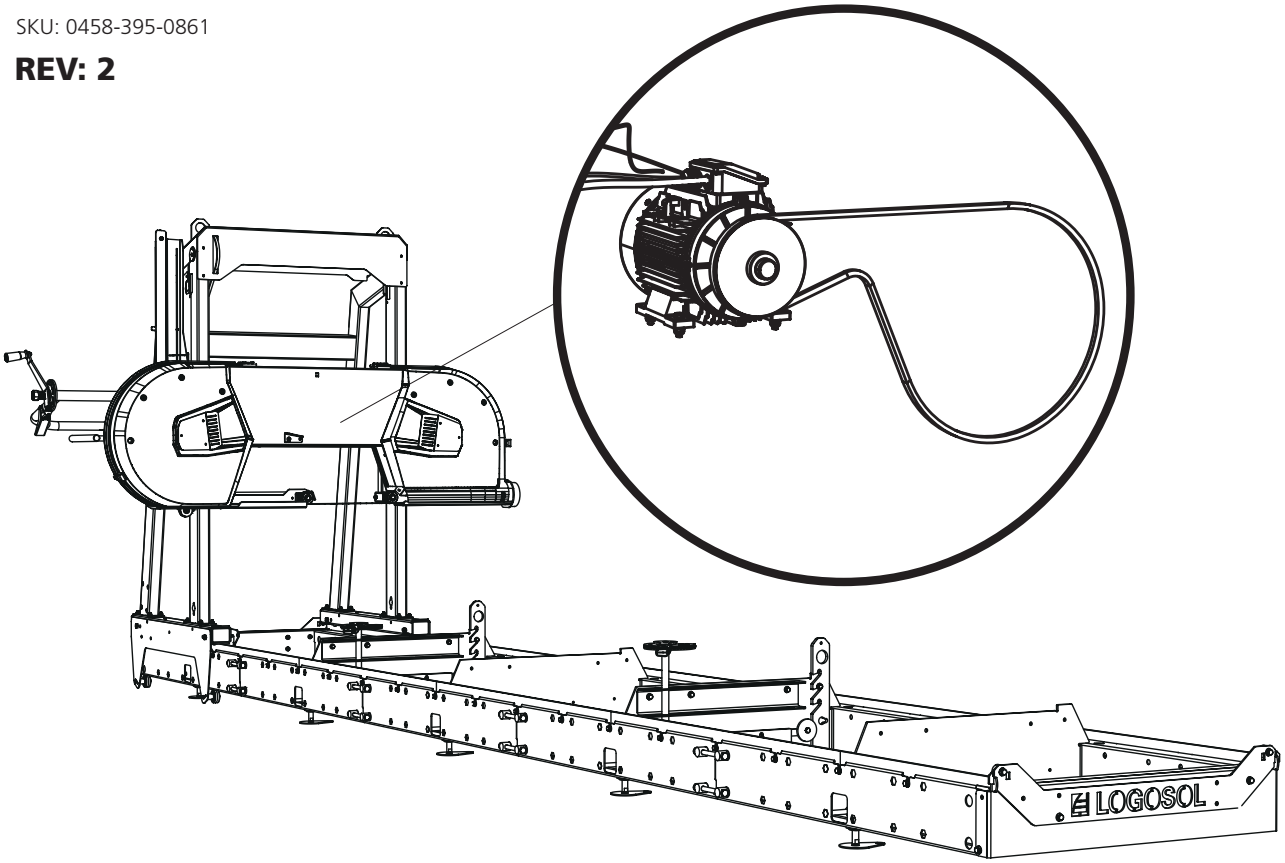

4.6 / 8 / 12 KW

This manual describes installation of the electric motor
for the Logosol band sawmill.
Please see the user manual for your band sawmill
for information on assembly, settings and safety instructions.

EN

LOGOSOL

4,6 / 8 / 12KW

Read through all the set-up instructions before starting to set up, then follow the instructions step by step as you work.

After assembly, follow the instructions under *Setup sequence* in the sawmill manual to complete setup before starting the machine.

1

The electric motor comes with the hinge switch connected. Assembly consists of installing the motor on the motor shelf, as well as mounting the pulley and drive belt. The illustration shows the hole pattern for installing the 4.6 / 8 kW electric motor. Follow the assembly instructions, then run through the setup sequence for the machine when assembly is complete.

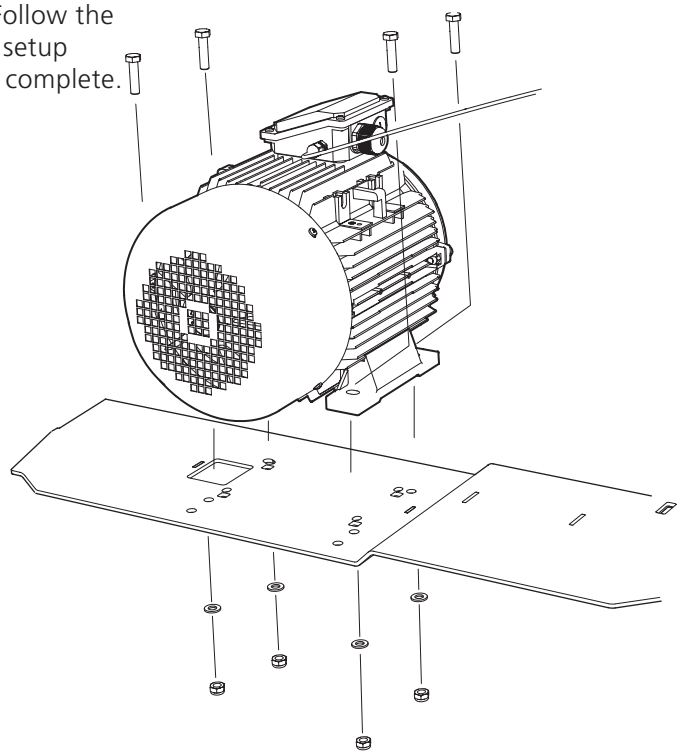

4 x – M10x40

4 x – M10

8 x – M10

Top view:

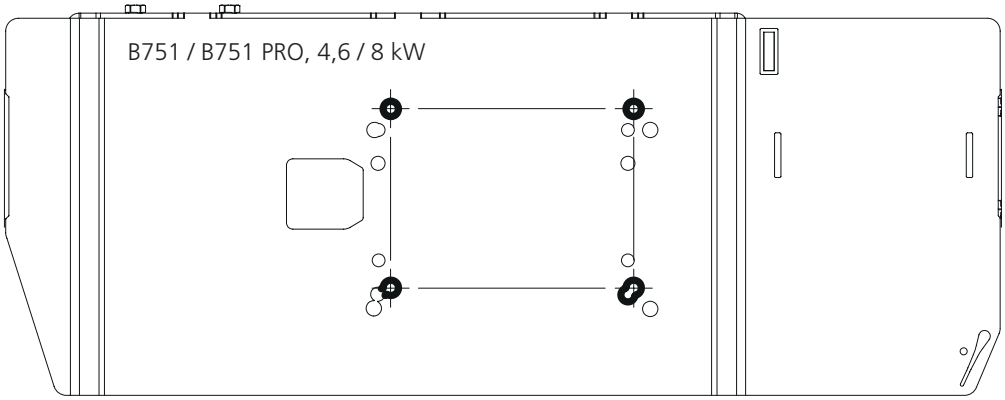

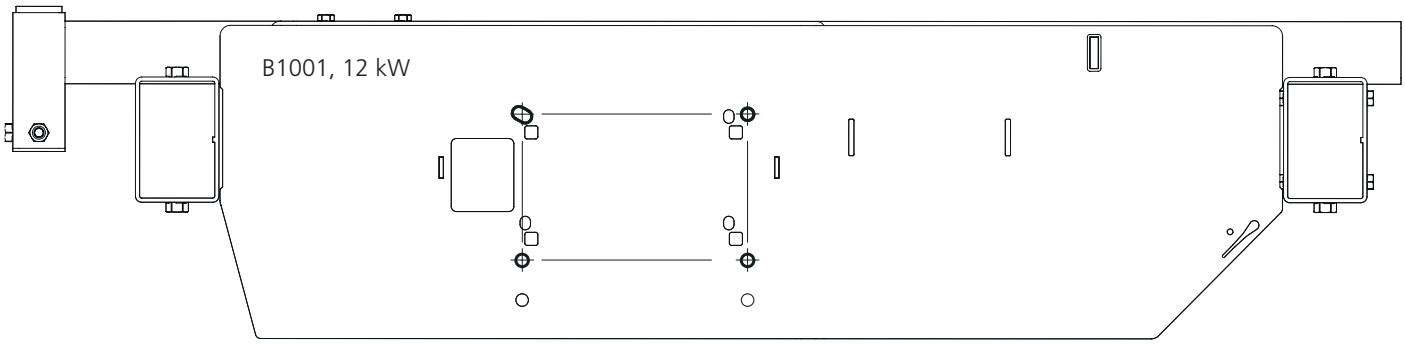

LOGOSOL

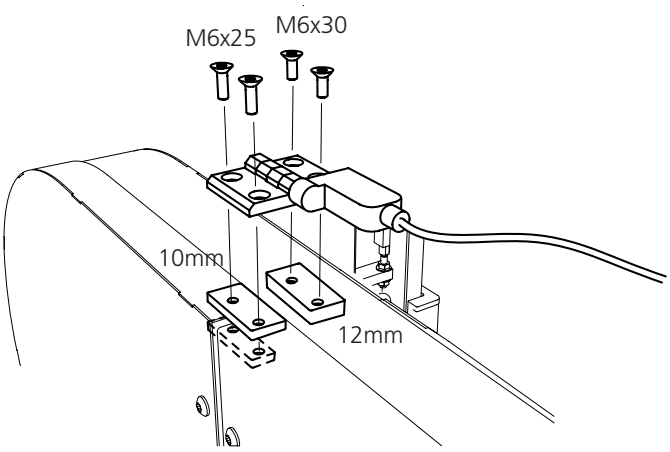

2

2 x – M6x25

2 x – M6x30

10mm
1 x – 03-01997

12mm
1 x – 03-02080

2 x – 03-02182

3

1 x

1 x

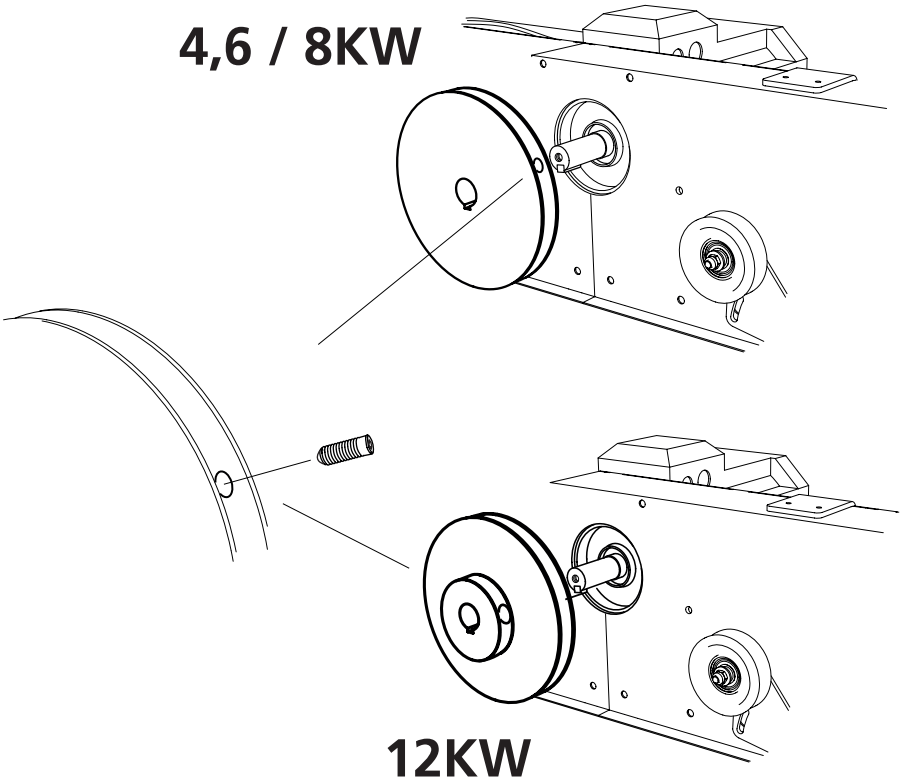

4

1 x – 9020-011-0091

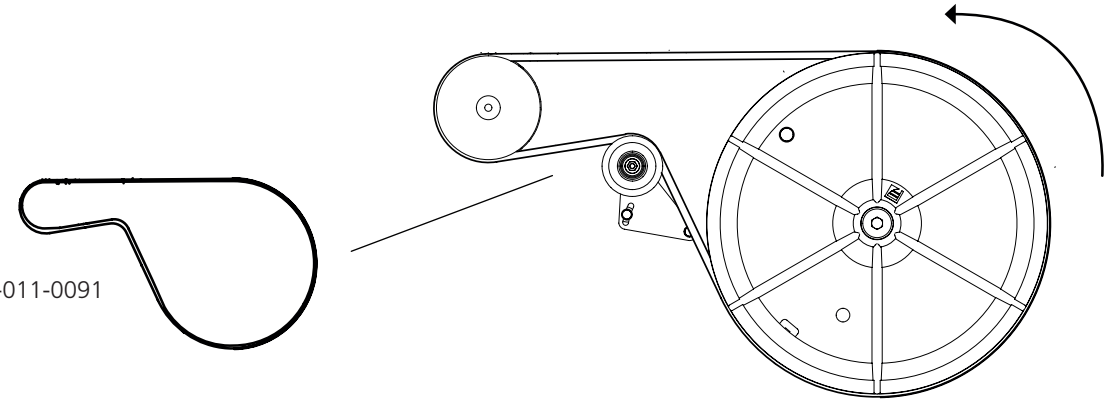

5

4 x – M6x12

4 x – M8

2 x – M8x60

2 x – M8

2 x – M8

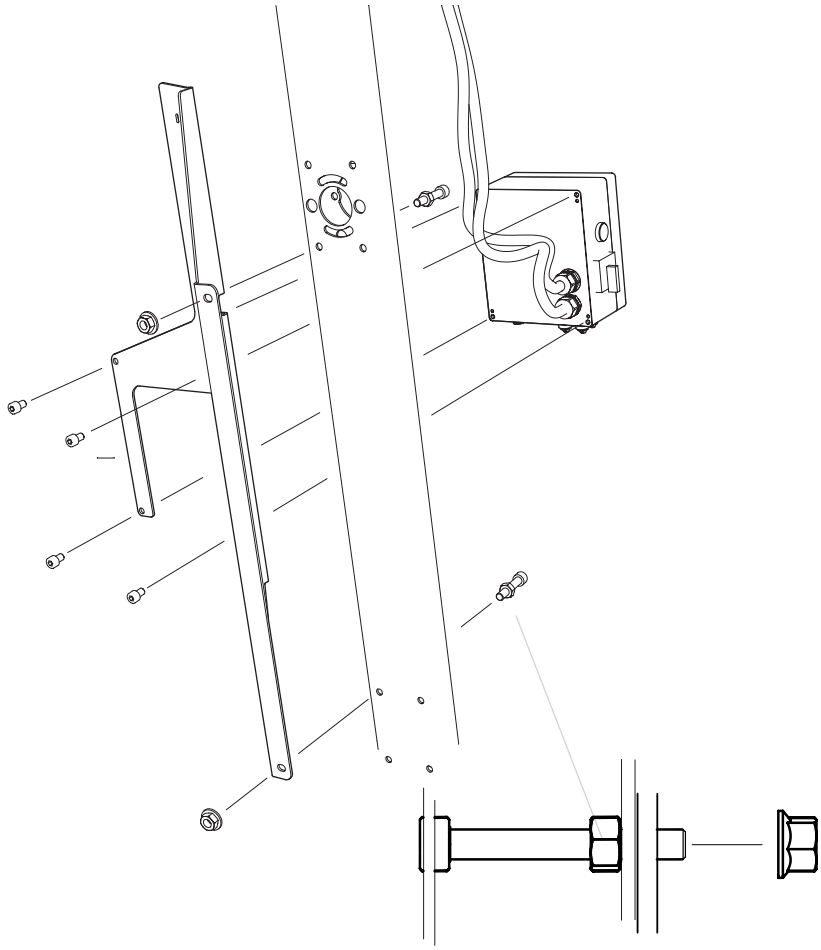

6

2 x – M6x10

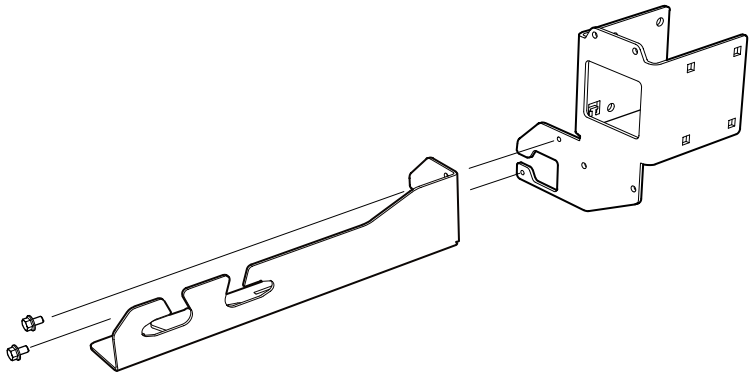

LOGOSOL

7

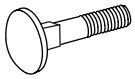

4 x – M8x120

4 x – M8

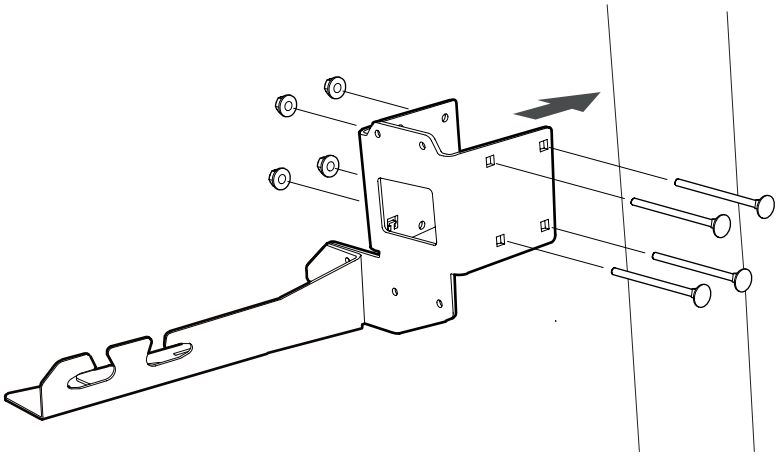

8

A 4 x – M6x16

B 2 x – M5x16

4 x – M6

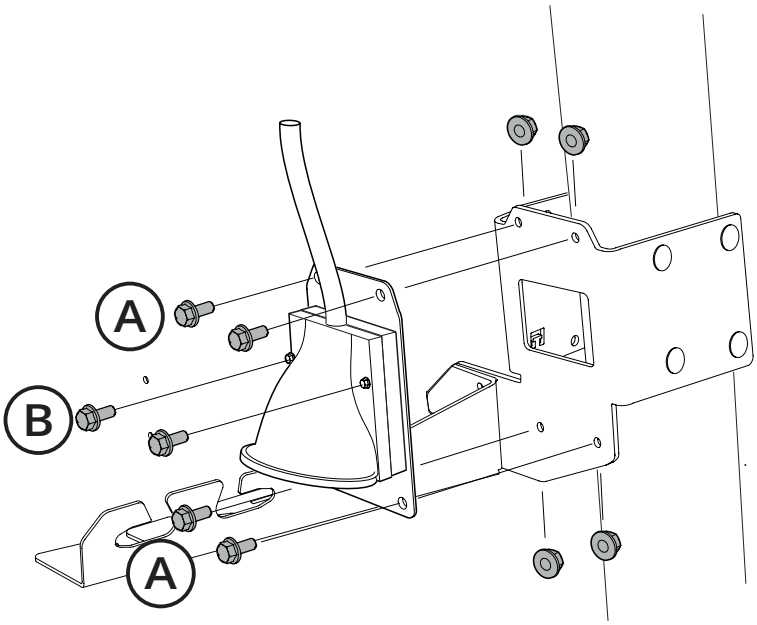

9

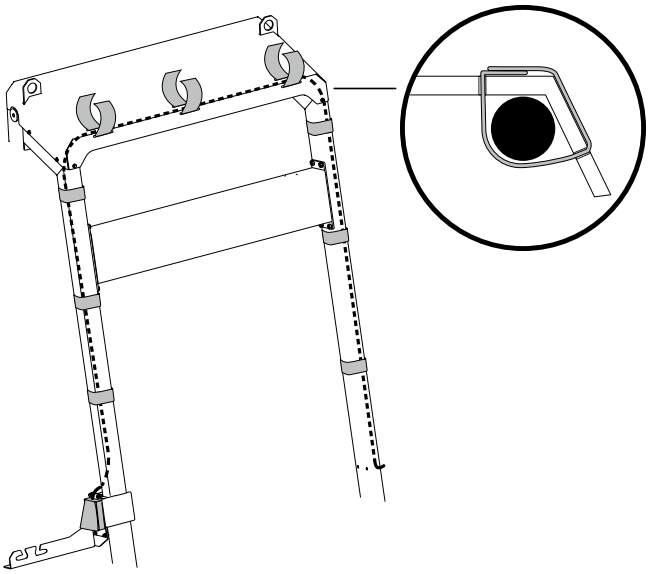

10

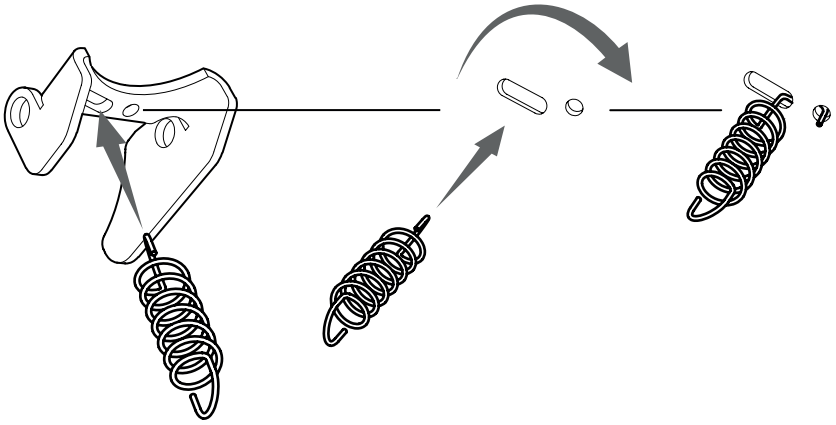

11

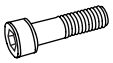

1 x – M5x50

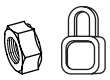

1 x – M5

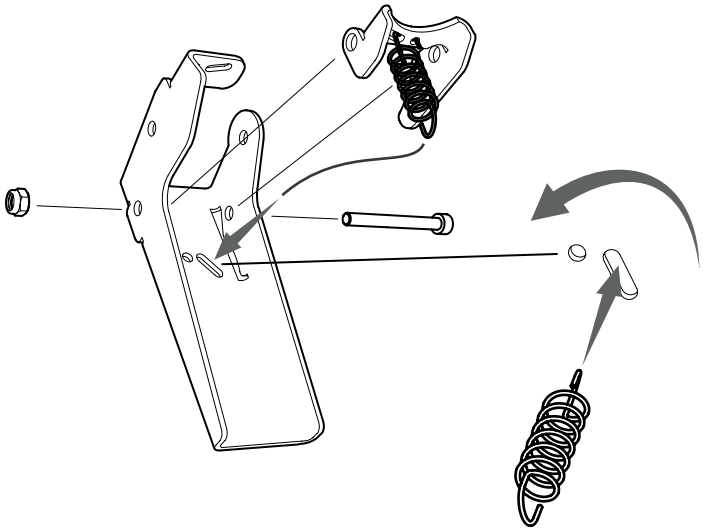

12

2 x – M5x16

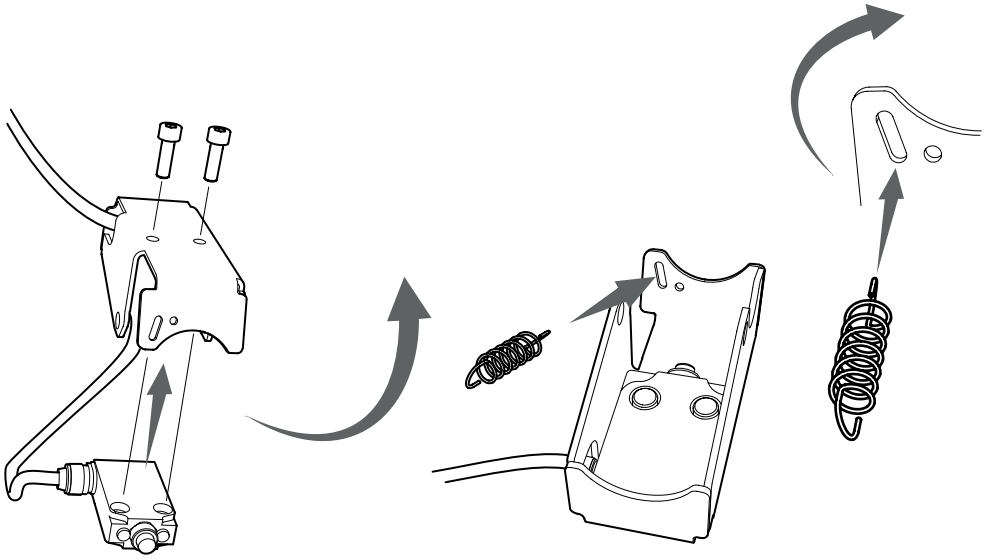

LOGOSOL

13

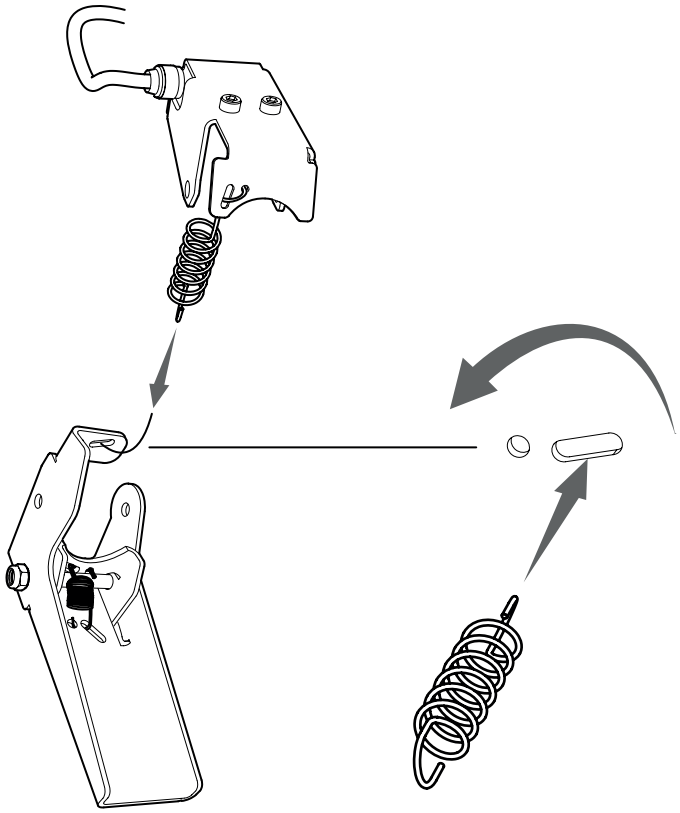

14

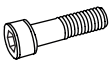

1 x – M6x50

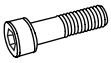

1 x – M5x50

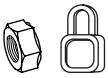

1 x – M6

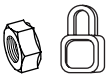

1 x – M5

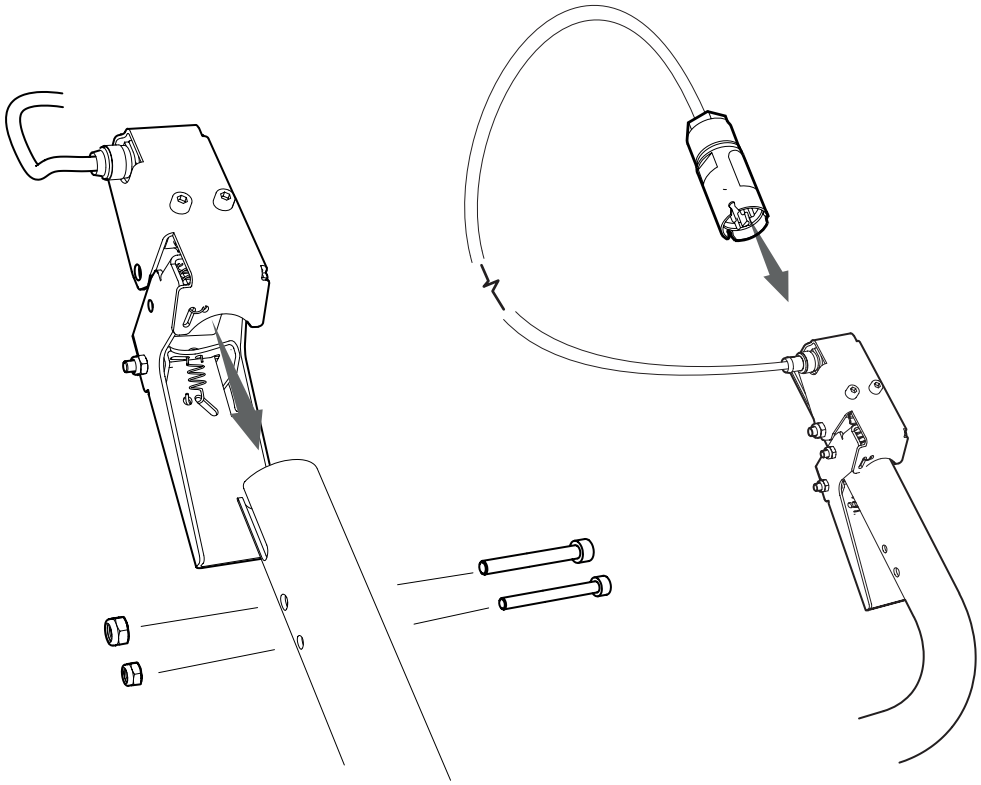

15

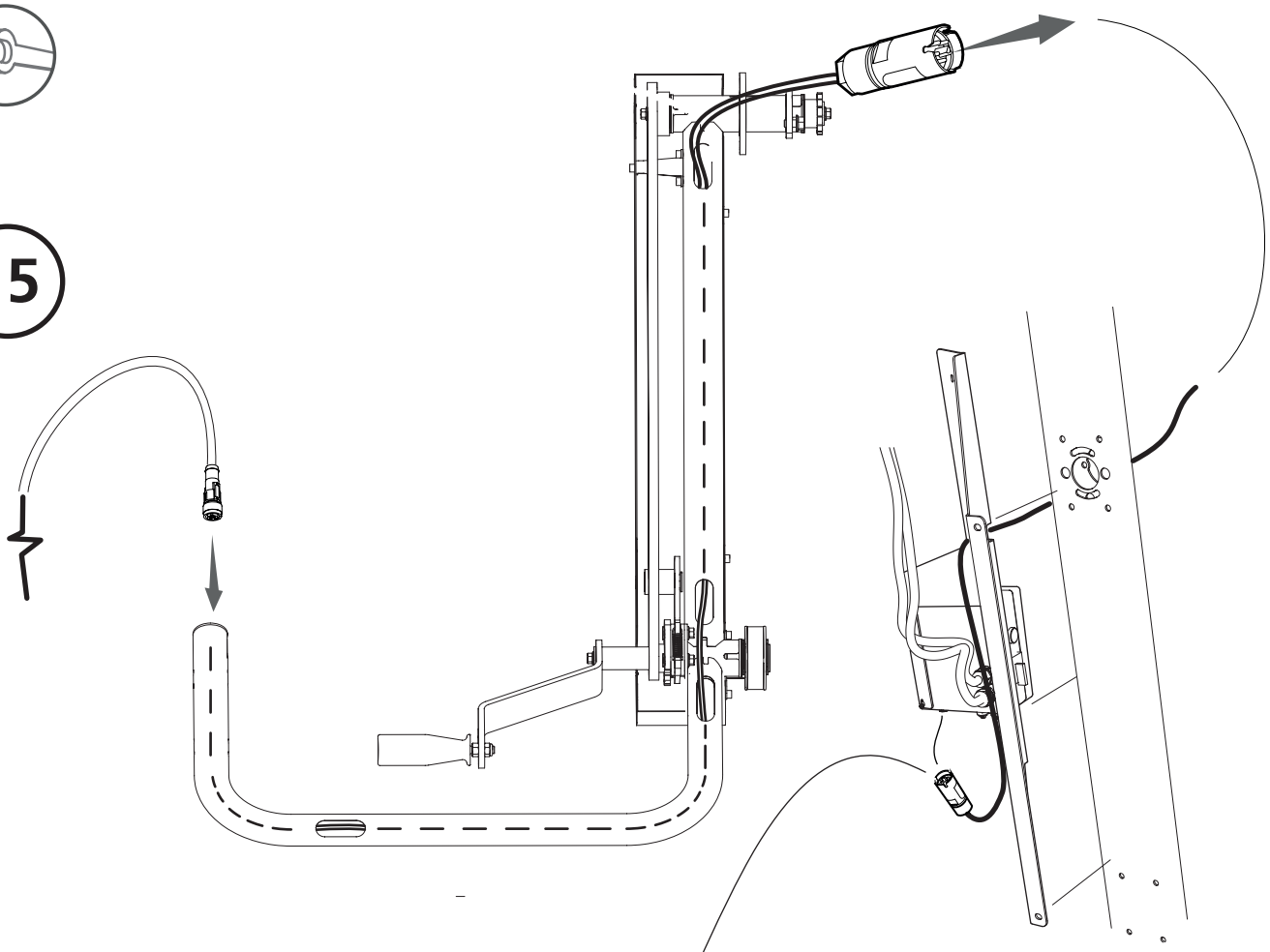

16

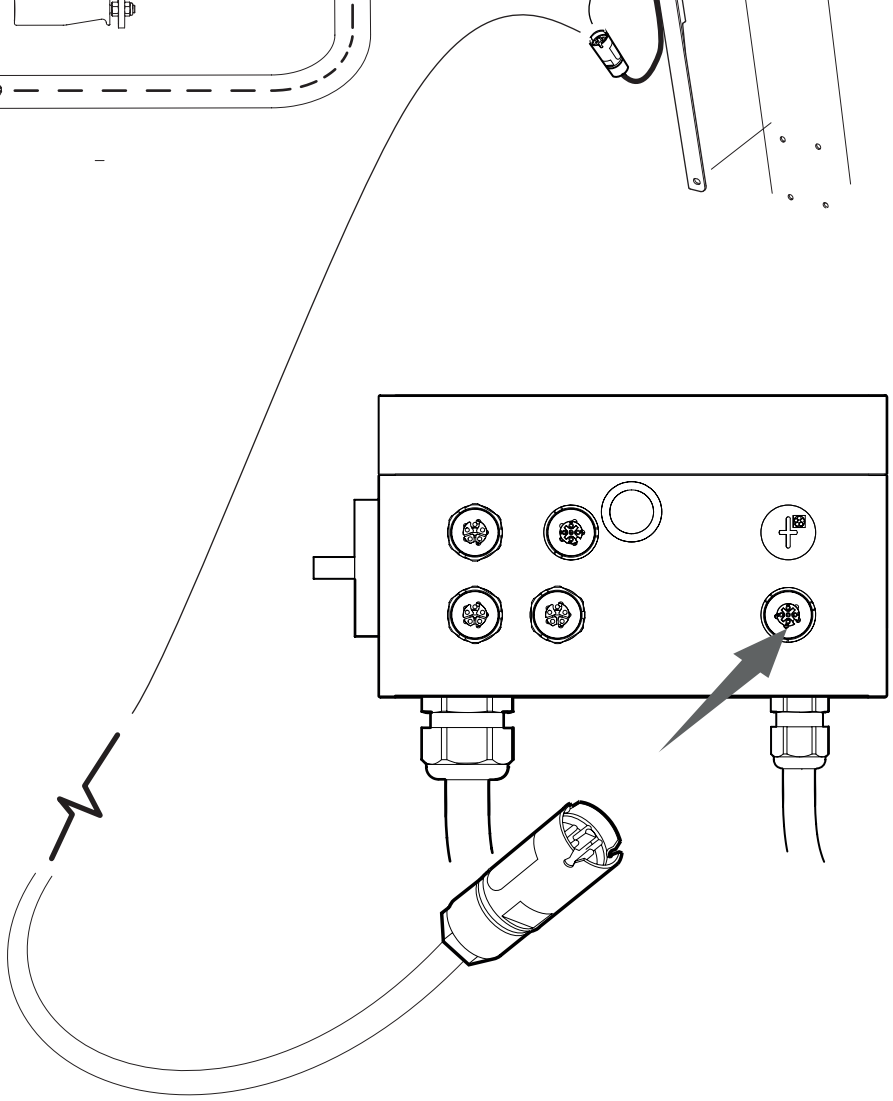

TURN ON/OFF THE SWITCH BOX

Turn the dead man's switch to (1) to turn on the power supply to the machine.

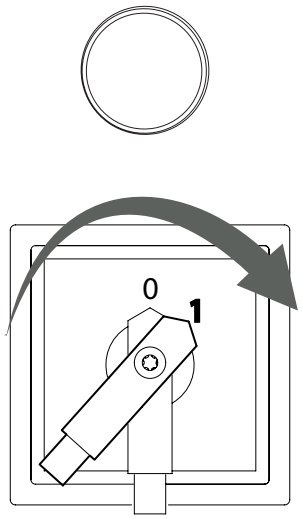

START THE MOTOR

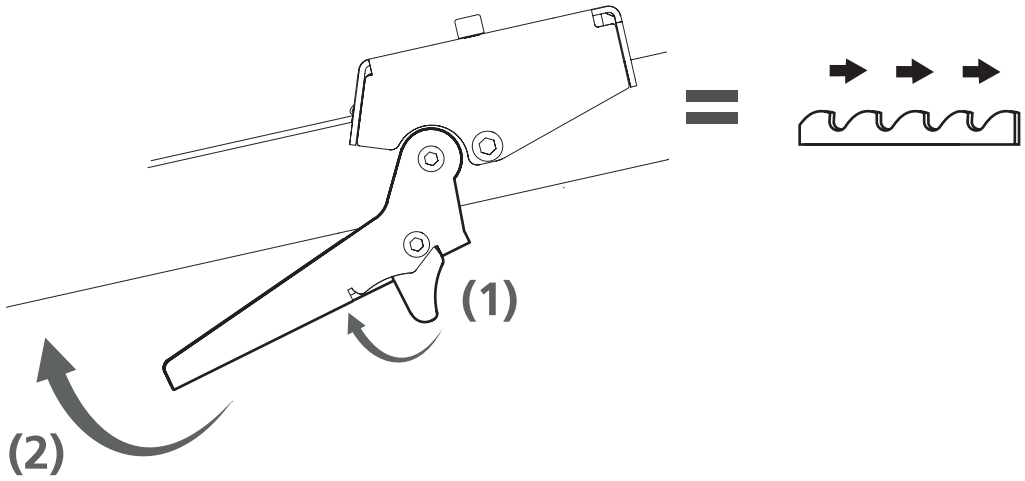

Well done!

Now you have finished installing the motor, go back to the manual for your band sawmill and carry on with the setup sequence, starting at the point as indicated in the instructions below.

SETUP SEQUENCE

Read through all the set-up instructions before starting to set up, then follow the instructions step by step as you work.

IMPORTANT!

It is important to adjust the saw head before starting to ensure satisfactory sawing and the correct functioning of the sawmill. Follow the setup sequence carefully! Certain adjustments affect other machine settings.

LOGOSOL

Arkivvägen 6, SE-871 53 Härnösand, Sweden
+46 611-182 85 | info@logosol.com | www.logosol.com