LOGOSOL

USER MANUAL

0458-395-1221

REV: 6

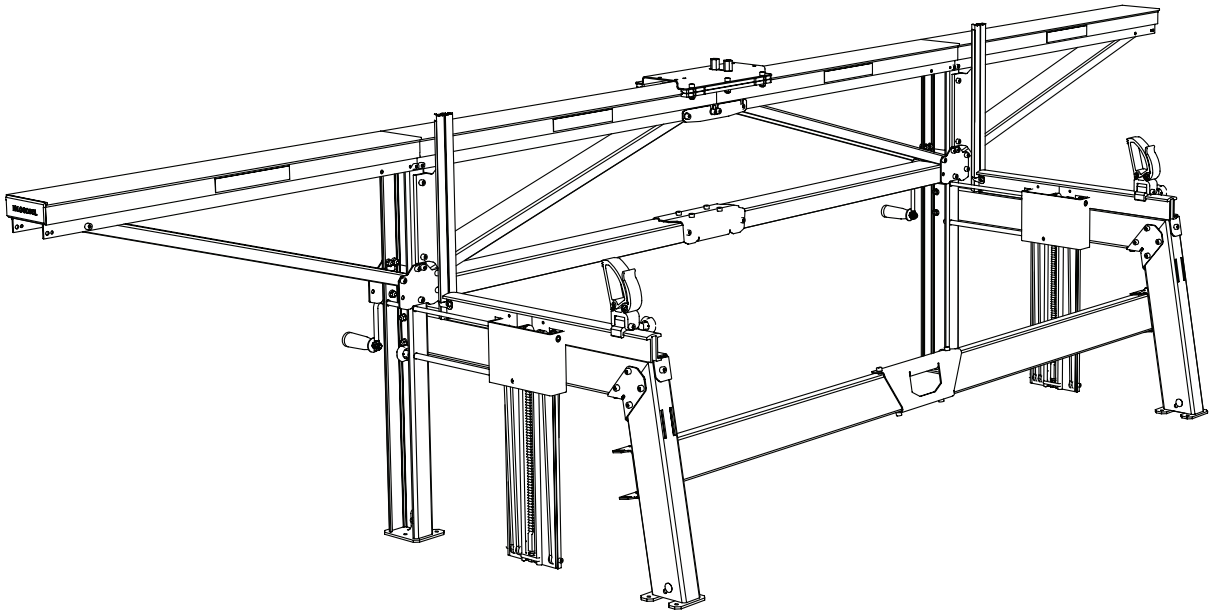

LOGOSOL F2+

CHAIN SAWMILL

EN

THANK YOU FOR CHOOSING A LOGOSOL MACHINE!

We are very pleased that you have demonstrated your confidence in us by purchasing this sawmill, and we will do our utmost to meet your expectations.

Logosol has been manufacturing sawmills since 1989. In that time we have supplied approximately 50,000 machines to satisfied customers the world over.

We care about your safety as well as we want you to achieve the best possible results with your sawmill. We therefore recommend that you take the time to carefully read this user manual from cover to cover in peace and quiet before you begin using the saw. Remember that the machine itself is just part of the value of the product. Much of the value is also to be found in the expertise we pass on to you in the user manuals. It would be a pity if that were not utilised.

We hope you get a lot of satisfaction from the use of your new machine.

Bengt-Olov Byström
Founder,
Logosol in Härnösand, Sweden

Read through the user manual carefully and make sure you understand its contents before you use the machine.

This user manual contains important safety instructions.

WARNING! Incorrect use can result in serious or fatal injuries to the operator or others.

LOGOSOL continuously develops its products.
For this reason, we must reserve the right to modify
the configuration and design of our products.
Document: Logosol F2+, User Manual
Manual, ref. no: 0458-395-1221
Text: Mattias Byström, Robert Berglund, Erik Svensson
Illustrations: Martin Söderberg, Anna Fossane
Last revised: December 2022
© 2022 LOGOSOL, Härnösand Sweden

#6

TABLE OF CONTENTS

Safety instructions	4
Technical data	6
Description of machine	6
Components: boxes in shipment	7
Components: log lifter	8
Components: guide rail	10
Components: saw carriage	11
Components: bags of smaller componets	12
Components: bolt bags	13
Tools required	14
Assembly: log lifters	**15**
Assembly: guide rail	**31**
Assembly: saw carriage	**35**
Assembly: chainsaw	**37**
Siting	38
Adjustment: log lifters	39
Adjustment: guide rail	40
Adjustment: guide bar	40
Adjustment: saw carriage	41
Sawing: step by step	42
Sawing: tips and advice	43
Precision	44
Cutting equipment	45
Troubleshooting	46
Material drying	48
Accessories	49
CE & UCKA, declaration of conformity	52

SAFETY INSTRUCTIONS

- Read carefully through the entire user manual before starting to operate the Logosol F2+. Failure to observe these safety instructions may result in fatal injuries.
- Make sure that everyone who uses the sawmill is well informed of the dangers and has read the user manual. The user manual shall always be available to the persons working with the sawmill. This also applies where the sawmill is sold or loaned out.
- Read the manual and safety instructions for the saw unit used on the sawmill.
- Minors under 18 years of age are not allowed to operate the sawmill.
- Make sure that children and animals are not in the vicinity when the sawmill is being operated.
- Respect the safety distances to avoid injury from high noise levels and from chain thrown-off in the direction of the guide bar if the chain breaks.
- Anyone working with the sawmill must be fit for work, healthy and in good physical condition. Make sure you take regular breaks when operating the machine. Never operate the machine while under the influence of alcohol, narcotics or other drugs or medicines that can cause drowsiness or inattention.
- The Logosol F2+ is only to be operated where visibility is good. It is not to be operated in the dark or where visibility is poor.
- Make sure there are other persons within earshot who you can summon if you need help.
- Only add extra equipment to the sawmill that is made by Logosol or that is specifically approved by Logosol for the purpose. Other equipment can cause accidents and should not be used. Logosol will not accept liability for personal injury or material damage that occurs while using non-approved attachments on the sawmill.
- If the saw unit used weighs more than 15 kg, support legs must be fitted under the guide rail ends. Risk of overturning.
- Always wear protective clothing and use personal protective equipment: Never operate the sawmill wearing loose-fitting clothes, overall coats or similar.
- Use safety shoes with high-grip soles and steel toecaps. Neckerchiefs, ties, jewellery or other items that can get caught in the equipment are not to be worn.
- Never stretch over or under the guide rail when the sawmill is in operation. Rotating cutting equipment. Risk of cut injuries!
- Wear strong protective gloves. Risk of cut injuries when handling the guide bar and the saw chain. Cutting equipment can also be hot immediately after sawing.

Key to symbols

For your own safety, read through the entire user manual carefully and do not start the machine before you have understood everything.

Use approved ear protectors and protective eyewear. Hearing can be damaged even after short periods of exposure.

Always use protective gloves (class 1) when working with the sawmill or handling chains. Risk of sustaining cuts when handling chains. Chains and engine parts can be hot after sawing.

Sharp rotating tools. Make sure that your fingers never come near the cutting tools.

This symbol means 'WARNING'. Pay particular attention where this symbol appears in the manual text.

This symbol is followed by instructions that must be observed. Pay particular attention where this symbol appears in the manual text.

When this symbol appears, only tighten the bolts such that they can still move. When there is no symbol, tighten the bolts firmly.

Safety distances

Respect the safety distances. The safety distance is 8 m for the operator and 15 m for persons other than the operator. The illustration below shows the sawmill from above. The operator is to remain within the area marked with a dashed line (- - - -) when the saw is in operation. The operator is not to stretch over the guide rail when the sawmill is in operation.

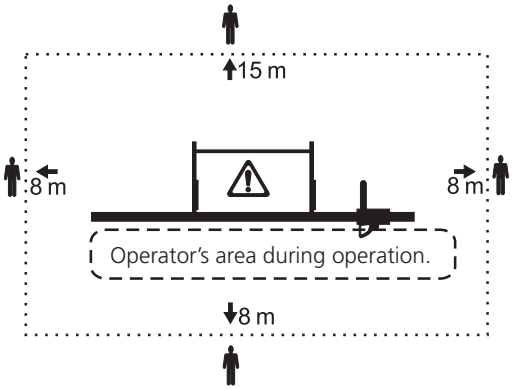

When using a petrol-driven chainsaw

Fire risk. Turn off the engine before refuelling. Petrol is extremely flammable. Burn injuries can be life threatening. If you spill fuel, immediately clean the components the fuel has come in contact with. Clothes on which fuel has been spilt are to be changed immediately.

- Tighten the tank cap as tightly as possible, to minimise the risk that the cap vibrates loose during sawing.
- Never saw with the chainsaw throttle locked. Always operate the throttle manually when sawing.

Increased throw-out risk! Never use a chain sharpened for rip sawing when cross cutting.

Before each work period

- Check the lifting line's condition in particular. Change immediately if any sign of wear is detected. Check that bolted joints and locks in the log bed lift and lock system are fully tightened and that all the moving parts of the sawmill move freely and smoothly.
- Check that the sawmill is completely level and that it is securely fixed to the underlying surface.
- Check that the cutting equipment is correctly assembled. Risk of chain breaks!
- Check that saw unit is pushed fully into position on the guide rail. Throw-out risk on start up!

The sawmill is not to be in any other position than level when in operation. Risk of overturning! The Logosol F2+ should be fastened directly to the underlying surface or to a bedding of planks which increases the area of the load bearing surface.

During operation

- Hold the crank firmly whenever raising or lowering a log. If released, the crank may spin back and hit your hand hard.

Do not place your hand on the inside of the long leg when raising or lowering the log. There is a risk that your hand can be trapped if the lifting line snaps or the crank spins.

- Do not saw short logs that extend less than 0.2 m beyond each log bed. A shorter log can fall off when the log beds are raised!
- The maximum permitted load for the sawmill is 1200 kg.

Always stand to the right of the saw unit when it is in operation. A chains that breaks can be thrown out through the sawdust outlet.

- Keep the worksite free of tools, pieces of wood, sawdust and other items you can trip on.

Turn off the chainsaw after each cut. Never leave the Logosol F2+ unattended such that unauthorized persons can start it.

If any kind of malfunction occurs, stop sawing immediately and turn off the chainsaw until the problem has been resolved. Always keep this in mind. Most accidents with dangerous machines, both the Logosol F2+ and other machines, happen when something goes wrong and the operator attempts to fix it while the machine is still running. A stop seldom shows up on the finished product.

TECHNICAL DATA

Length:	4.0 m
Width:	0.92 m
Height:	1.0 m
Log loading height:	0.6 m
Weight:	65 kg
Weight with carriage for chainsaw:	68 kg
Max. recommended log diameter:	0.7 m
Min. log length in standard configuration:	2.4 m
Max. log length in standard configuration:	3.7 m

DESCRIPTION OF MACHINE

- The aluminium components are anodized and completely rustproof. The outer surface is as wear-resistant as tempered steel, has a low friction coefficient and is easy to keep free of resin and sawdust.
- Adjustable feet make it easy to compensate for uneven surfaces.
- Clear scales show the height of the log beds. Extra measuring rods are available as accessories to show the set sawing height.
- The crank axle runs through maintenance-free bronze bearings that do not wear out.
- The slide rails use low-friction plastic that has a long lifetime thanks to the fine surface of the aluminium components.
- The settings for sawing parallel to the grain of conical logs are quick and simple to set. (The log beds should be set at different heights for more than half of the cuts to get an acceptable yield.)
- There are many accessories available for the Logosol F2+.

Maintenance

The Logosol F2+ should be kept clean, and all plastic parts should be lubricated with Logosol's lubricant (7500-001-5050) or silicone lubricant (7500- 001-5067). Regularly check the condition of the lifting lines.

The tempered ratchet bar is only lightly protected against rust and should be kept coated with a thin layer of Superflo (9999-000-5115) to prevent rust.

Service

The sawmill must be inspected regularly and maintained as needed.

Only carry out the maintenance and repairs specified in the manual. Other repairs must be carried out by Logosol or by authorized Logosol dealers.

Do not make any alterations to the construction of the sawmill as this can increase the risk of accidents. After service, the sawmill should be restored to its original condition. Logosol accepts no liability for damage that occurs while working on an improperly modified machine.

COMPONENTS: BOXES IN SHIPMENT

Your LOGOSOL F2 shipment consists of the following boxes. Check that all of these boxes are included in the shipment when receiving it.

4 metres (two log lifters) 4530-000-2000

1 x 4525-001-0010

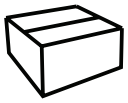

2 x 4525-100-3000

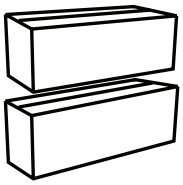

4 x 4525-010-2000

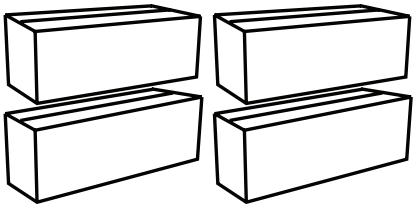

5 metres (three log lifters) 4530-000-2005

1 x 4525-001-0010

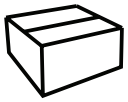

3 x 4525-100-3000

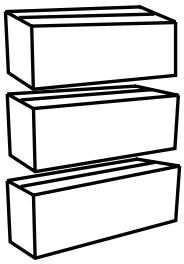

5 x 4525-010-2000

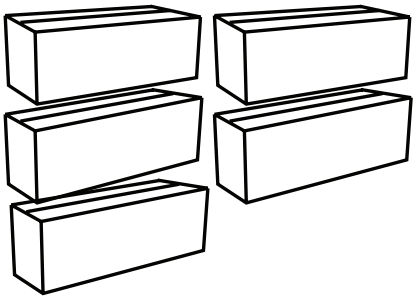

6 metres (three log lifters) 4530-000-2006

1 x 4525-001-0010

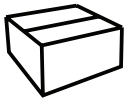

3 x 4525-100-3000

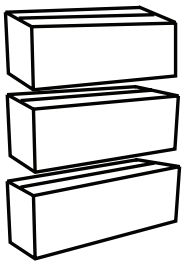

6 x 4525-010-2000

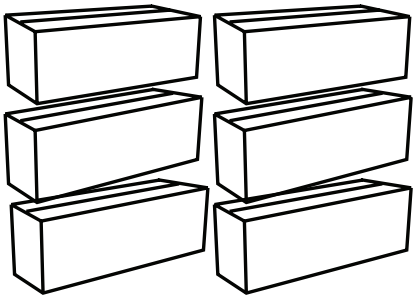

1 x 4530-010-2100

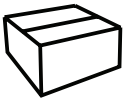

4525-100-3000

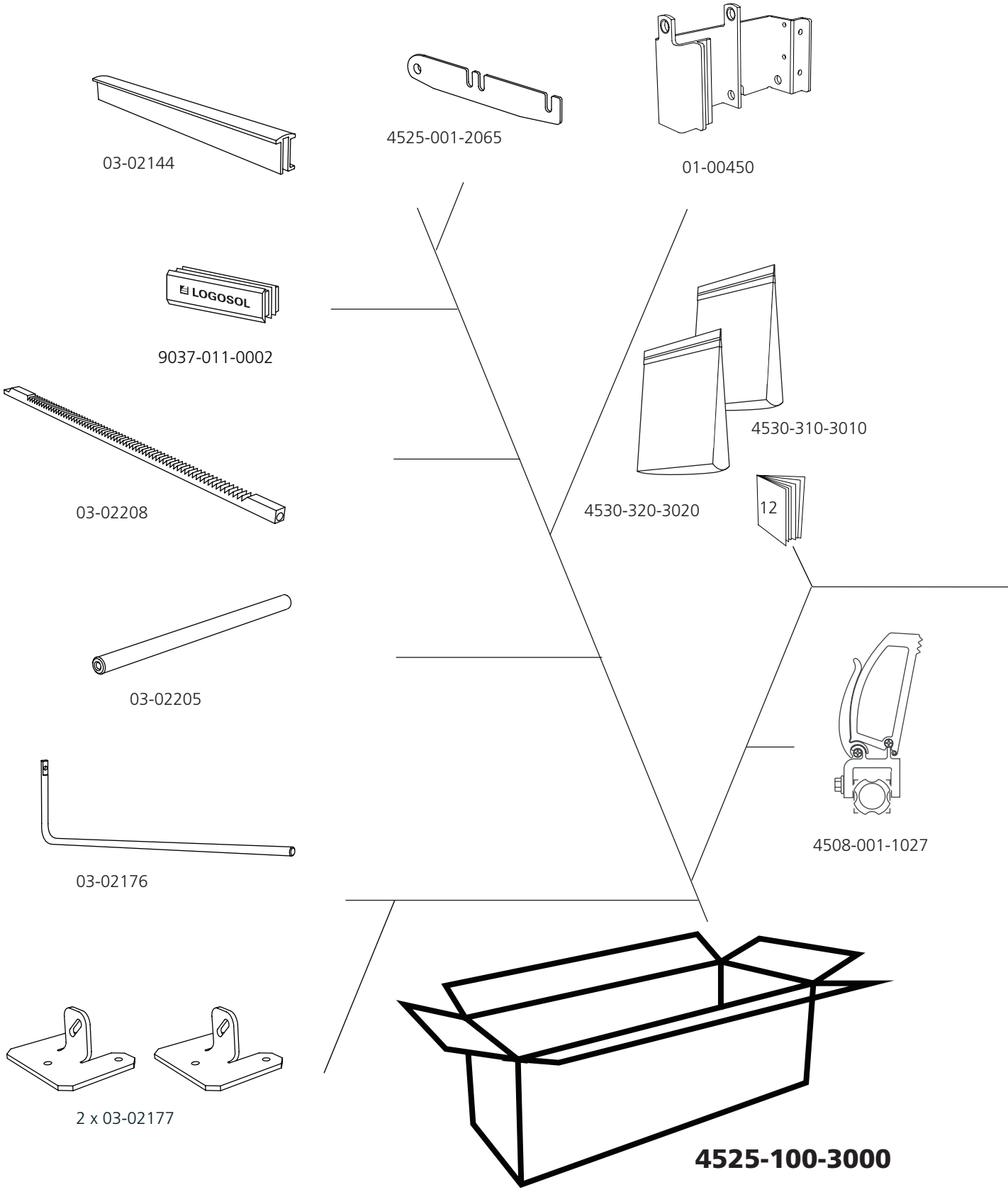

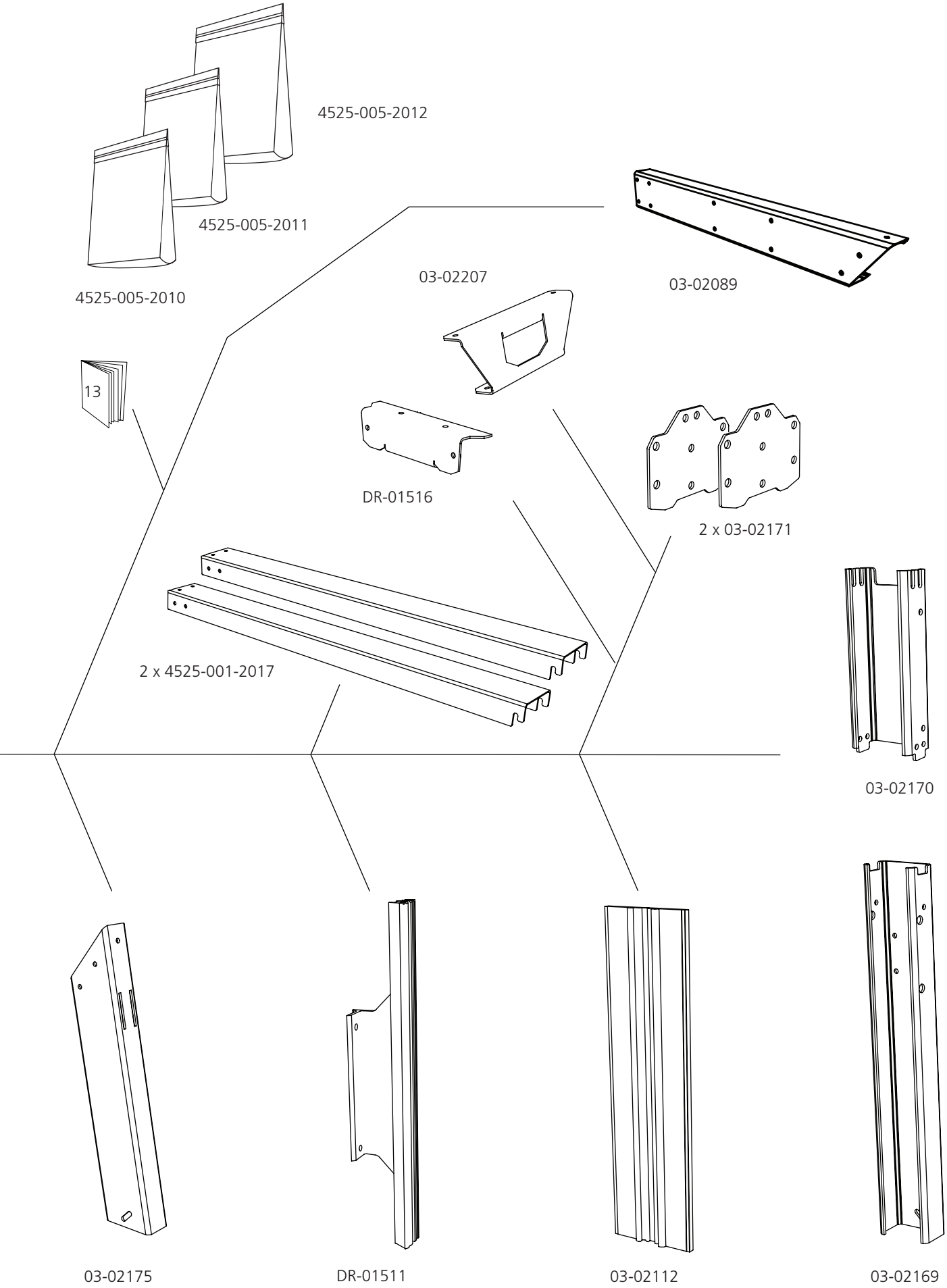
4525-005-2012
4525-005-2011
4525-005-2010
03-02089
03-02207
13
DR-01516
2 x 03-02171
2 x 4525-001-2017
03-02170
03-02175
DR-01511
03-02112
03-02169

4525-010-2000

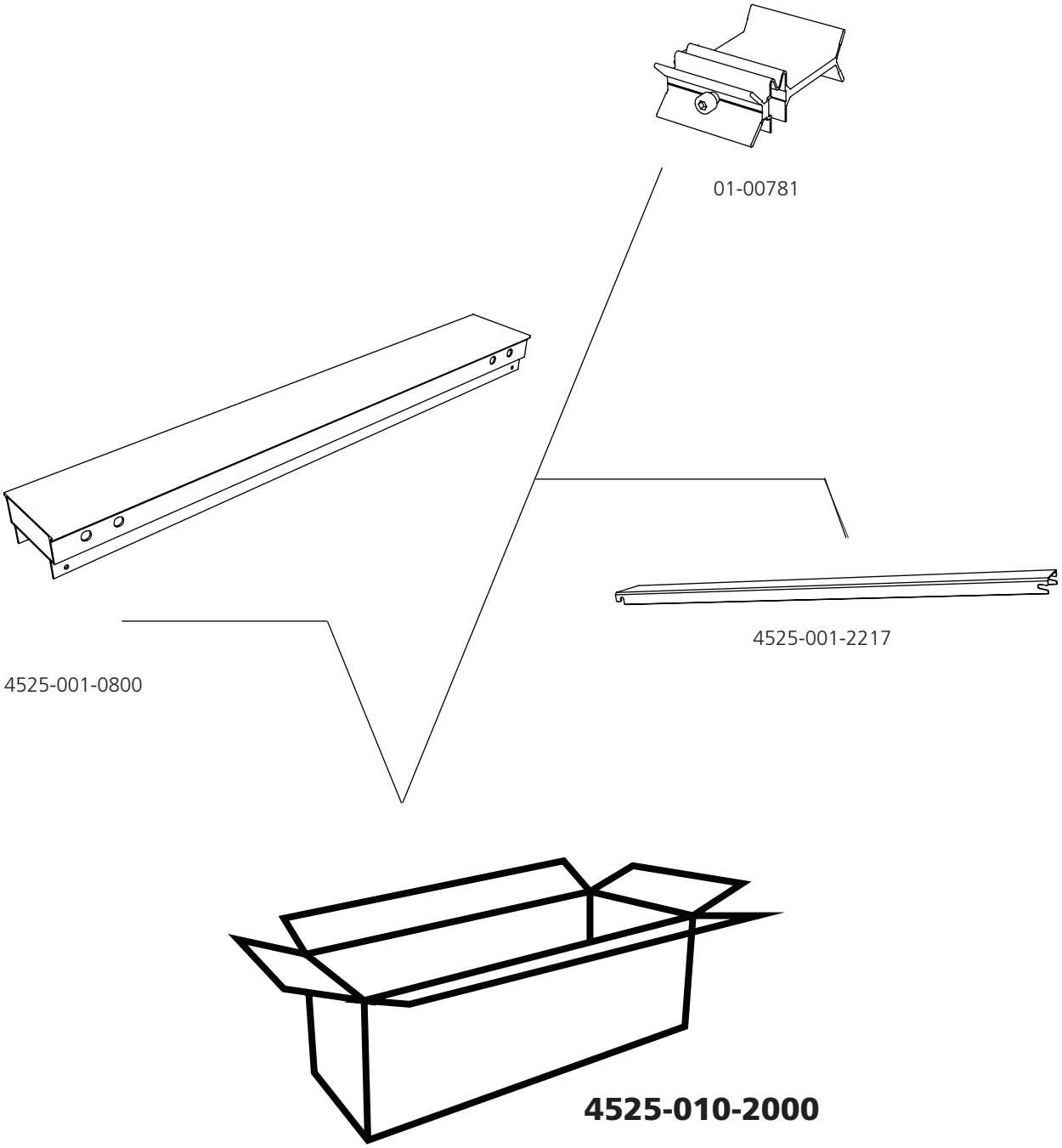

4525-001-0010

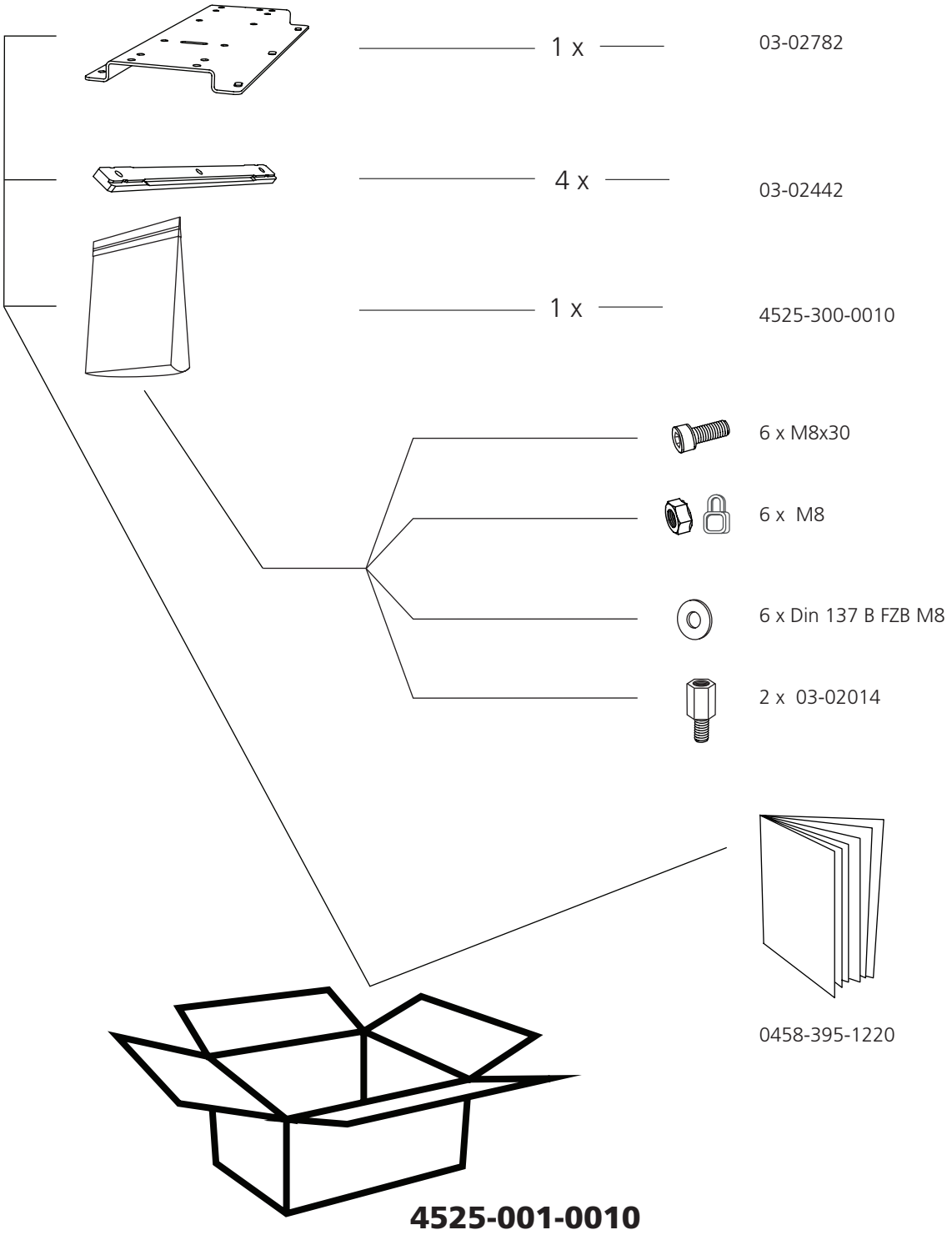

4525-100-3000

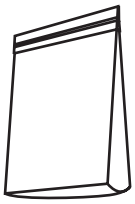

4530-310-3010

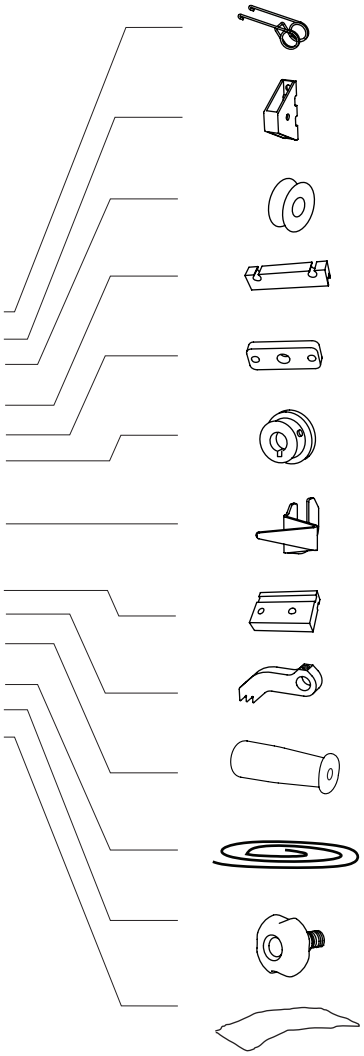

1 x	03-02118
3 x	03-02159
6 x	4507-001-0300
2 x	4507-001-1090
1 x	03-02160
2 x	4507-001-1105
1 x	03-02204
1 x	4507-001-1190
1 x	03-02162
1 x	9026-011-0002
1 x	4525-001-1080
1 x	4507-001-1027
1 x	

4530-320-3020

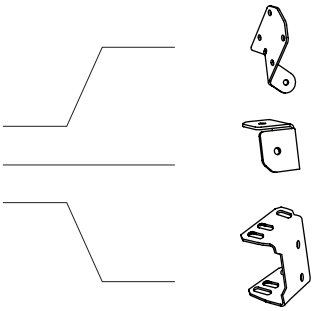

1 x	03-02178
1 x	03-02179
1 x	03-02202

4525-100-3000

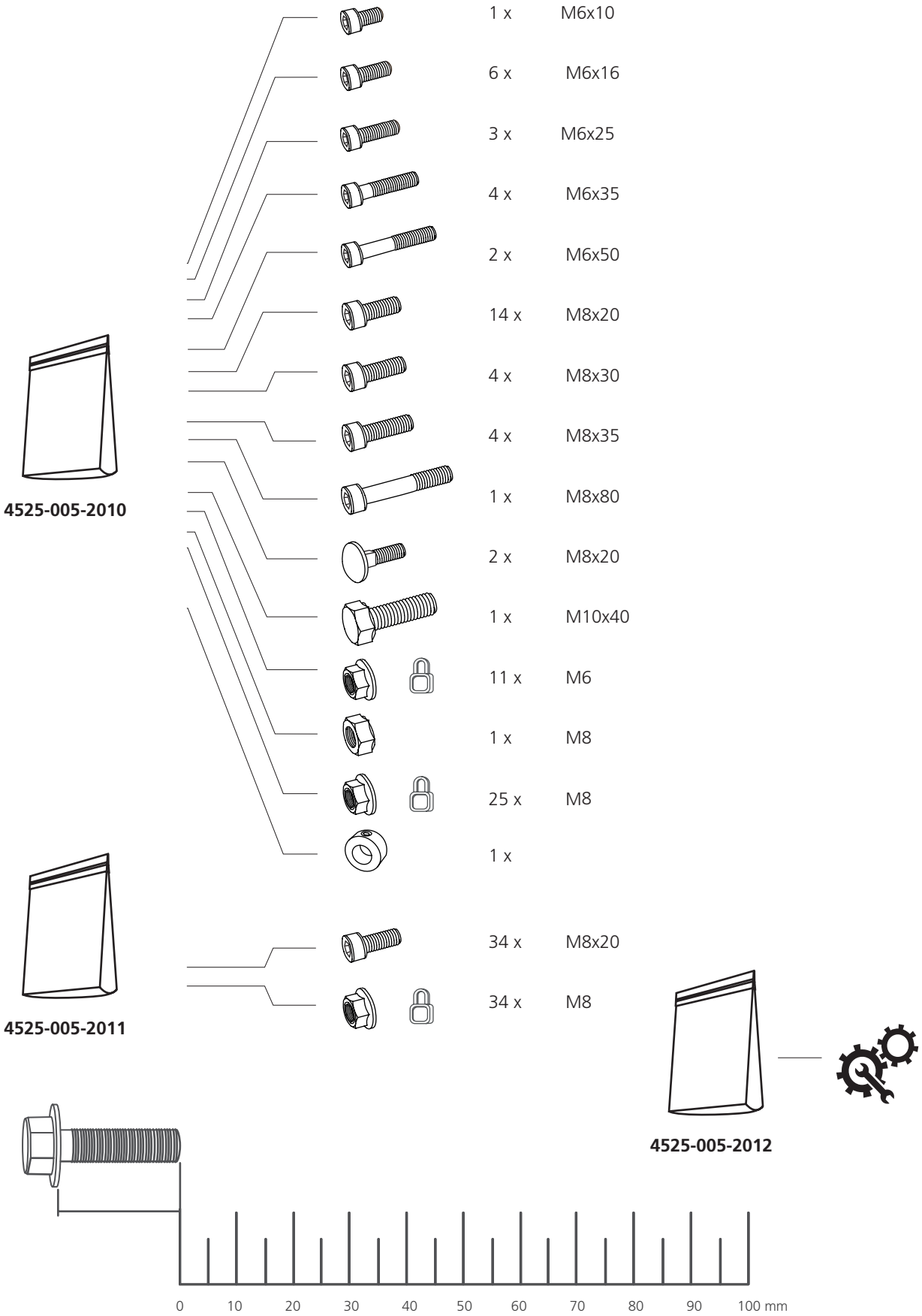

BOLTS & NUTS

Definition of fasteners.

Shoulder bolt

Phillips bolt

Slotted bolt

Set screw

Hex nut

Flange nut

Flat washer

Allen bolt

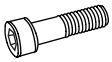
Partial thread Allen bolt

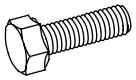
Hex bolt

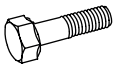
Partial thread hex bolt

Flange bolt

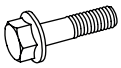
Partial thread flange bolt

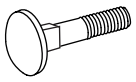
Carriage bolt

Spare parts

ADDITIONAL SYMBOLS

The following symbols are used as supplements to the symbols above to describe the design or function of the fasteners.

Low

Tensilock

Lock

Countersunk

DIAMETER & LENGTH

The size of a fastener is written as a diameter measurement **(M)** ISO 68-1. For bolts, this is followed by a length measurement. The length of the bolt is measured from below the head to the tip of the bolt.

(Diameter)		**(Length)**
M8	x	20

TOOLS REQUIRED

Verktyg ingår ej vid leverans av sågverket.

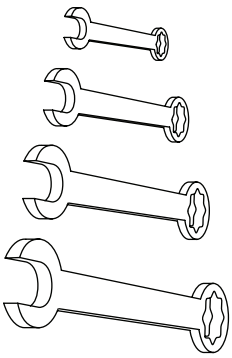

2 x 10 mm

1 x 13 mm

1 x 16 mm

1 x 19 mm

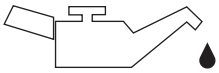

1 x

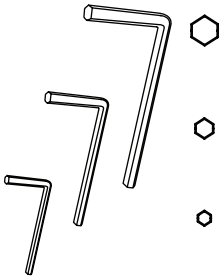

1 x 6 mm

1 x 5 mm

1 x 3 mm

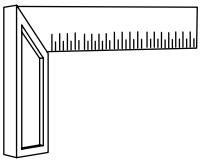

1 x

Scan this QR code for complete instruction video.

For best viewing options, see the video on the YouTube app or webpage.

Scan QR code in each step for individual video.

Here we go!

We recommend that you start with assembling the log lifters. These are identical, and all components needed are found in the log lifter boxes.

We recommend that you place all fastening elements on a tray or the like to facilitate finding the bolts, nuts, etc.

Open one of the log lifter boxes and start assembling.

Wear protective gloves during assembly, as there may be sharp edges.

Symbol: Assembly

4525-100-3000

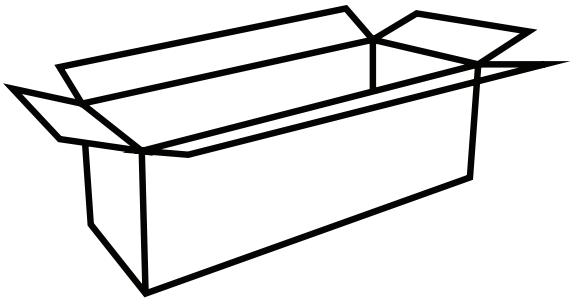

4525-100-3000

1

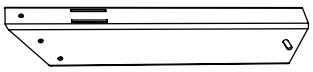
1 x

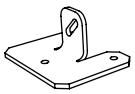
1 x

1 x M8x20

1 x M8

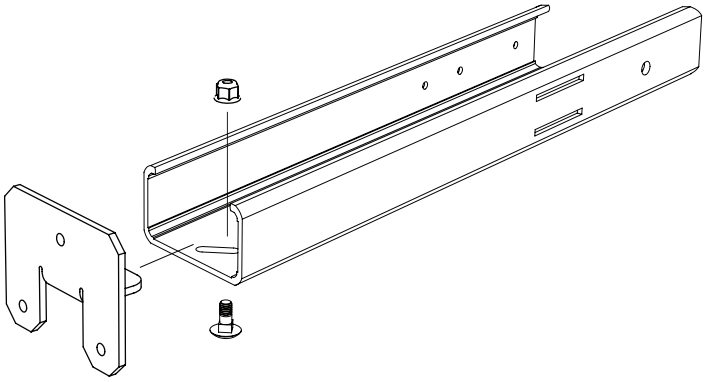

2

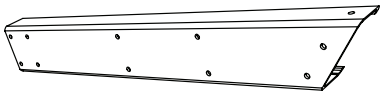
1 x

1 x

1 x

8 x M8x20

8 x M8

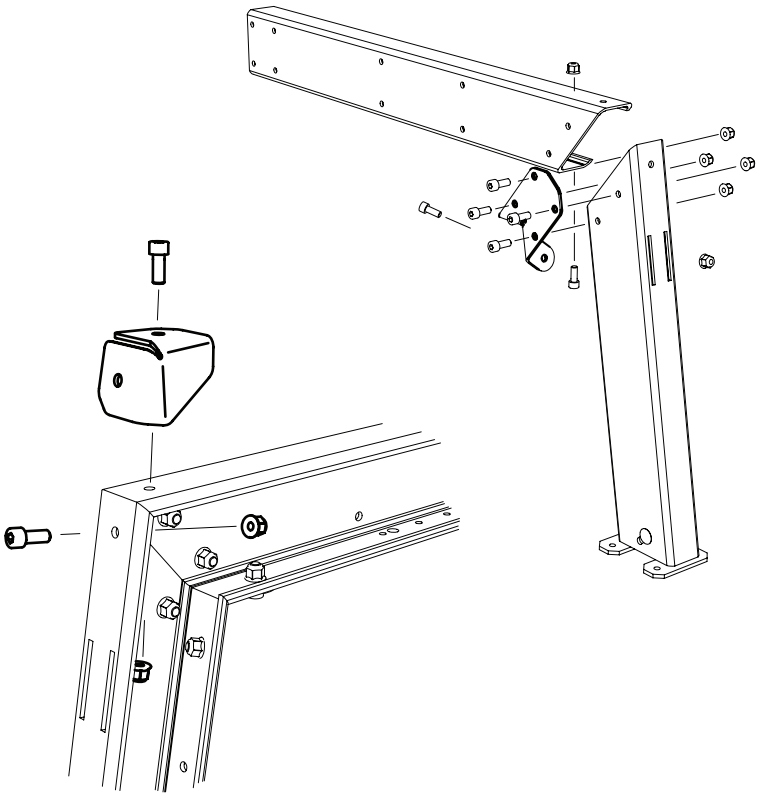

4525-100-3000

3

1 x

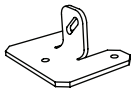

1 x

1 x M8x20

4 x M8x20

5 x M8

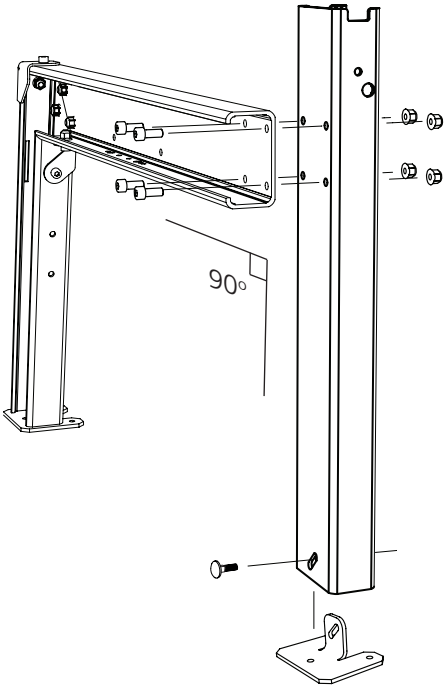

4

1 x

1 x

1 x M10x40

1 x

2 x M6x35

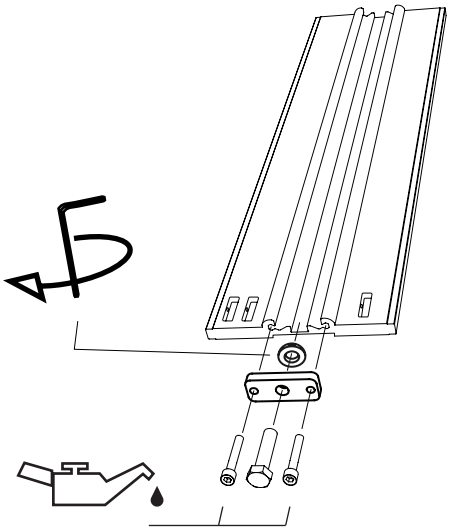

5

3 x

2 x M6x50

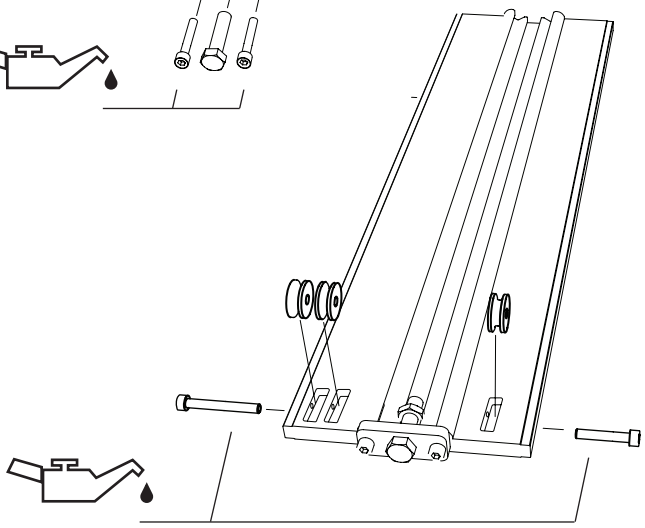

4525-100-3000

6

1 x

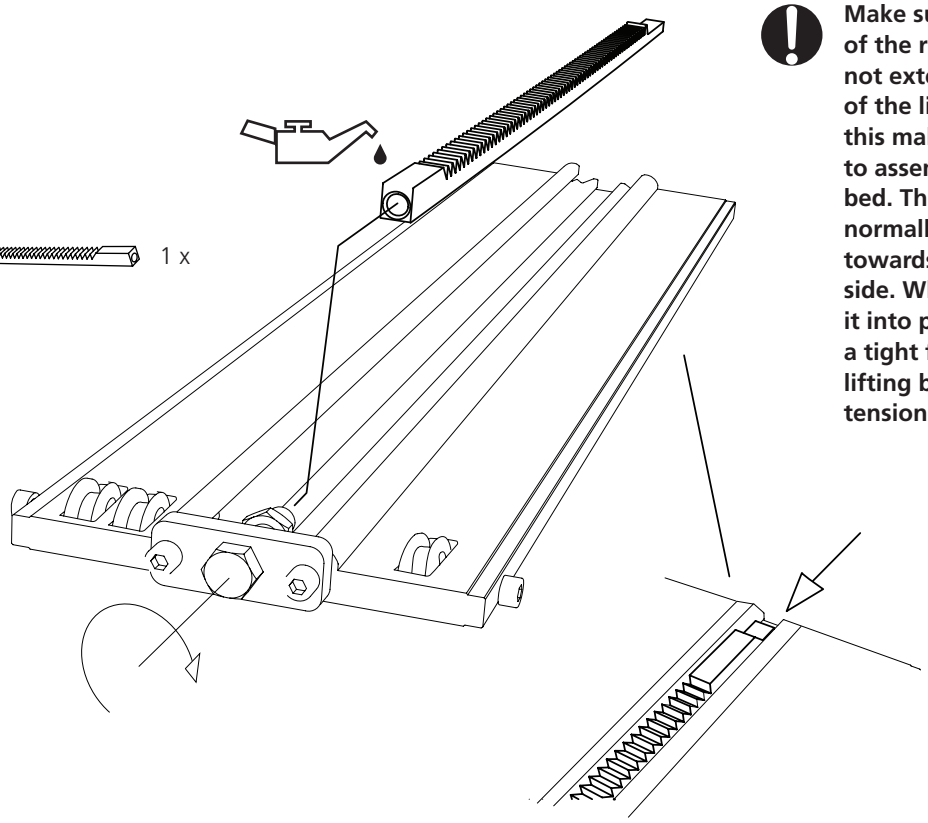

Make sure that the end of the ratchet bar does not extend over the end of the lifting beam, since this makes it impossible to assemble the log bed. The ratchet bar is normally slightly bent towards the toothed side. When screwing it into place, it will get a tight fit against the lifting beam by the tension created.

7

3 x

3 x

3 x M6x25

3 x M6

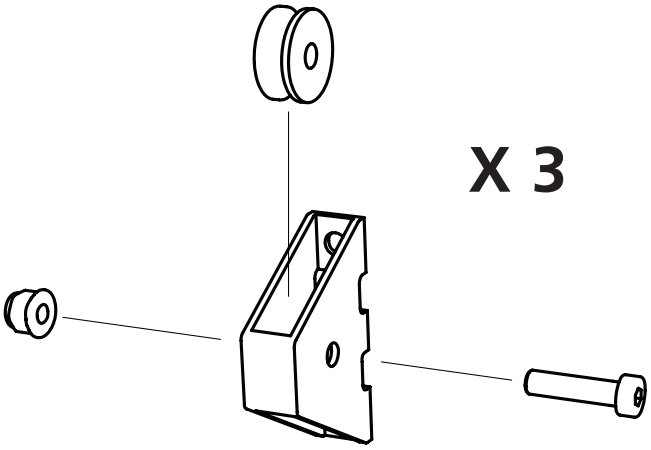

4525-100-3000

8

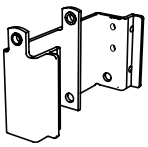
1 x

1 x

2 x M6x16

2 x M6

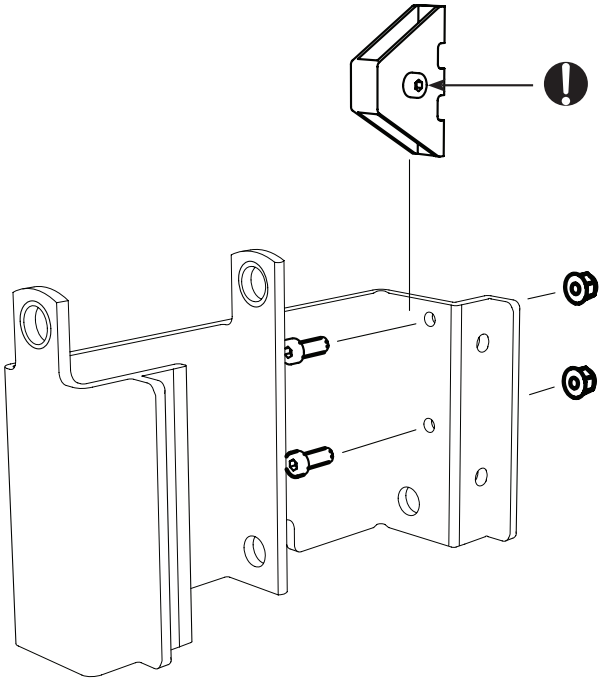

9

1 x

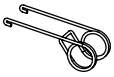
1 x

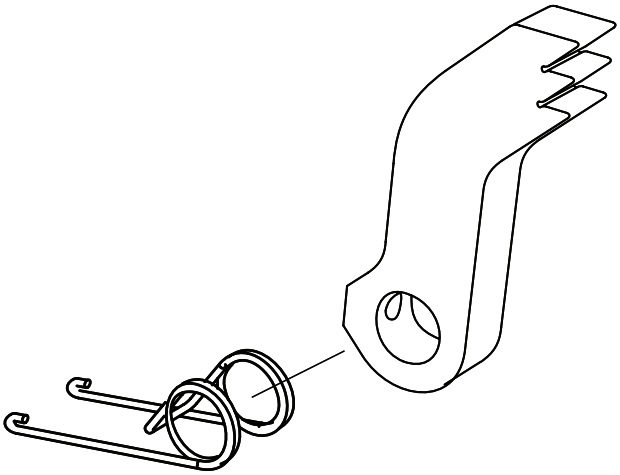

4525-100-3000

9:1

1 x

1 x M6x10

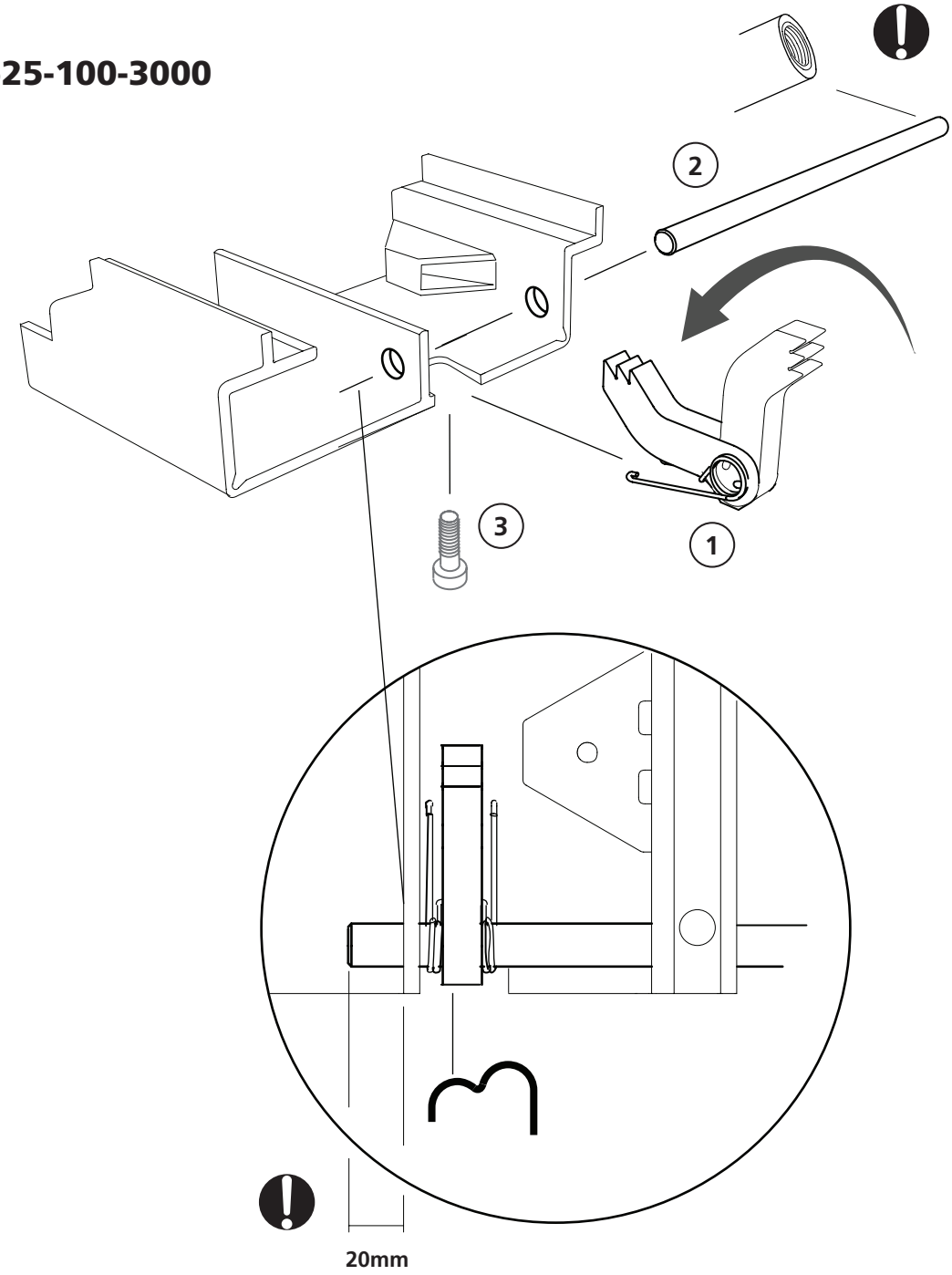

10

2 x

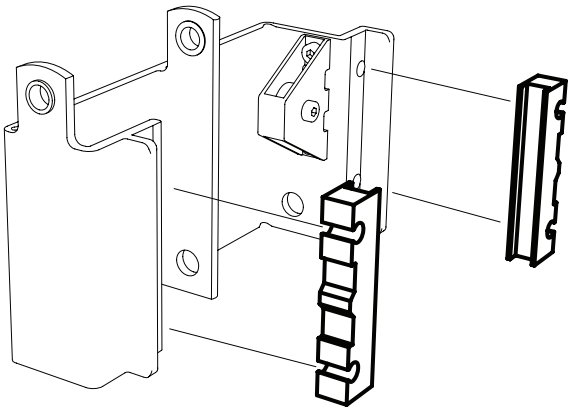

4525-100-3000

11

4 x M8x35

4 x M8

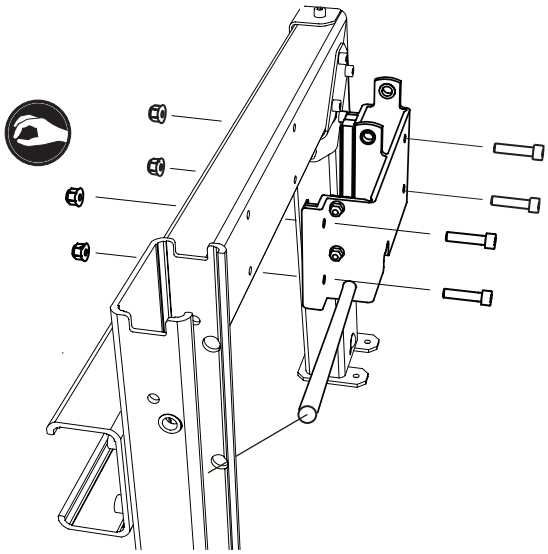

12

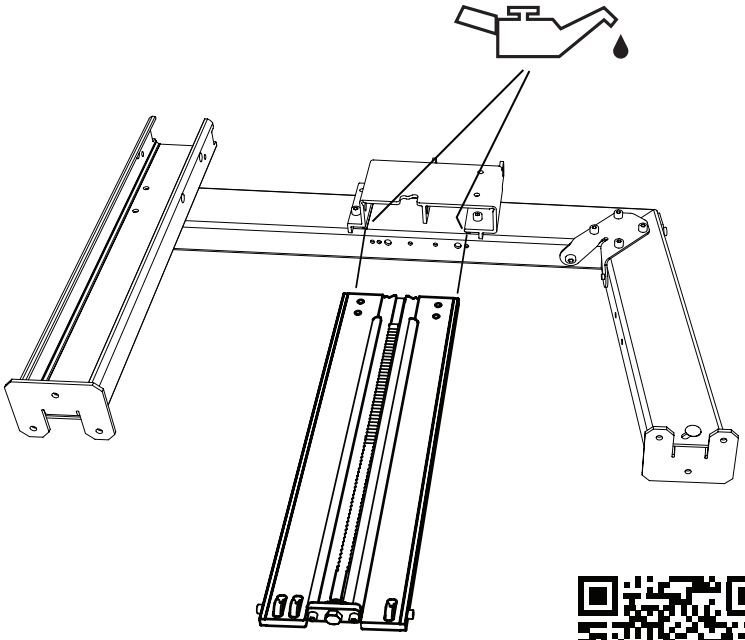

13

1 x

1 x

1 x

2 x M6x35

2 x M6

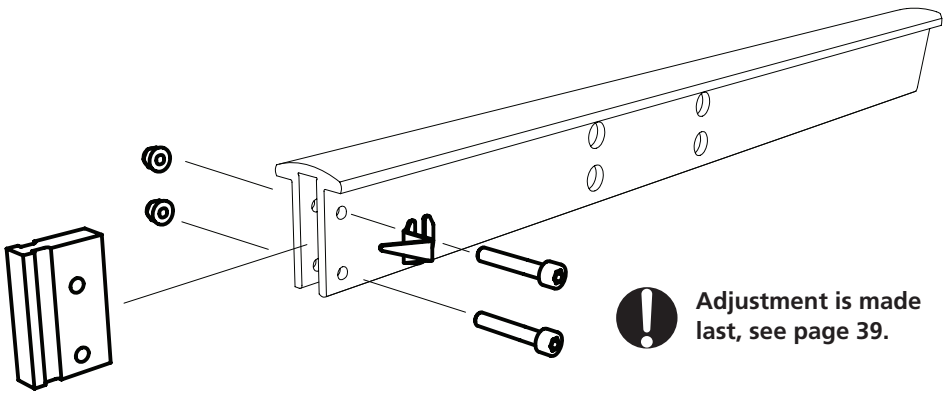

Adjustment is made last, see page 39.

4525-100-3000

14

4 x M8x30

4 x M8

Note that the bolts have to be threaded into the log bed and the lifting beam.

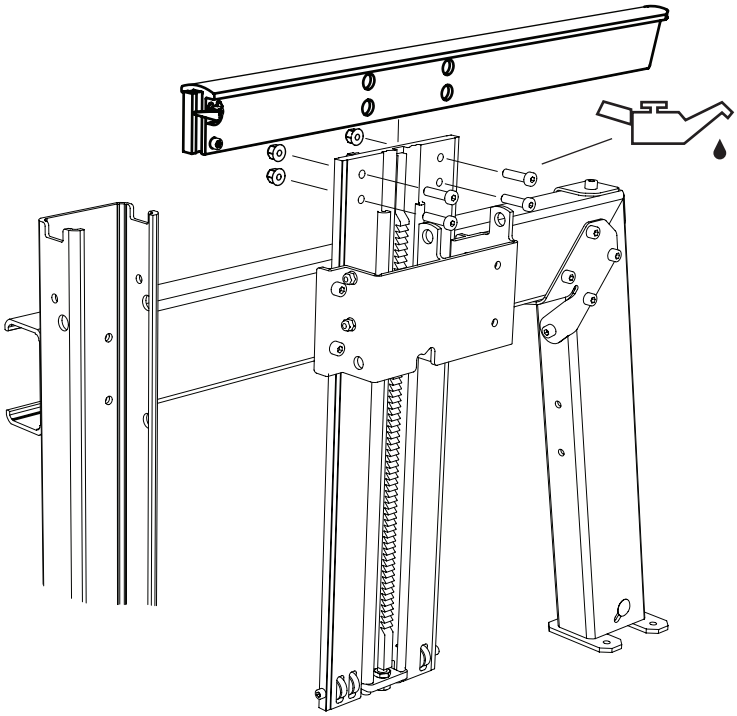

15

2 x

4 x M6x16

4 x M6

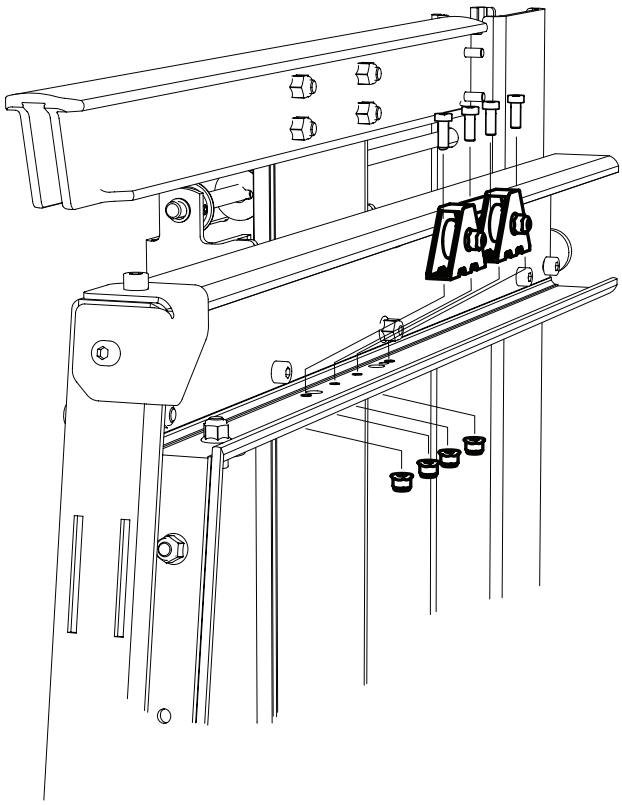

4525-100-3000

16

1 x

1 x

1 x M8x80

1 x M8

1 x M8

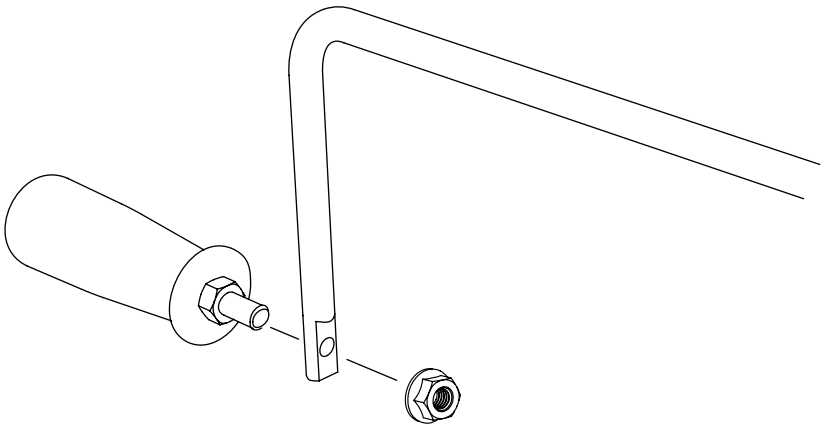

17

2 x

1 x

1 x

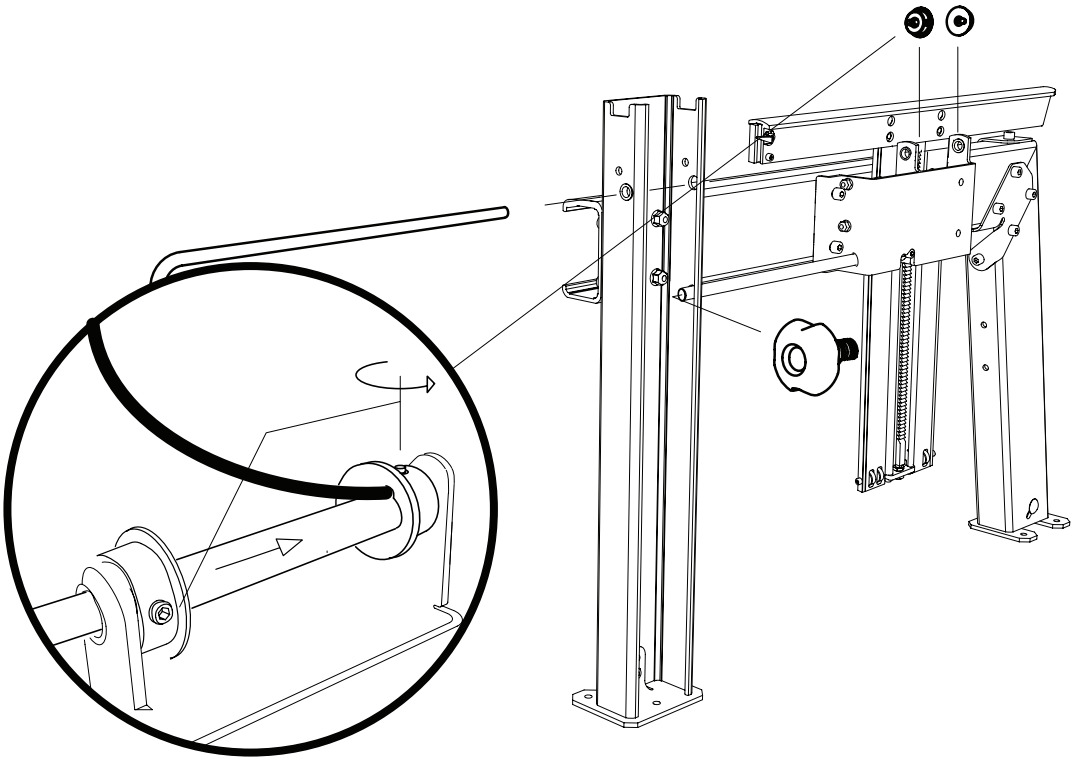

4525-100-3000

18

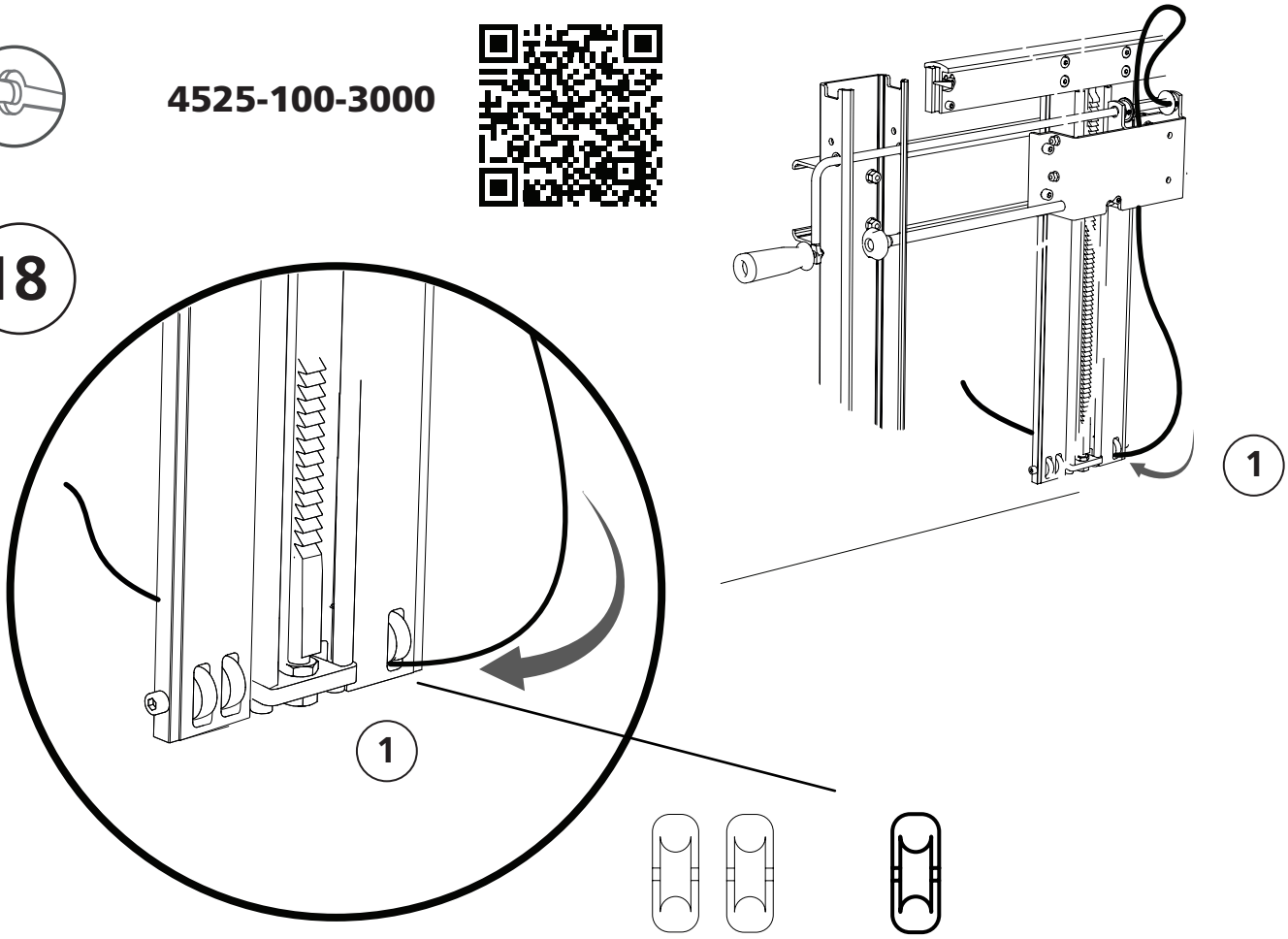

18:1

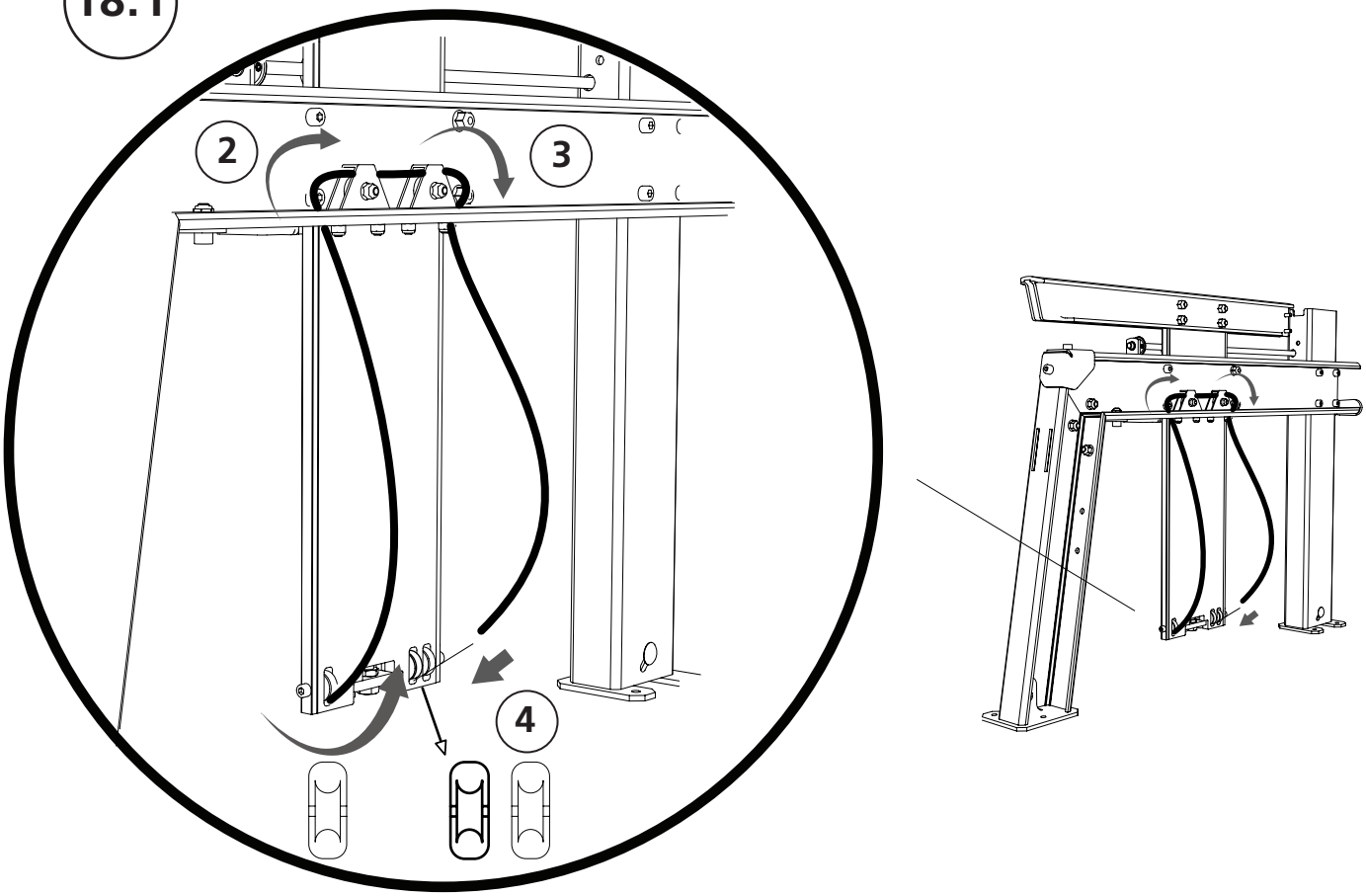

4525-100-3000

18:2

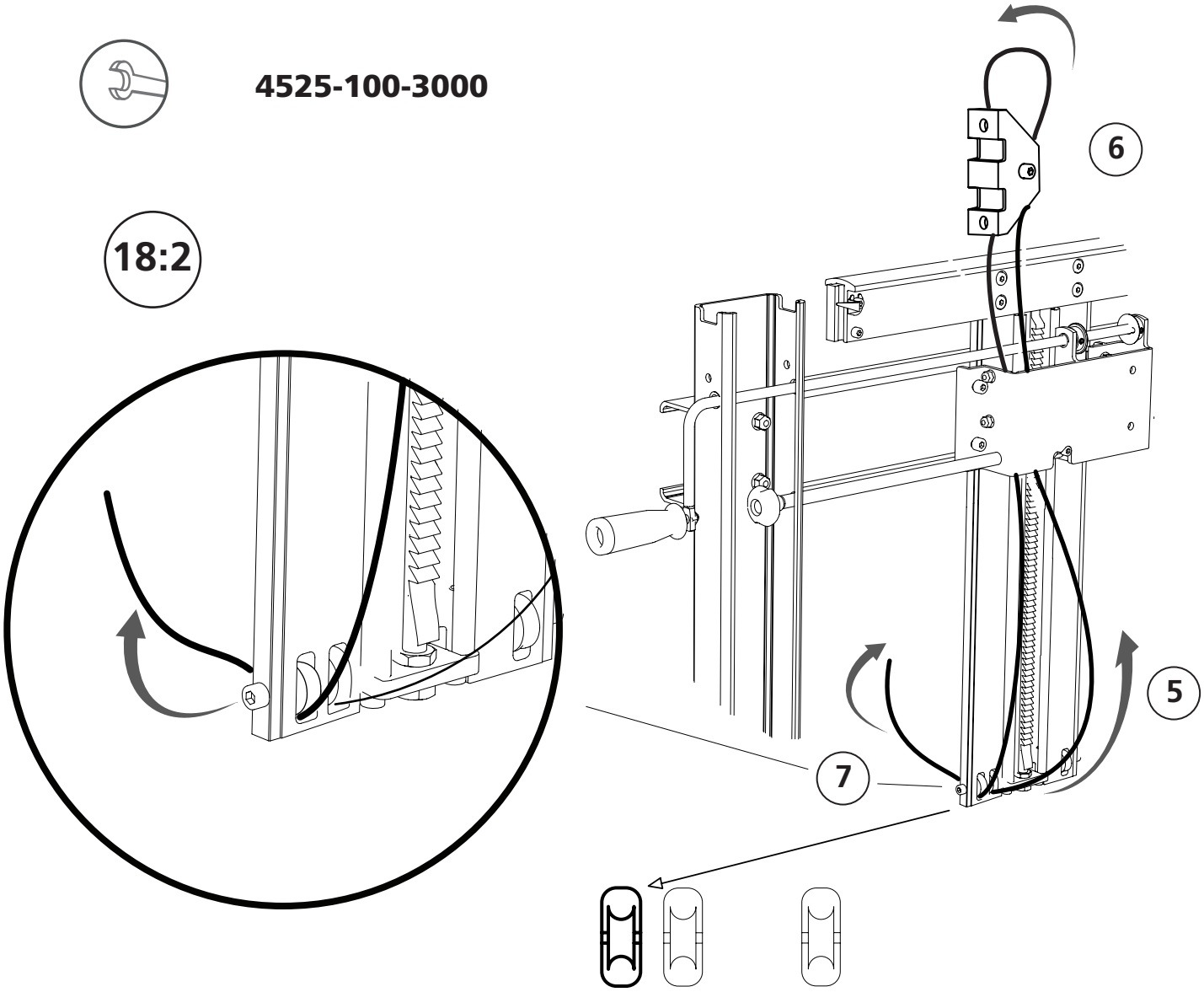

18:3

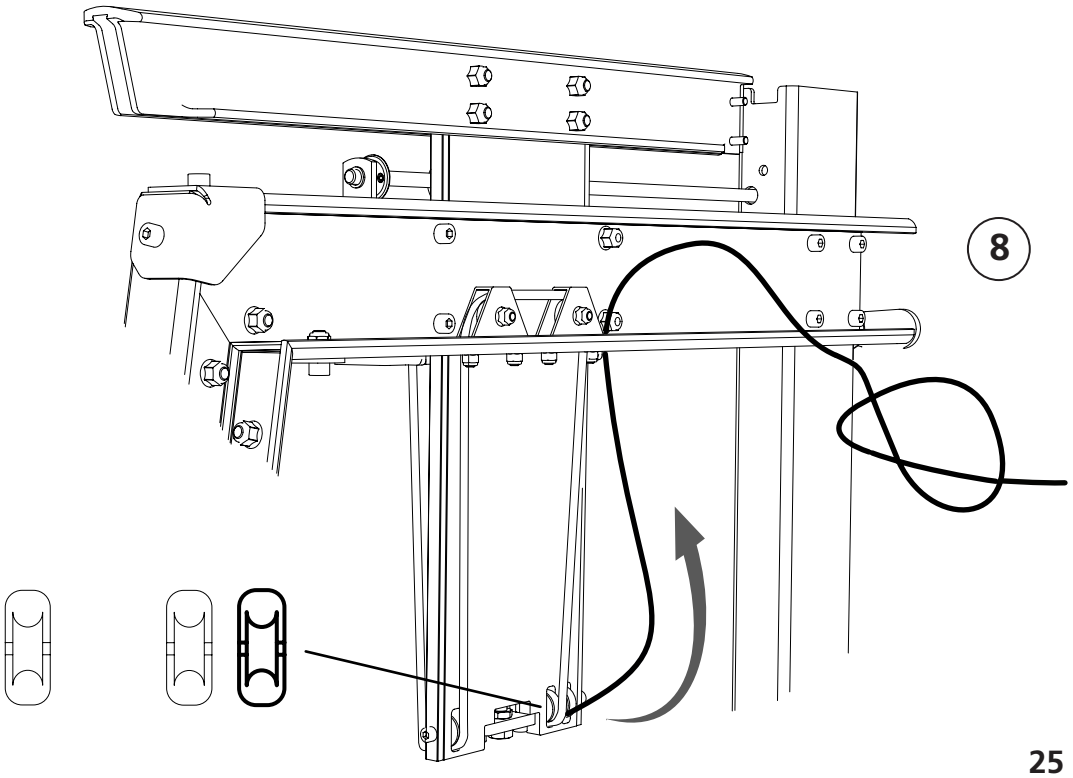

4525-100-3000

19

1 x

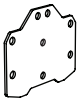

2 x

4 x M8x20

4 x M8

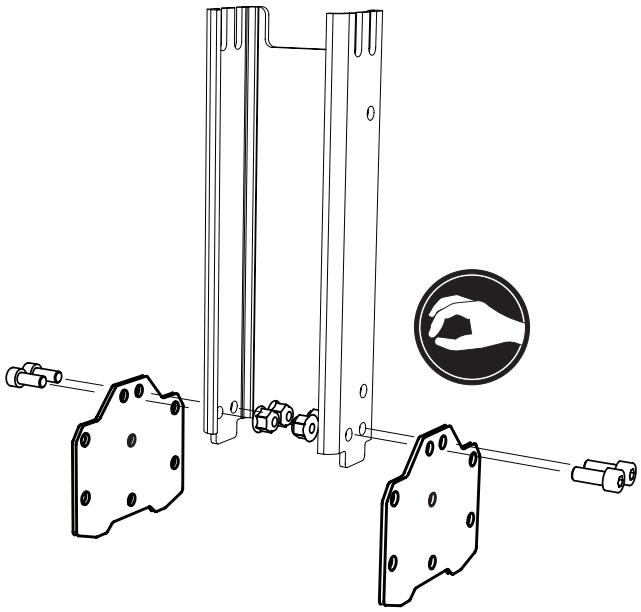

20

1 x

2 x M8x20

2 x M8

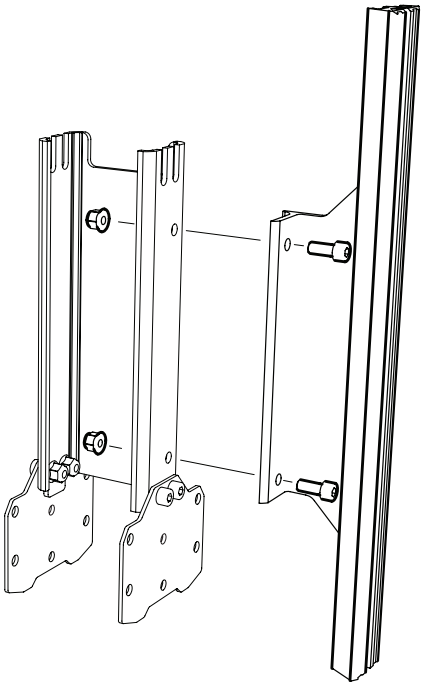

4525-100-3000

21

4 x M8x20

4 x M8

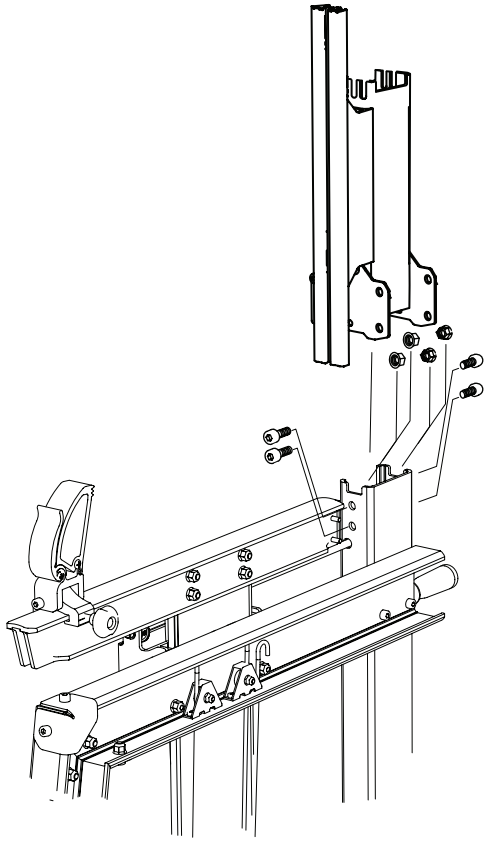

22

1 x

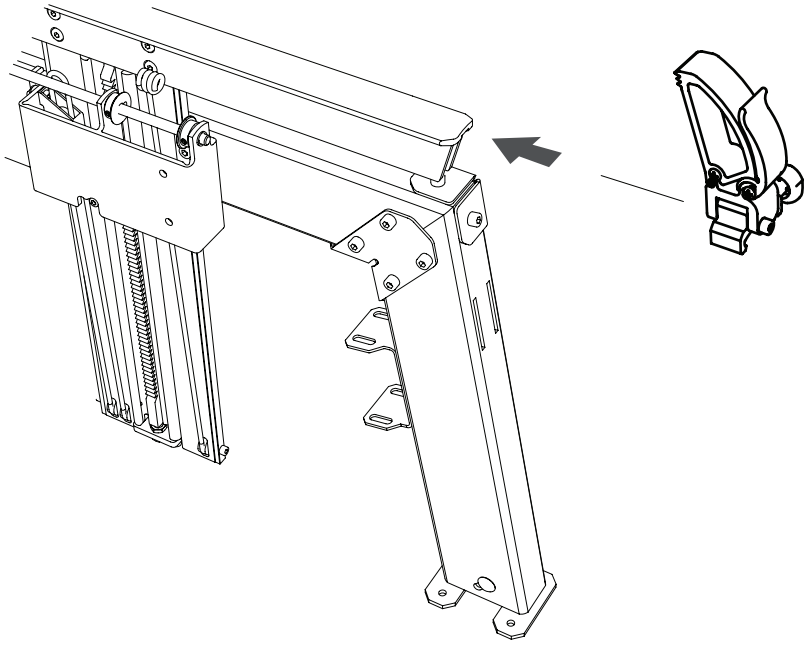

Good job!

Repeat the assembly steps **1-22** to assemble the other log lifter.

4525-100-3000

23

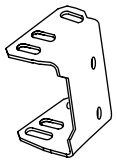

2 x

4 x M8x20

4 x M8

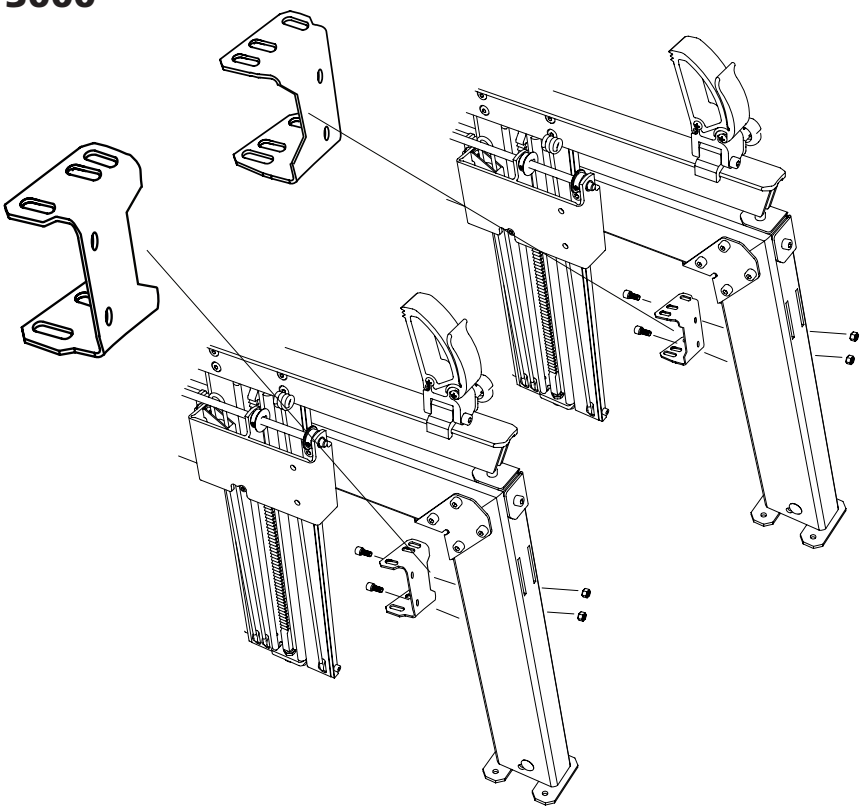

Installing horizontal strut mounts for a 5 m long guide rail. Note in which direction each mount is fitted.

Note that when fitting extensions, some parts may be left over and do not need to be used.

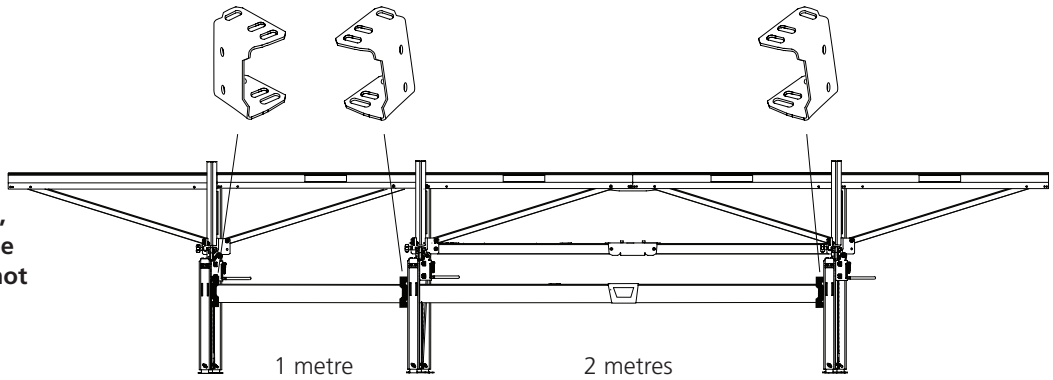

Installing horizontal strut mounts for a 6 m long guide rail. Note in which direction each mount is fitted.

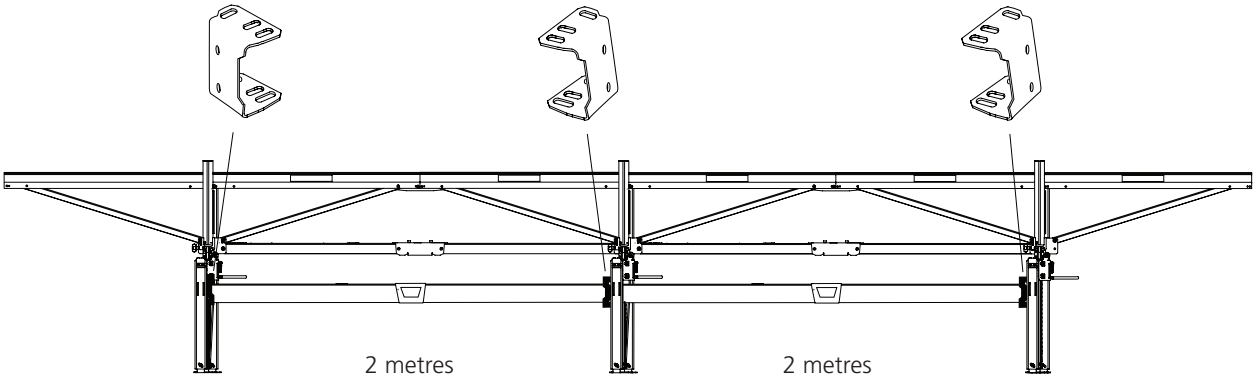

4525-100-3000

24

2 x

2 x

4 x M8x20

4 x M8

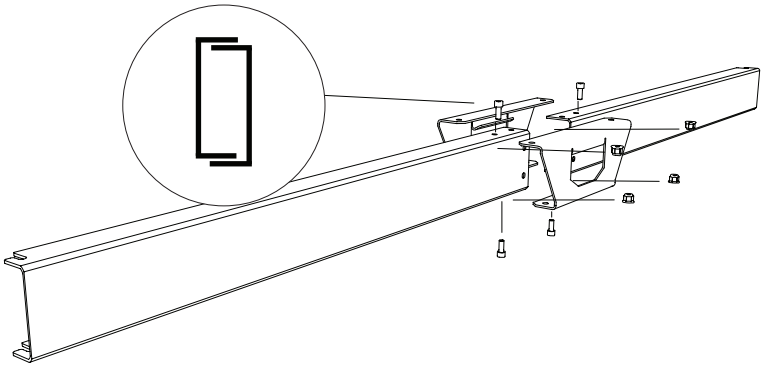

25

4 x M8x20

4 x M8

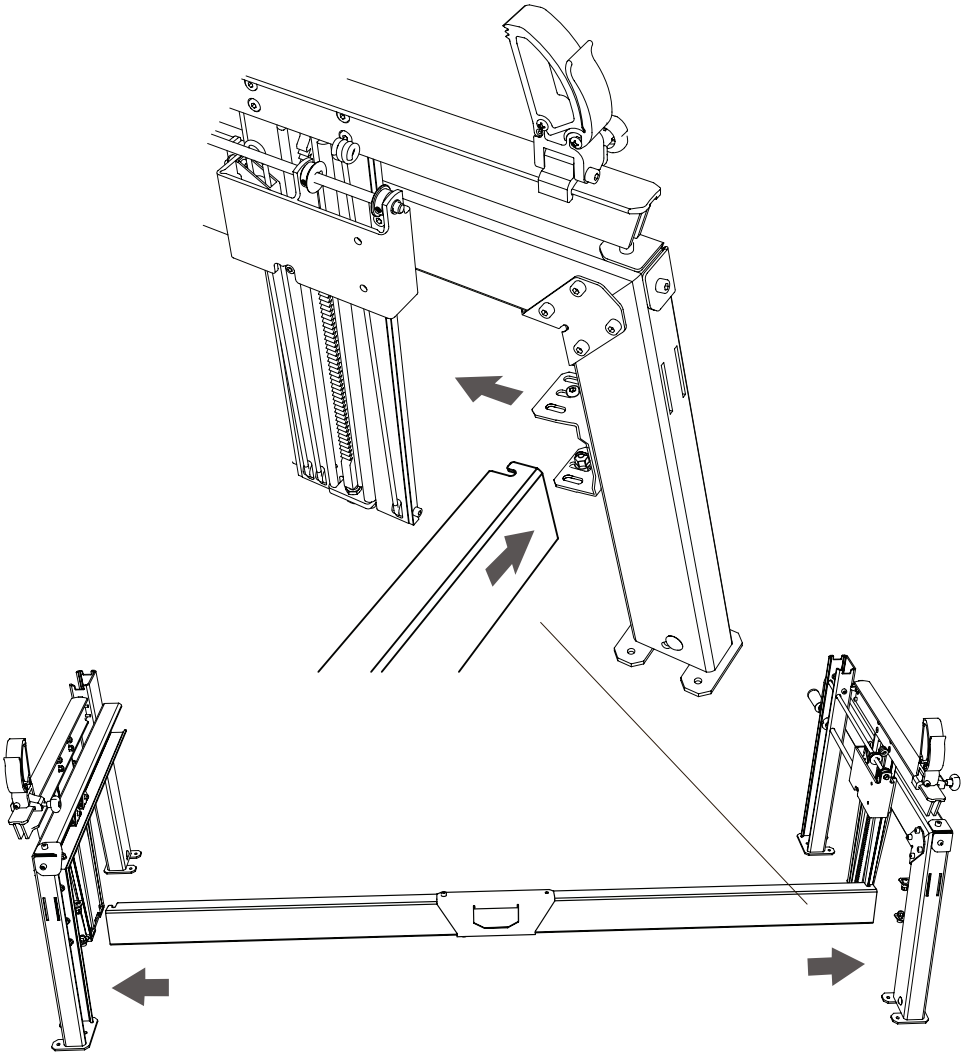

4525-100-3000

26

2 x

2 x

8 x M8x20

8 x M8

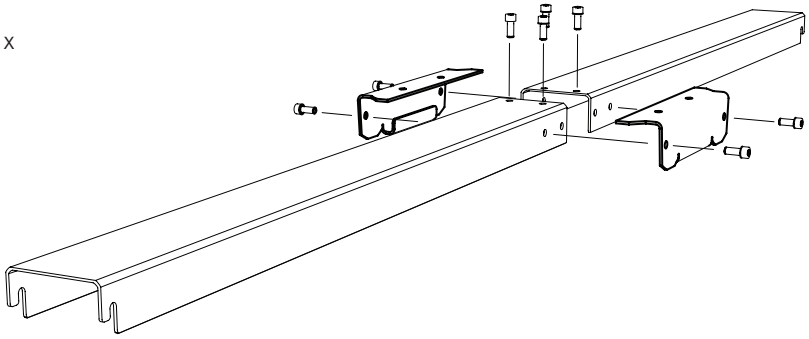

27

4 x M8x20

4 x M8

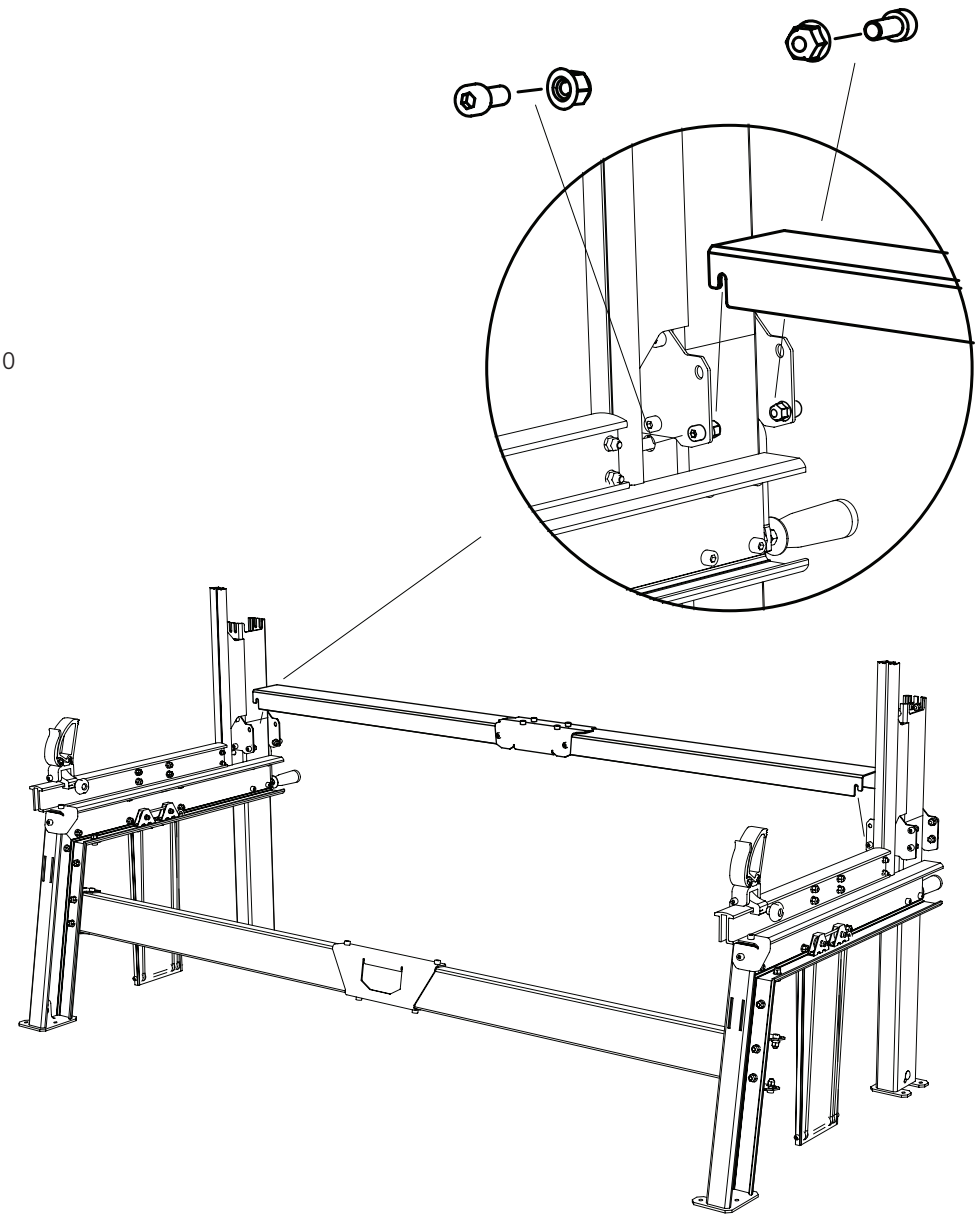

Good job!

To continue with the next step you need
the parts from the guide rail boxes.

Open the guide rail boxes.

Symbol: Assembly

4525-010-2000

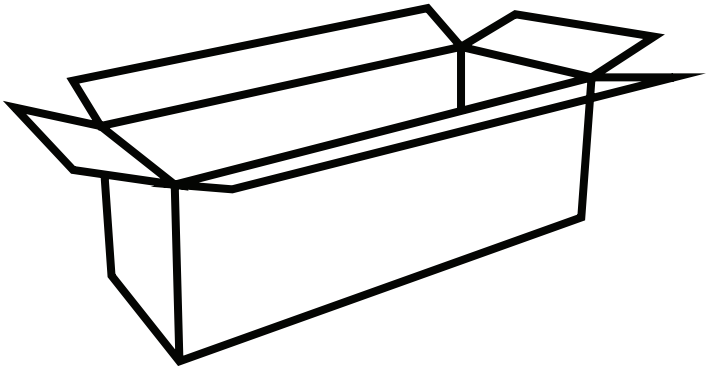

4525-010-2000

The guide rail sections can differ slightly in size. To ensure that the saw carriage will slide smoothly over the joints, the guide rail sections may need to be sanded down a little in the corners. Use the supplied sandpaper to rub off the four corners of the guide rail section, as shown in the illustration.

28

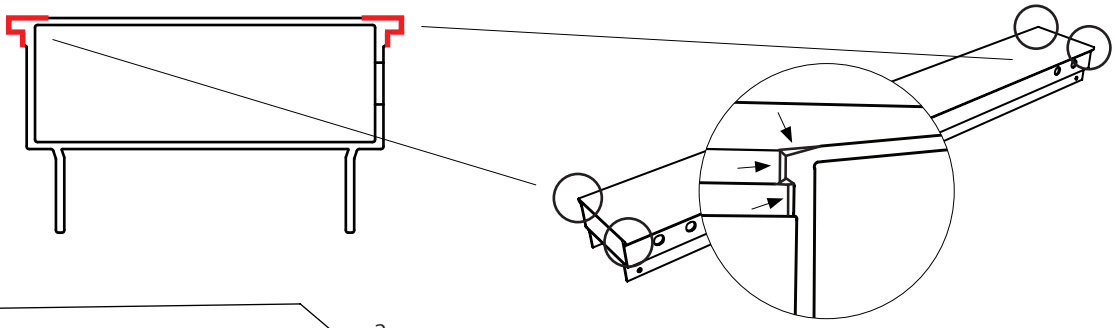

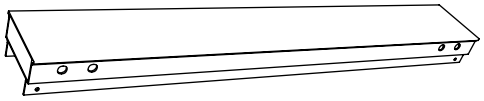

2 x

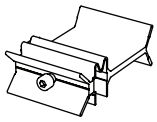

1 x

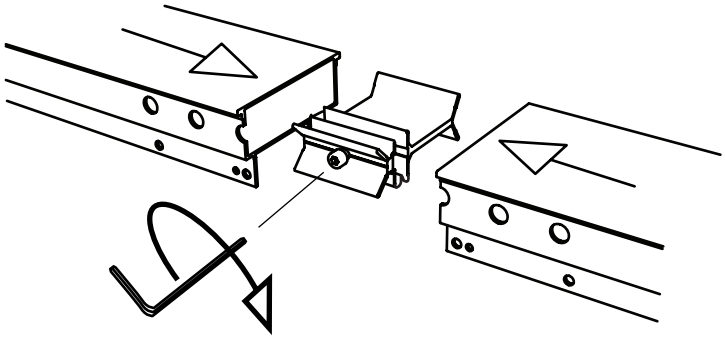

The joint coupler should be fitted in the guide rail with its opening facing up, as in the illustration. The lock nut should be positioned correctly in the nut recess. The bolt should not be tightened when the joint coupler is installed in the guide rail ends.

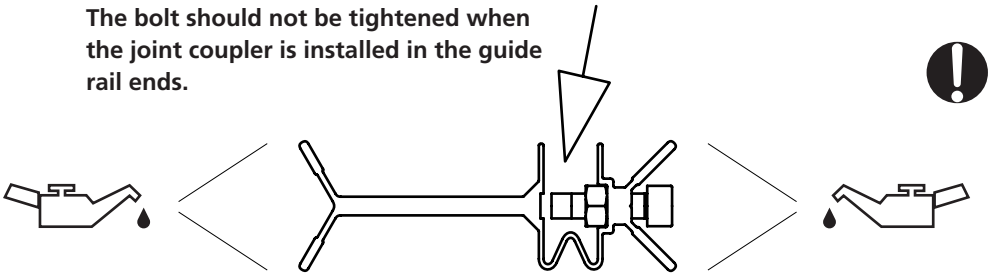

Note that each guide rail section comes with a joint coupler, which means that there will always be one joint coupler left after assembly.

29

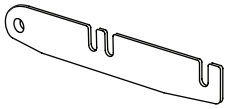

2 x

4 x M8x20

4 x M8

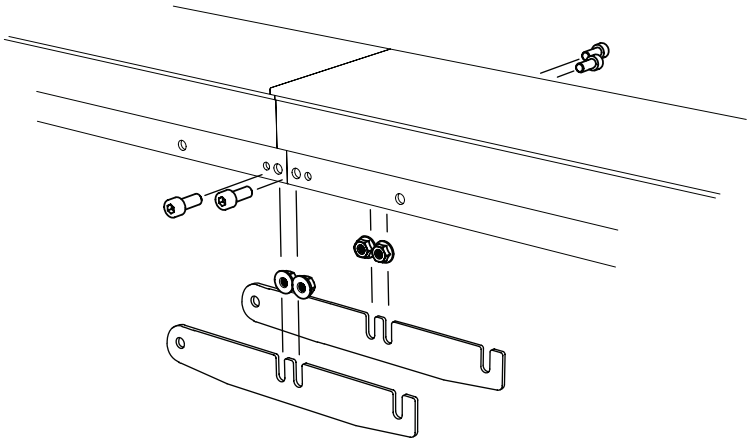

4525-010-2000

30

4 x M8x20

4 x M8

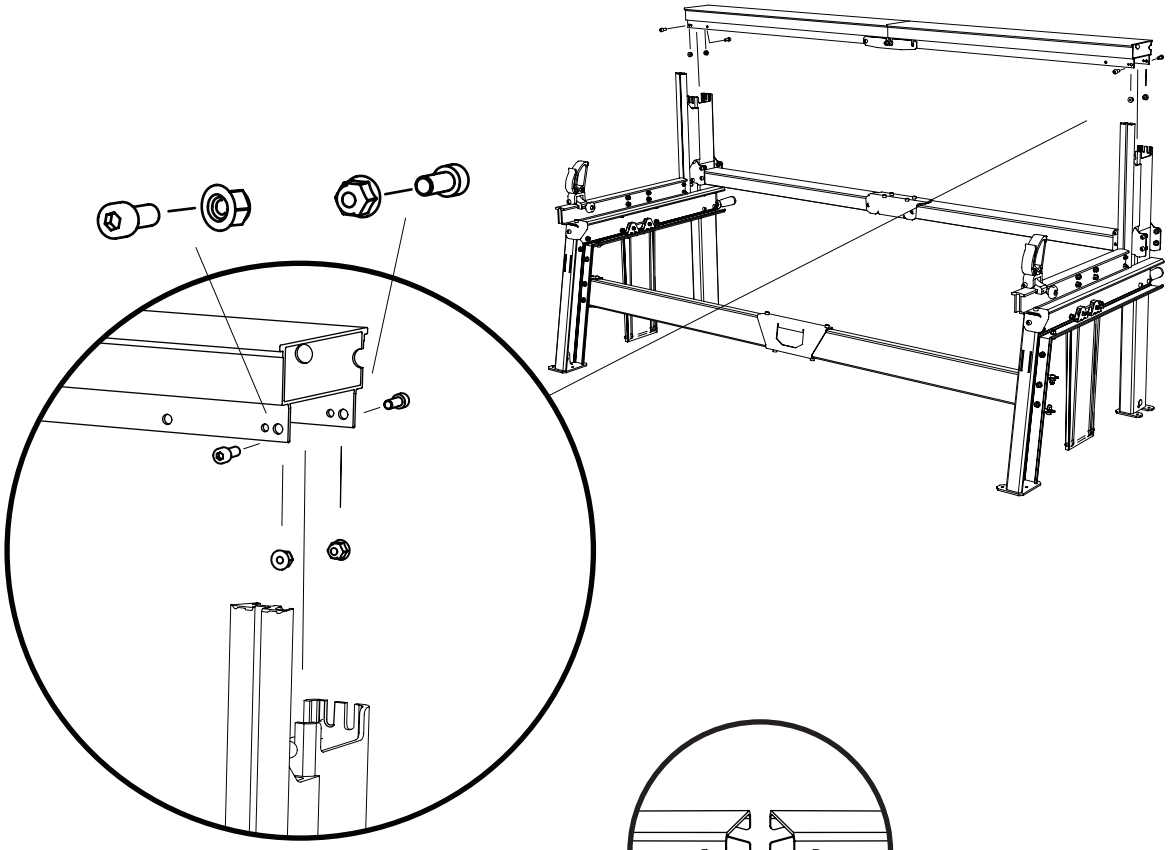

31

2 x

8 x M8x20

8 x M8

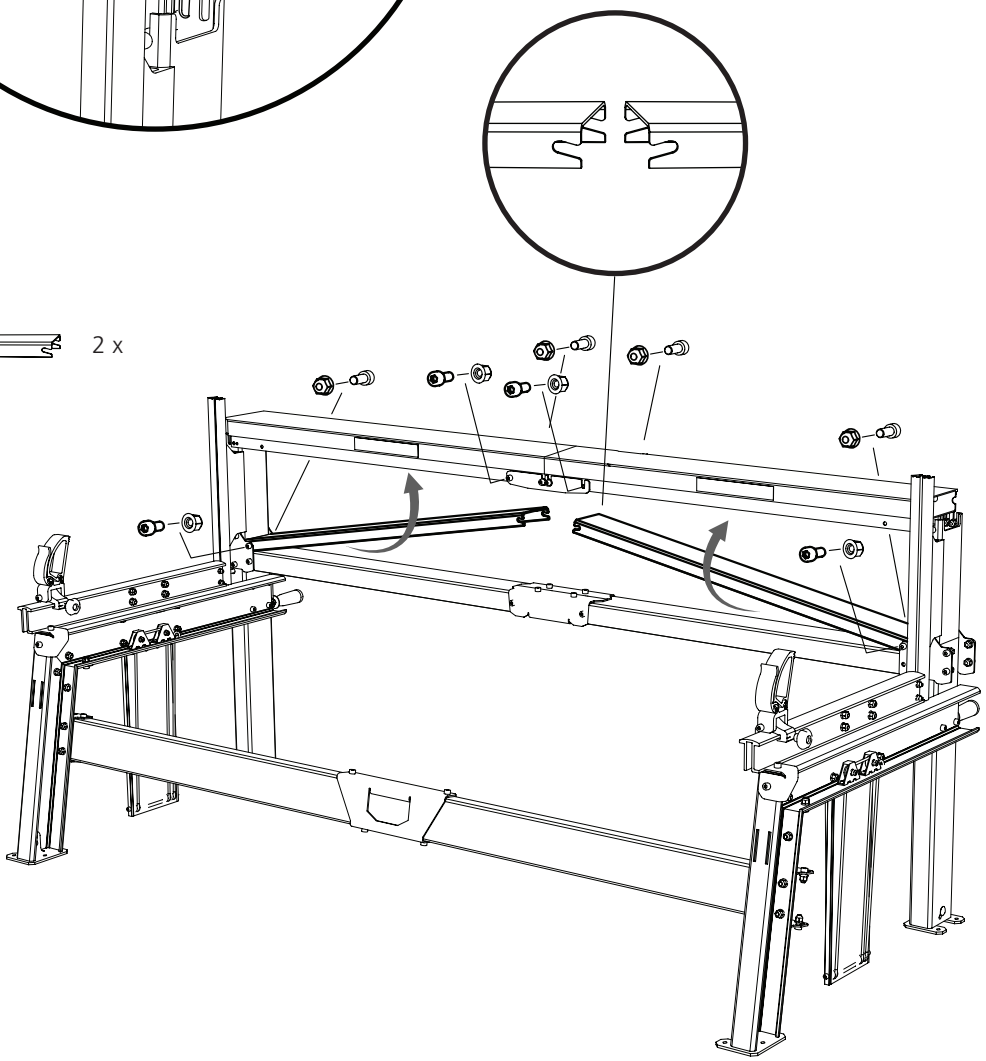

4525-010-2000

32

2 x

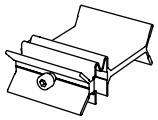
2 x

4 x M8x20

4 x M8

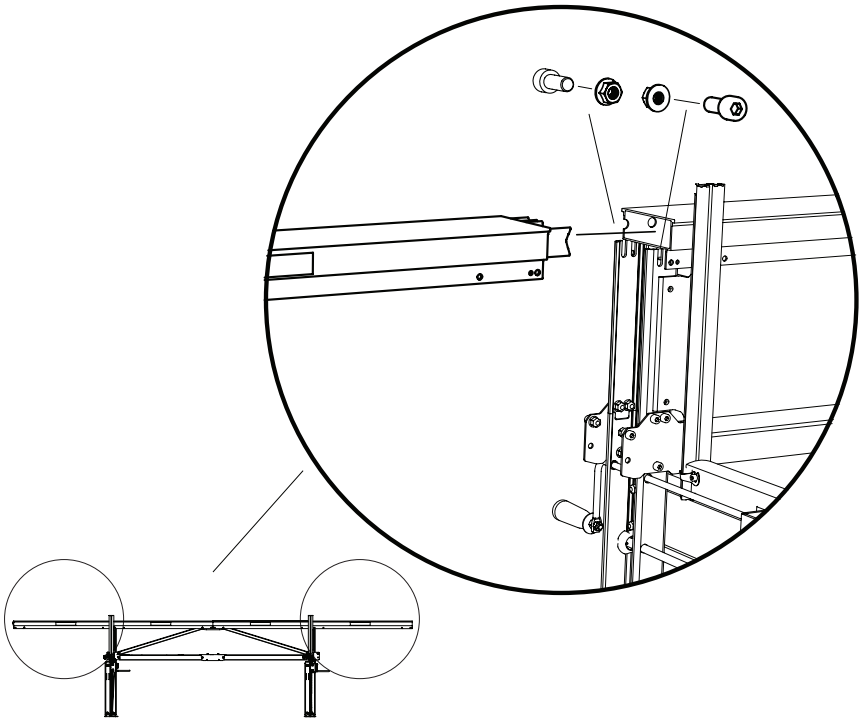

33

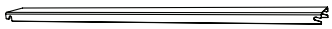
2 x

8 x M8x20

8 x M8

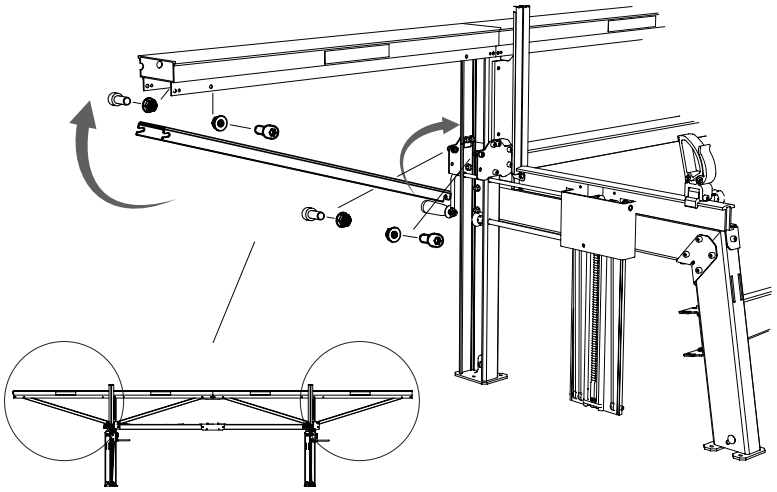

34

2 x

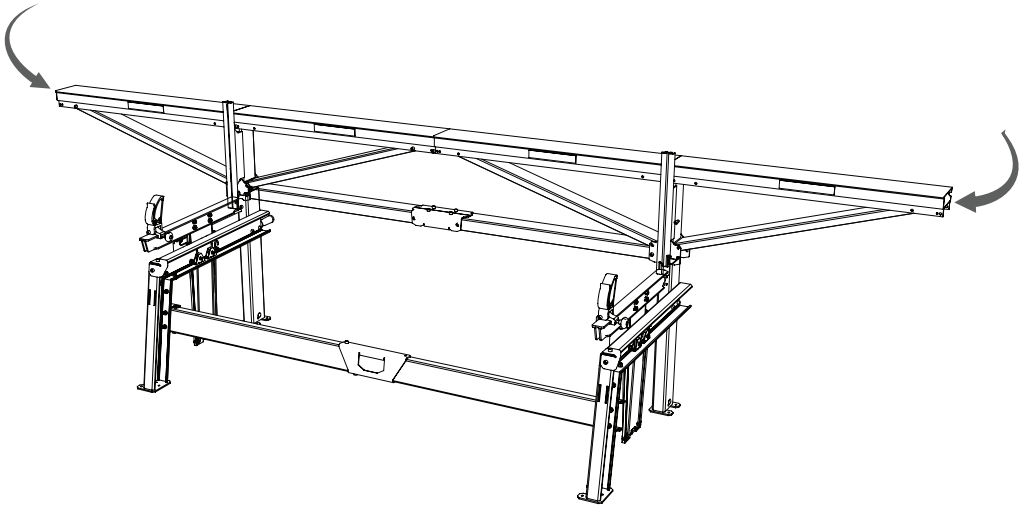

Good job!

Now it is time to assemble the saw carriage.

Open the saw carriage box.

Symbol: Assembly

4525-001-0010

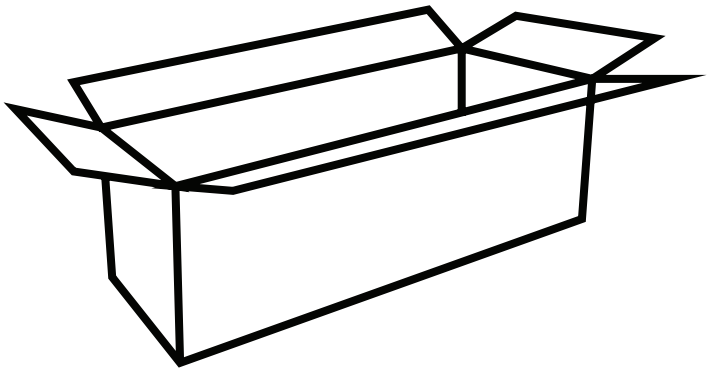

4525-001-0010

– 6 x —— M8x30

– 6 x —— M8

– 6 x —— M8

A.

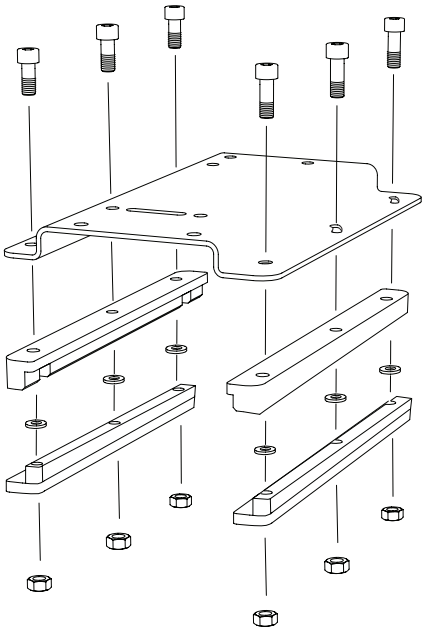

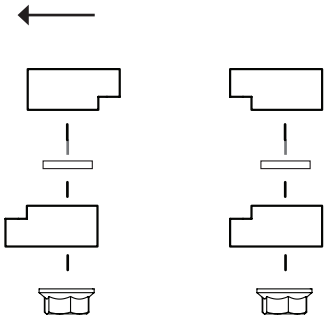

B.

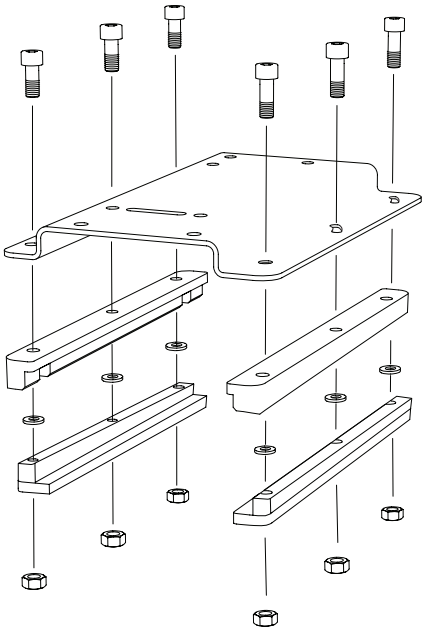

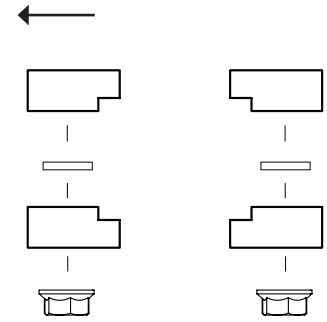

4525-001-0010

2

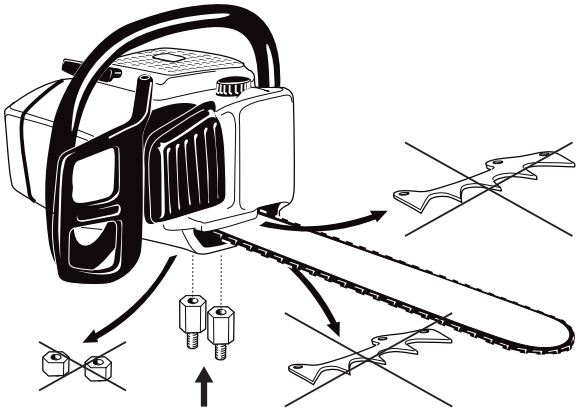

3

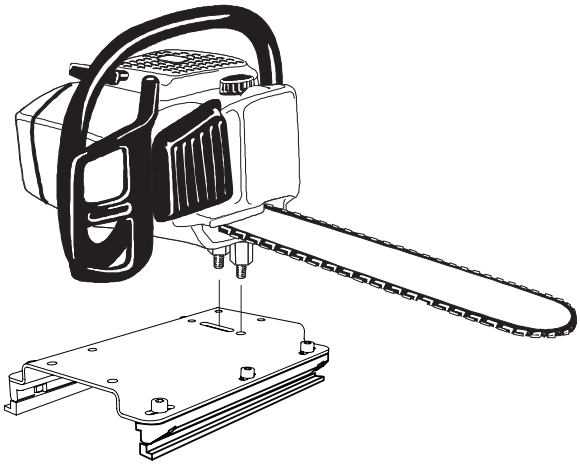

4

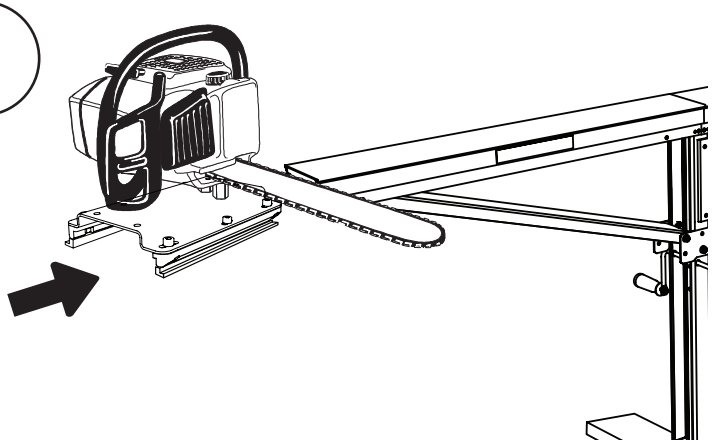

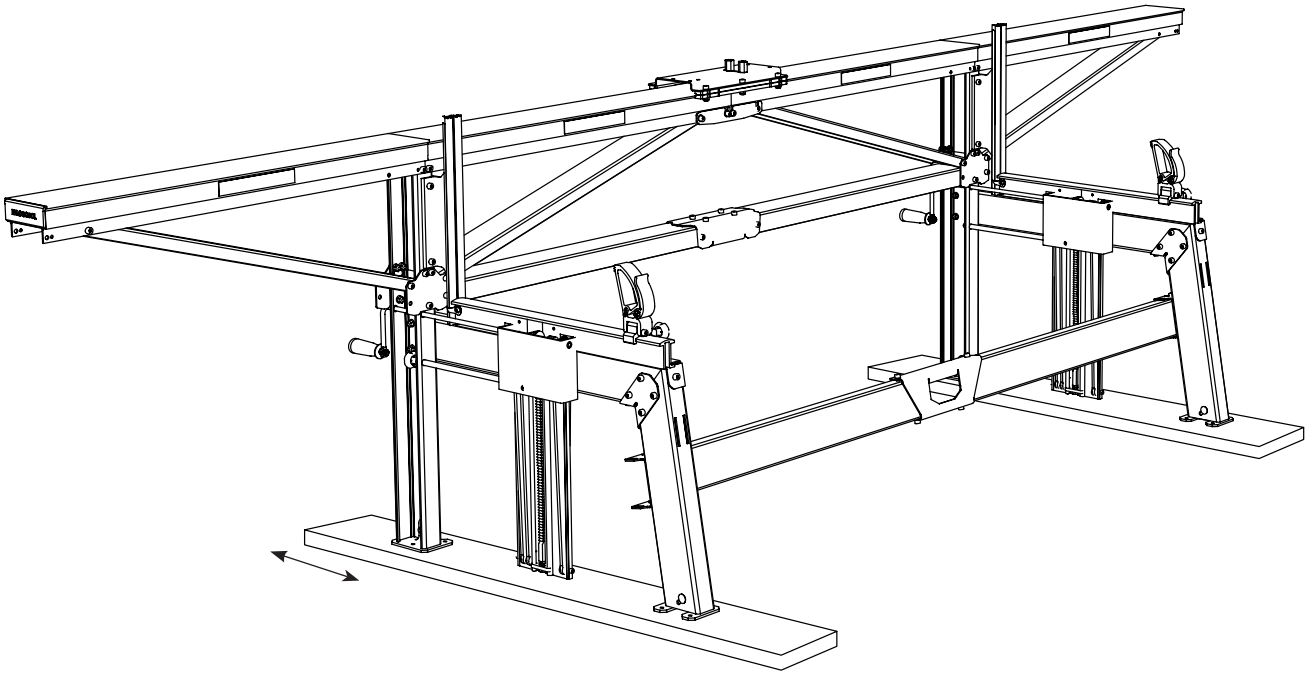

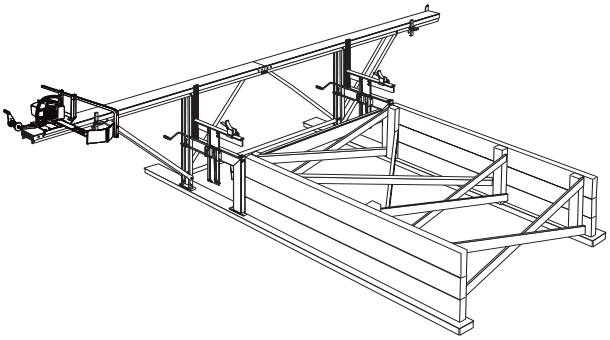

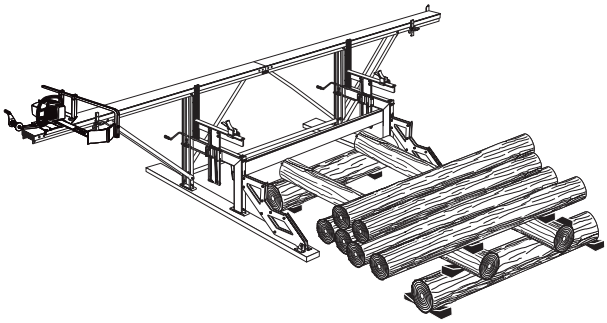

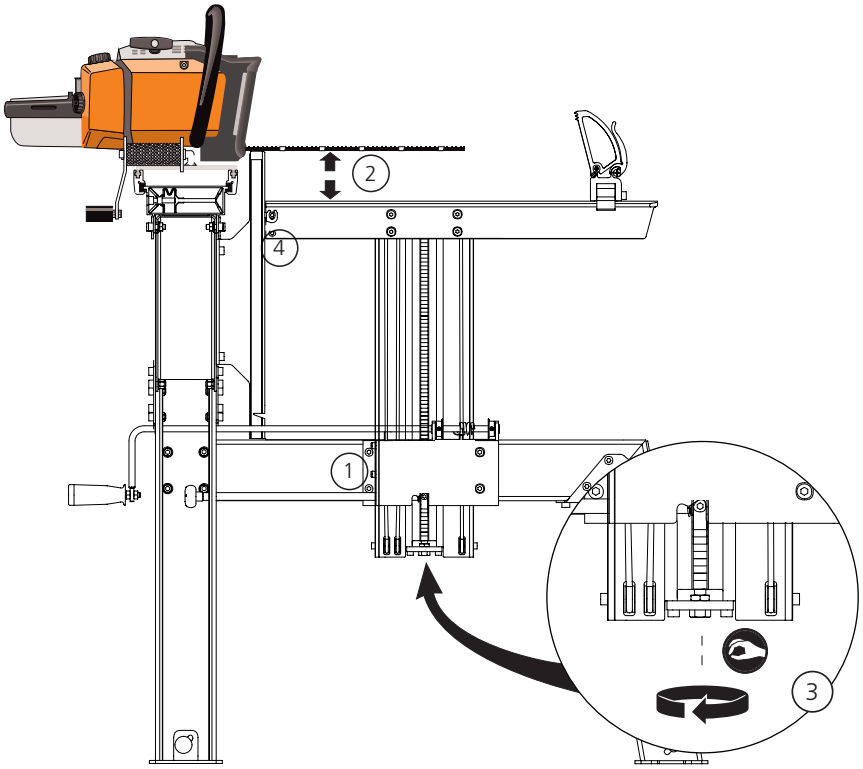

1

2

4

3

ADJUSTMENT: GUIDE RAIL

Check the straightness of the guide rail. Look along the guide rail from one of its top corners, and you can easily see if it is not straight. You can also stretch a string along the guide rail. Place a coin under the string on both ends of the guide rail, so you get a gap between the string and the guide rail.

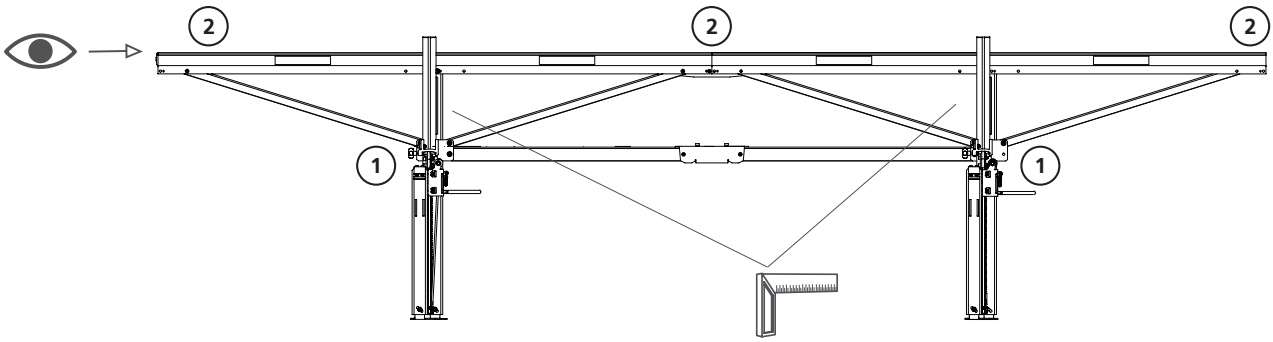

1 Tighten the lower bolt joints where the guide rail struts are fitted to the strut plates in the long legs.

2 Look along the guide rail and press it straight at the same time as you tighten the upper bolt joints.

ADJUSTMENT: GUIDE BAR

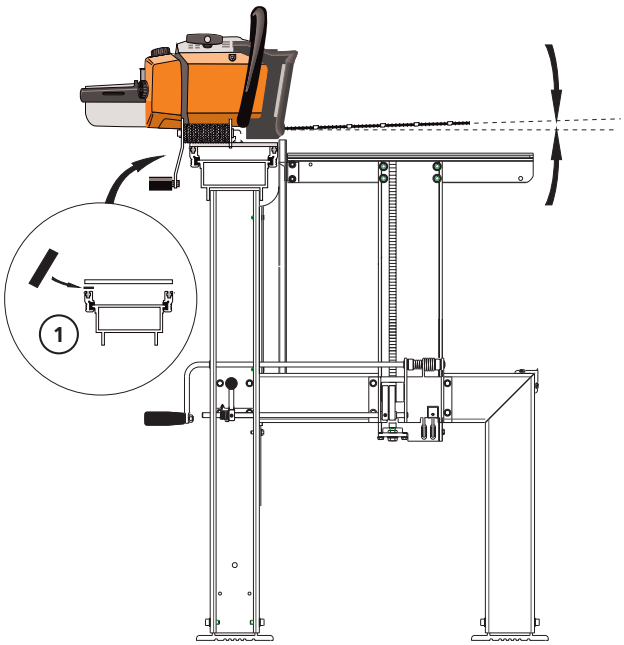

1 The straightness of the guide bar can vary between different chainsaws.

It should only be necessary to adjust a guide bar once, provided that it is not bent during sawing.

If you notice that you have to readjust the guide bar in the same direction when turning it over, it may be that the guide bar mount is not straight. This can be compensated for by placing one or more shims between the slide rails and the carriage bottom plate.

You can use thin pieces of aluminium plate from a soft drink can.

ADJUSTMENT: SAW CARRIAGE

Adjust the saw carriage for a perfect fit on the guide rail. Regularly lubricate the guide rail and slide rails with silicone spray.

1. Tighten the slide rails togehter to adjust the vertical play between the slide rails and the guide rail.

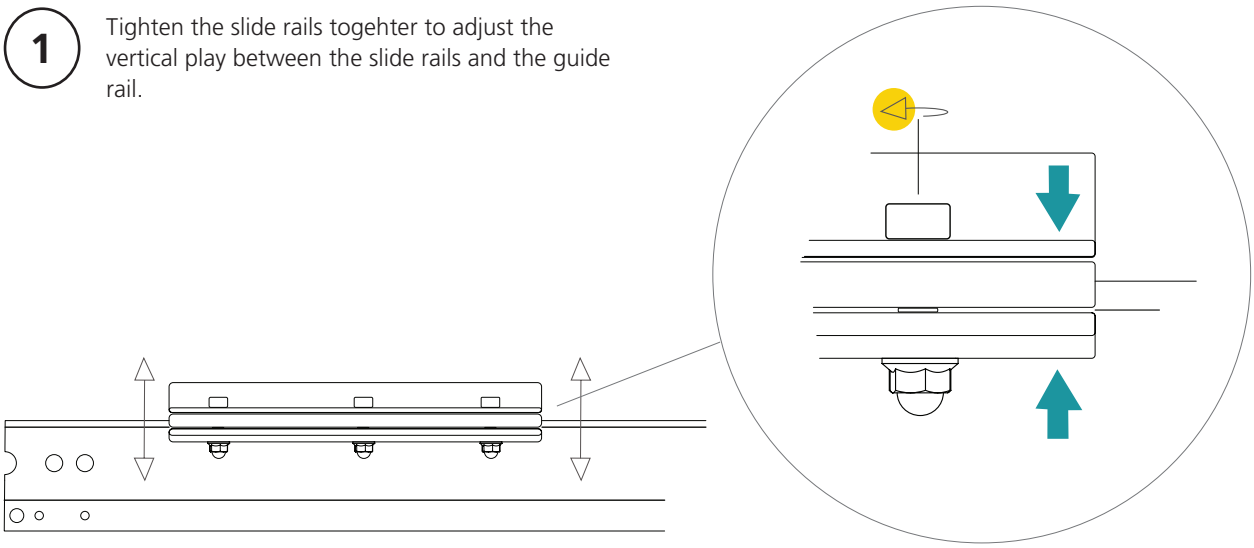

2. On the operator side, adjust the slide rails outwards or inwards, using the three fixed positions, to minimize the horizontal play between the slide rails and the guide rail.

There should be a slight play between the carriage and the guide rail in this direction.

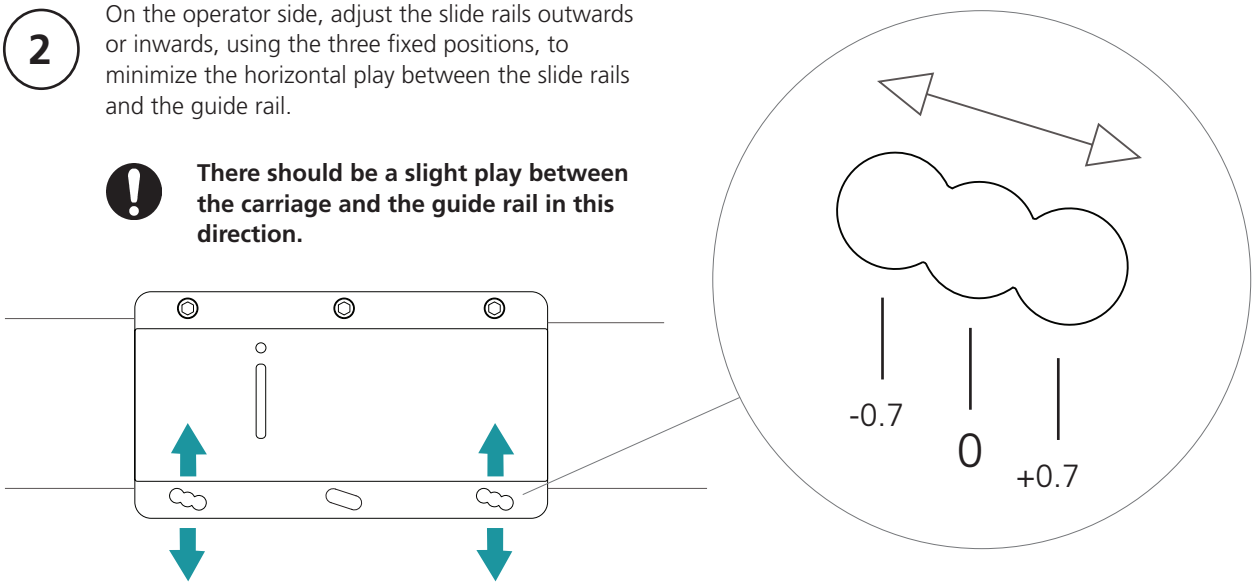

SAWING: STEP BY STEP

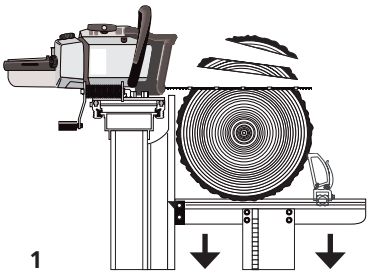

1

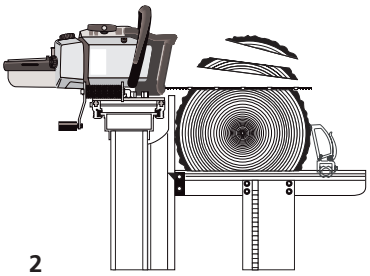

2

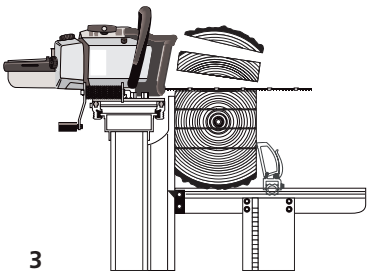

3

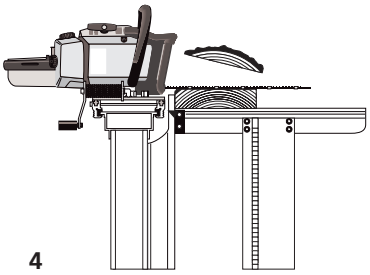

4

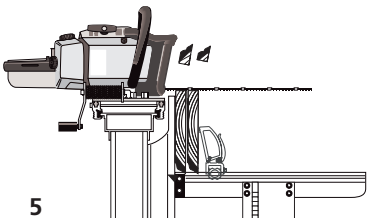

5

1.1 Make sure the log beds are resting on the legs, then roll the log onto the log beds.

1.2 Secure the log in place using the log clamps.

1.3 Engage the ratchet cam with the help of the ratchet bar.

1.4 Raise the log so that a suitable slab size will be cut off. Normally, the top end of the log is raised 1/4" or 1/2" (one or two clicks) above the root end so that the cut will be parallel to the grain.

1.5 Secure the log so that it can not rotate. This should be done prior to each cut.

1.6 Cut off the slab.

1.7 For larger logs you raise the log bed to cut another, waney-edged board (e.g. 2 1/4", nine clicks, for a 2" board).

2.1 Make the saw cut and then rotate the log 180 degrees.

2.2 For small logs, now set the cant height to 6", e.g. The log beds are at the same height. For larger logs, set to 7 1/4" or 8 1/4" e.g., if you want to cut a 1" or 2" board before cutting the height of the cant.

2.3 Cut off the slap and, in some cases, the waney-edged board.

3.1 Rotate the cant 90 degrees. Secure it. Set the height to a suitable slab size. Once more, the top end should be set slightly higher than the root end.

3.2 Raise both log beds equally much, while retaining the difference in height between them, and cut boards until approx. 4" (10 cm) remain of the cant. Always remeber to add 1/4" to the desired board thickness to compensate for the kerf.

4.1 Rotate the cant 180° and set both log beds to the same height. If the last boards to be cut are a 1" board and a 2" board, you set both log beds to 3 1/4" (2"+1/4"+1").

4.2 Cut off the last slab. Raise 1 1/4". Cut the 1" board.

4.3 What you have left now, is a 2" board.

5 Place the waney-edged boards on their edges. Secure the boards and then edge them.

As always, adjust the height of the log beds when you have a bark side resting on them, and set the log beds to the same height when you have turned the boards over and have the edged side facing downwards.

SAWING: TIPS AND ADVICE

At the start, it can be a good idea to draw lines on the log ends showing what you are planning to cut out from the log. Use a broad tip marker pen to make the line correspond with the kerf.

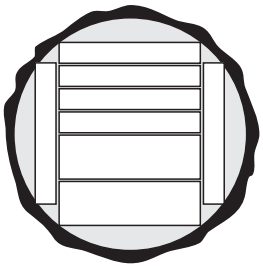

Keep in mind that:

- when an unsawn surface of the log faces down, the log bed where the top end of the log rests is to be set higher than the one on the root end side.
- The beds are set to the same height when a sawn surface faces down.
- Compensate for the kerf (1 click equals 1/4”) when the board is cut above the guide bar.
- Do not compensate for the kerf when the board is cut under the guide bar.
- The last board must not be thinner than 2”.
- Make sure that you do not cut into the log clamps.

Through-and-through sawing

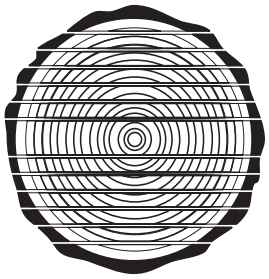

Sometimes, it can be better to slice up the log into waney-edged boards. This way you can get a little more out of every log. However, this method takes a bit more time. When cutting fine joinery timber, it can be a good idea to edge only one side before drying the timber. The last edging is not made until you know what the board is to be used for. This is to be able to make use of as much as possible of the timber.

When you are going to slice up a log, it is best if you first cut off a thin slab and then turn that side down to make the log rest on a flat surface on at least one of the log beds. This prevents the log from moving between the cuts and you will have nice and even boards.

Rotate the log when you have come close to the centre of the log. Calculate at what height you should start sawing.

Remember to compensate with 1/4” for every cut.

Quarter sawing

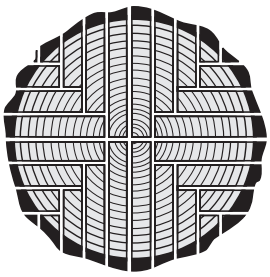

Quarter sawing provides you with the finest timber. You get optimum grain direction in every board, which is a big advantage when the wood is intended for cabinetmaking e.g. The downside is that it takes time, it is difficult, and you get several different board widths. Quarter sawing should not be applied when cutting small logs.

Start by cutting the log in half at its centre. Then you cut through the middle of the halves to get quarters.

When cutting the boards, you turn the cant after each cut. Sometimes, it can be easier to cut from below. This way the height of the log beds can be left unchanged.

Does this seem difficult?

We are many here at LOGOSOL that have long experience in sawing. If you, as a new sawmill owner, have any question, you are warmly welcome to call us. We are happy to provide you with useful tips and advice.

PRECISION

Precision of the sawmill components

The sawmill is constructed of extruded aluminium profiles. This material can, by nature, deviate somewhat when it comes to angles and flatness. When designing the sawmill, we have taken this into consideration, so possible deviations will not affect the functions of the sawmill.

One place where the slightest deviation is clearly noticeable, is the joint where the ends of the guide rail sections meet. It has been shown that it is very difficult to make such a wide crosscut at a precise angle. A saw blade is quite simply not more precise then +/- a couple of tenths of a degree, and this results in visible deviations. These deviations, however, are of no importance, provided that you do not press the gap closed. Press the guide rail sections together without using force. The joint coupler will adjust and secure the guide rail sections in relation to each other.

For the sawmill, we want to have as exact fit as possible of the plastic glides of the log lifters. Plastic is soft and difficult to process. This can result in the log lifters being somewhat difficult to move. If this is the case, use fine sandpaper and polish the plastic until the log lifters run easily. Usually, the plastic will have worn down after a couple of days use. (Before polishing, read the section on adjusting the log log lifters on page 39).

Demands for precision

We are convinced that a chain sawmill can provide as good results as, or better results than, other small-scale sawing methods. A large number of our customers have reported that they have never had better wood products than those they have sawn themselves. However, it is natural that we also meet customers who want to improve on the precision. Experience has shown us that variations in sawing results can have many explanations. The choice of raw material is vital. Cutting good boards from short, large-diameter logs is considerably easier than getting high precision results from long, thin ones. Tensions caused by storage or place of growth can cause problems. Some tree types cause more problems than others, etc.

The precision requirements also vary. A result that is satisfactory for someone sawing boards for rustic fence posts may not be good enough for someone sawing boards to be used in construction without being planed first.

If you have gone through the various steps for adjusting the sawmill, checked the cutting equipment and observed the effects of tensions in the wood, but still do not get the sawing results you expect, please contact us at Logosol.

CUTTING EQUIPMENT

Logosol's ripping chain allows quick length sawing with a thin kerf. But it is less durable than normal chains. If you keep the cutting equipment in good condition, you get the right timber dimensions, faster sawing and the cutting equipment will last longer.

Sharpen the chain before it gets dull

When the chain is beginning to get dull, you will notice that the cutting speed is decresing, the guide bar becomes hot and it becomes harder to feed the saw unit forward. Stop sawing immediately! Acctually, when this happens, it is already too late to sharpen the chain. Sawing with a dull chain exposes the cutting equipment to high levels of mechanical stress. Therefore, sharpen the chain before it becomes dull!

Avoid chain breaks

If you are sawing too long with a dull chain, it can break. The chain breaks under the cutting teeth, and you will see that it is worn there.

If, however, a drive link breaks, this can mean that the chain and the sprocket are not a good match. The best solution is to run 5 chains alternately on one chain drive. When the chains are worn out, then replace the entire set. A completely new chain on a worn sprocket can break in the first few minutes of use.

It is not recommended to run a normal 1.6 mm cross-cutting chain and 1.3 mm ripping chain on the same sprocket.

The guide bar can pull askew

If the chain has been damaged on one side or been filed unevenly, it can run incorrectly. The guide bar is pressed upwards or downwards and "springs back" when it comes out of the log. The chain will then wear more on one bar rail, and if you continue to saw the guide bar will wear unevenly. Even though you replace the chain, an unevenly worn bar can guide the chain incorrectly and, in addition, the new chain can also be worn down. An unevenly worn bar can be repaired. File the bar rails so they are equally high, e.g. with an edge file (SKU: 9999-000-0450) or Logosol's electric guide bar grinder (SKU: 7804-000-0005).

Another more common reason for the guide bar pulling askew, is that it is worn out so that the drive links touches the bottom in the track of the guide bar and the chain loses the support provided by the bar rails. This is shown on the chain by the tip of the drive link becoming worn.

The best chain oil

In order for the chain oil to work well it must be viscous and thready. When you place a drop between the thumb and the index finger and then open them, long threads should form. We recommend Logosol's sawmill chain oil, SKU numbers as given below:

1 litre, SKU: 0718-000-1001
10 litre, SKU: 0718-000-1010

Handbook for your cutting tools

Logosol has a separate document which we keep updated with respect to the technical specification of the latest new products. It is called 'The Handbook for Your Cutting Tools' and can be downloaded free of charge from our web site. You can also order a printed version.

TROUBLESHOOTING

Causes of incorrect measurements when sawing with the Logosol F2+

A. The sawmill is incorrectly adjusted or set-up.

B. The cutting equipment does not work as it should.

C. Tensions in the wood.

A. Checking the sawmill

1. Check that each of the four legs of the sawmill stands firmly and that the feet do not sink into the ground when the sawmill is loaded with a heavy log.

2. Check the levelness of the log beds to make sure that the sawmill is not skewed. Check both when the sawmills is loaded and unloaded.

3. Using a set square, check very carefully that the guide rail is at an exact 90° angle to the long legs. even a small deviation can lead to incorrect timber measurements.

4. Set the distance between the guide bar and the log beds so that it is exactly the same at both log beds. Make sure that the guide bar and the log beds are completely parallel.

5. Check that the guide rail is absolutely straight by sighting along it, or by running a line over the guide rail and using nails or the like as spacers between the line and the guide rail.

If support legs are used for the guide rail, it is essential that they stand on a rigid surface such as a pole driven into the ground.

Even factory-new guide bars can be out of true. This is detected if the parallel relation to the log bed changes when the guide bar is turned over. A bent guide bar is most easily straightened by being pressed up or down while the saw is mounted on the sawmill (page 40).

6. Check that the guide bar is straight in relation to the sawing direction by placing a straight 1.5 m long strip of wood on the guide bar (without the chain). Then sight across the wood strip. It must be parallel with the guide rail. If the wood strip is angled more than 5 mm forwards or backwards, it can have a negative effect on sawing. An out of true guide bar is corrected by placing washers between the carriage plate and the slide rail. Non-parallel guide bars most often occur when chainsaws other than Stihl are used.

7. The sawmill settings can be checked by placing a broad board of maximum length on the log beds and then edge it. First saw away a 1⁄4″ wood strip from one side of the board. Then turn the board, set both log beds to the same height and saw off a 1⁄4″ strip. Now measure the width of the board carefully. If the board is not the same width along its entire length, it means that the log beds are incorrectly set or that the guide rail is crooked.

B. Checking the cutting equipment

The guide bar must not cut upwards or downwards during sawing. If the cutting equipment is faulty, it is most noticeable when the guide bar leaves the log. If the guide bar does not 'float' out of the log but springs up or down, problems can arise. This can be an indication that there is something wrong with the guide bar or the chain.

Reasons for malfunction in the cutting equipment:

1. A common cause of sawing problems is that blunt chains are used.

2. The chain may be damaged on one side, for instance by metal objects in the log. The chain may still cut, but pulls up or down.

3. The chain may have been filed incorrectly. The teeth on one side may have been filed less than the ones on the other side. To get a more even result, try to maintain the same working position when filing the left and the right sides of the chain. A few teeth that are damaged or that are missing, e.g. by sawing through nails, usually have very small effect on the function of the chain.

4. When precision diminishes after a period of problem-free sawing, it is almost always due to wear on the guide bar.

5. If you get a ridged surface, consult The Handbook for Your Cutting Tools. It can be downloaded free of charge from our web site.

When the guide bar is not fitted straight

On some chainsaws the bar fitting is not level, making the bar tilt sideways. Clean the bar fitting. Place a straight and approx. 1 m long board across the guide bar (without the chain) and check against the guide rail. If the guide bar is tilted sideways, place shims between the carriage plate and the slide rails until the board above the guide bar is parallel to the guide rail. Tensions in the wood can sometimes result in similar symptoms as faults in the cutting equipment.

C. Tensions in the timber

The sawmill can only saw straight. If the wood twists during sawing, then precision will be lost. Tension can cause large variations in measurement. Hardwood often has higher tensions than softwood. But tensions in

softwood can also be problematic. Trees that have grown on steep inclines, for instance, can have high tensions. In such cases, a whole group of logs can be difficult to saw.

Tensions can also arise in storage. If the bark and top segment begin to dry, the whole surface will begin to shrink. In such a case, the log may bend slightly, when one side is sawn.

It is easy to discover tension in the wood that leads to measurement errors. Each time you pull the saw back, you can read what is happening in the log. As long as the guide bar continues to lie just above the newly sawn surface, the log has not bent. However, when there is space between the guide bar and the sawn surface, or if the guide bar is pressed upwards when the saw unit is pulled back, it is time to plan how the next cut should be made to reduce the effects of tensions.

When sawing from the top towards the bottom of the cant, the cant has a tendency to bend downwards at its ends. This is especially true if there is large root-end growth pulling the root end down. Due to this, it is uasaully best to turn the log over after passing through the centre, and saw the rest of the material from the other side.

If you still want to saw logs with high tensions, it can be a better alternative to use a chainsaw and a Timberjig (SKU: 4900-000-1000) to slice up the log. The Timberjig follows the previously sawn surface and therefore gives better precision if the log bends.

Some tips for avoiding the effects of wood tensions

1. Cut wood with tensions in as short lengths as possible. By reducing the log length to app. 2.5 m,
the precision will be high even if there are high tensions in the wood.

2. Work around the log, sawing all sides in order.

3. To get perfect measurements on the last board, you can use a newly sawn cant as underlay when making the last cut. Another way is to use special accessories for the sawmill to support the ends of the cant. If many logs that are over 3.5 m long are to be sawn, it is best to extend the sawmill by 1 or
2 m and add one extra log lifter/log bed.

MATERIAL DRYING

Once the wood is sawn it must be dried. If this is not done in the right way, then there is a danger it will be damaged by fungal rot.

The best time for outdoor drying is in the spring. The relative humidity of the air is very low and the wood will dry in a couple of weeks.

Cut some supportive blocks in the length that corresponds to the width of your pile, ideally larger pieces, e.g. 5”5, to raise the wood from the ground, which should also be dry, level and free of growth. The spacing should not exceed 1 m and should lie level and in line with each other.

Cut spacers or drying sticks in the same length as the supportive blocks.They should be of the same thickness (1x1” or 1x2”) and dry. (You can get material for these by making an extra cut when edging your boards.)

Place the first row of boards on the underlying surface. The boards are to be of the same thickness and be positioned a few centimetres apart. Then place spacers on the boards (in the same positions as the underlying supportive blocks) before the next layer is laid. It is important to place the spacers exactly over each other, to keep the boards from warping or bending.

The higher you pile the boards, the better pressure there is on the lower boards. Place roofing of plastic, metal sheeting or masonite over the top to provide protection from rain, but leave the sides open. Put a weight of some sort on the roof to put pressure on the top boards.

If the wood is to be used for fine joinery, it should be stored in a heated room for another 3-4 weeks (longer for thicker dimensions) or be dried in a wood drying kiln for a perfect result.

It is possible to use undried wood in some constructions, but it must be kept in mind that the width and height will shrink 5%. Wood also shrinks around 0.3% in length, but this can usually be disregarded. In order to avoid rot, you should not enclose undried wood in a way that makes it hard for air to circulate. One further tip: Do not drive two nails next to each other as the board will probably crack in the middle when it dries out. Drive one nail and wait with the second until the wood has dried.

One example of where you should use undried wood is when building log structures. In such a situation, a heavy wall is a plus, as is the possibility that the logs still can be shaped when they are pressed against each other.

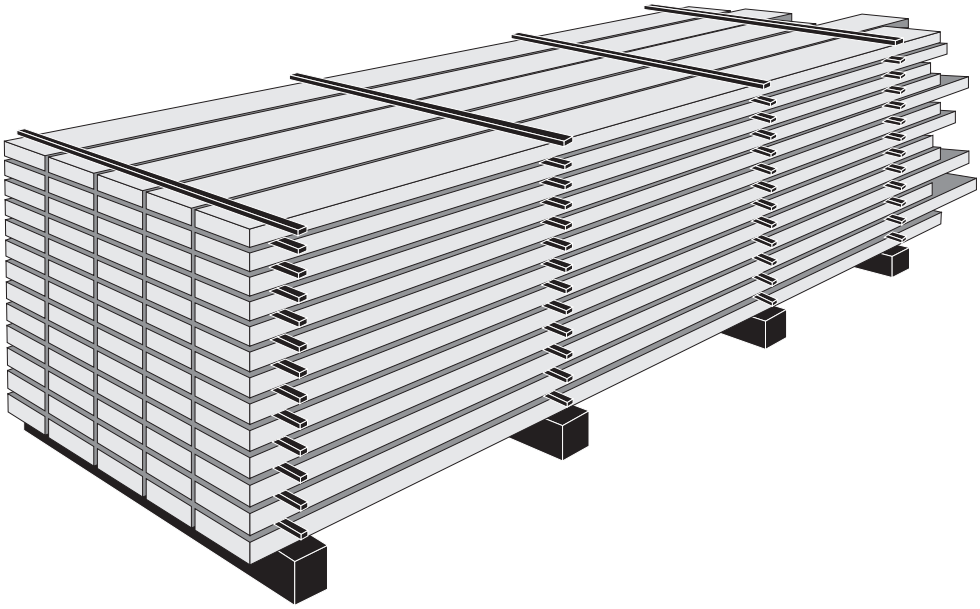

LOGOSOL also has electric wood drying kilns for preparation of fine joinery timber.

ACCESSORIES

For the Logosol F2+ there are a number of accessories that will facilitate working with the sawmill. Visit our website for up-to-date accessories and prices.

Extensions

The Logosol F2+ is built of 1-metre sections. It is easy to extend to any length with the help of guide rail sections and log lifters as needed.

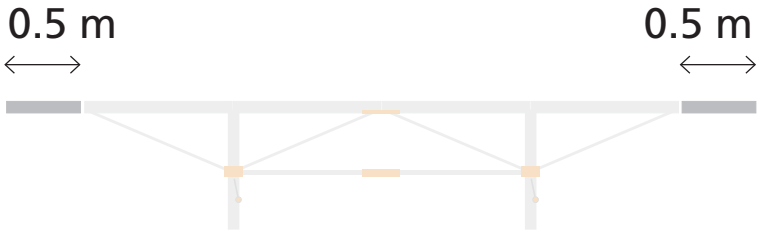

2 x 0.5 m extension

Two 0.5 m guide rail sections give a sawing length of 5 m.

4525-555-0001

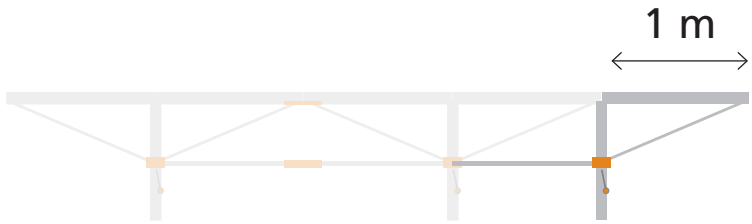

1 m extension

A 1 m guide rail extension with one extra log lifter gives a sawing length of 5 m.

4530-555-0002

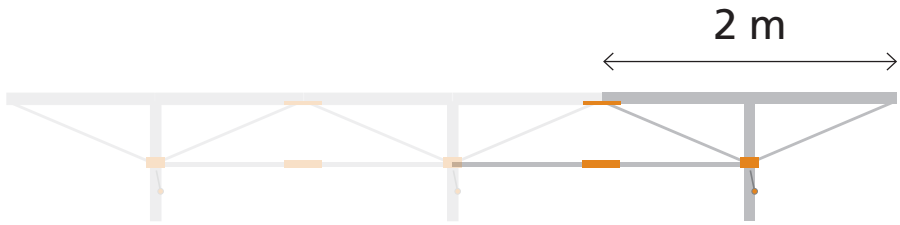

2 m extension

A 2 m extension with one extra log lifter gives a sawing of 6 m.

4530-555-0003

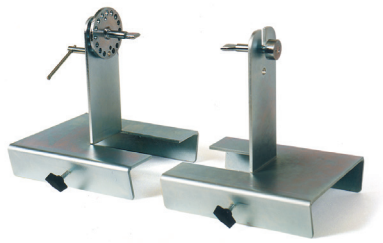

Round sawing attachments

A really cool accessory! Cut your own posts with up to 16 sides. Both straight and tapered.

9999-000-1100

EU declaration of conformity

In accordance with Directive 2006/42/EG, Annex 2A

Logosol AB
Fiskaregatan 2
871 33 Härnösand
SWEDEN

hereby declares that: **Logosol F2+**

is manufactured in accordance with the following EU directives:
Machinery Directive 2006/42/EG
EMC Directive 2004/108/EU

and has been manufactured in conformity with the following harmonized standards:
EN ISO 12100:2010
EN 60204-1:2006
EN 50370-1, -2.

Notified body, 0404,RISE SMP Swedish Machinery Testing Institute AB, Box 7035, 750 07 Uppsala, Sweden, has executed EC type-examination according to Directive 2006/42/EG, article 12, paragraph 3b. The EC type examination certificate has the number: 0404/17/2408

The delivered chain sawmill corresponds to the machine that was subject to EC type-examination.

Fredrik Forssberg, CEO, is responsible for the technical files.

Härnösand 2022-04-25
Fredrik Forssberg, CEO

Declaration of conformity

Logosol AB
Fiskaregatan 2
871 33 Härnösand
SWEDEN

hereby declares that **Logosol F2+**

is manufactured in accordance with:
Supply of Machinery (Safety) Regulations 2008

and has been manufactured in conformity with the following harmonized standards:
BS EN ISO 12100:2010

Fredrik Forssberg, CEO, is responsible for the technical files.

Härnösand 2022-12-16

Fredrik Forssberg, CEO

LOGOSOL

Fiskaregatan 2, 871 33 Härnösand, Sweden
+46 611 182 85 | info@logosol.com | www.logosol.com