LOGOSOL

USER MANUAL

Ref. no. 0458-395-0511

REV: 1

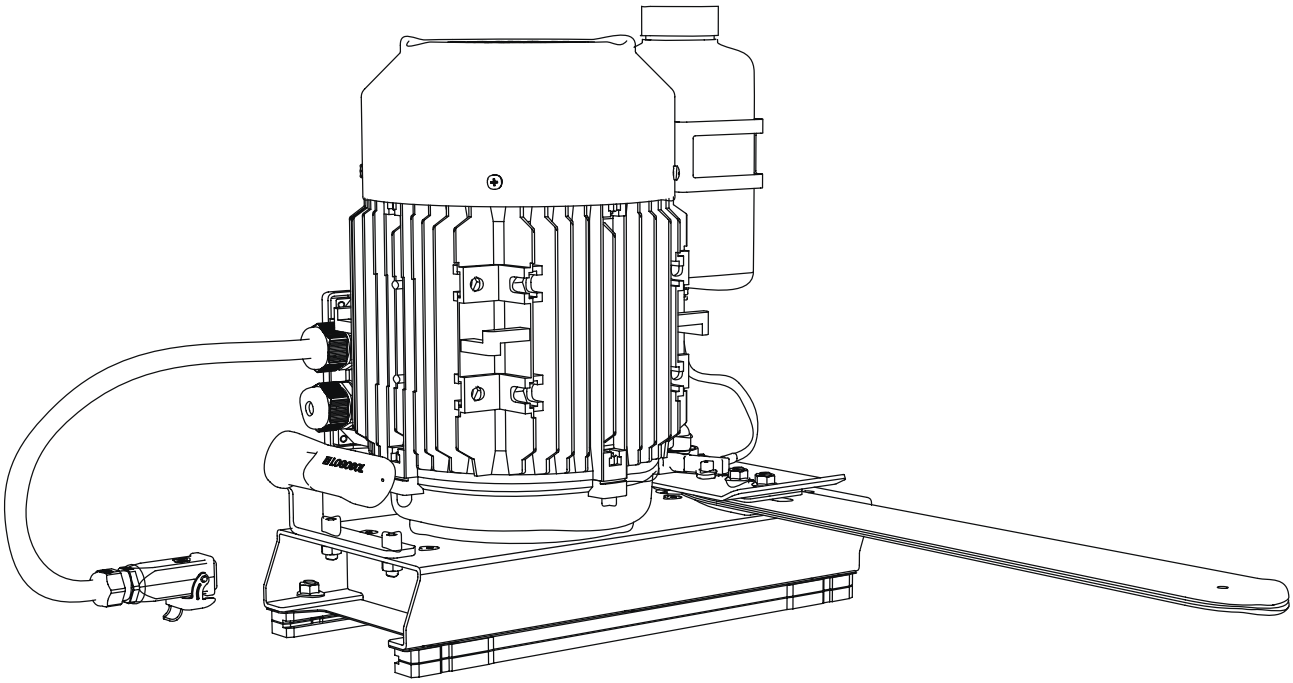

LOGOSOL ES5/ES8

ELECTRIC CHAINSAW

EN

THANK YOU FOR CHOOSING A LOGOSOL MACHINE!

We are very pleased that you have demonstrated your confidence in us by purchasing this saw unit, and we will do our utmost to meet your expectations.

Logosol has been manufacturing sawmills since 1989. In that time we have supplied approximately 50,000 machines to satisfied customers the world over.

We care about your safety as well as we want you to achieve the best possible results with your sawmill. We therefore recommend that you take the time to carefully read this user manual from cover to cover in peace and quiet before you begin using the saw. Remember that the machine itself is just part of the value of the product. Much of the value is also to be found in the expertise we pass on to you in the user manuals. It would be a pity if that were not utilised.

We hope you get a lot of satisfaction from the use of your new machine.

Bengt-Olov Byström
Founder and chairman,
Logosol in Härnösand, Sweden

Read through the user manual carefully and make sure you understand its contents before you use the machine.

This user manual contains important safety instructions.

WARNING! Incorrect use can result in serious or fatal injuries to the operator or others.

LOGOSOL continuously develops its products.
For this reason, we must reserve the right to modify
the configuration and design of our products..
Document: Logosol ES5/ES8 User Manual
Manual, ref. no.: 0458-395-0181
Text:Mattias Byström, Robert Berglund
Illustrations: Martin Söderberg
Last revised: May 2021
© 2021 LOGOSOL, Härnösand Sweden

TABLE OF CONTENTS

Safety instructions	4
Machine description	6
Components of the electric chainsaw	7
Technical data	8
Component parts: on delivery	9
Assembly	11
Features	12
Electrical system	14
Troubleshooting	15
Cutting equipment	18
Sawing: tips and advice	19
Precision	20
Drying the wood	21
Declaration of conformity	24

SAFETY INSTRUCTIONS

- Read the entire manual carefully before the electric chainsaw is put into operation. Failure to comply with safety regulations may result in danger to life.
- Make sure that everyone working with the electric chainsaw is well acquainted with the risks and has read the manual. The manual should always be available to all those working with the electric chainsaw. This applies also if the sawmill is lent or sold.
- Read the manual and safety instructions for the sawmill.
- Minors under the age of 18 are not allowed to use the electric chainsaw.
- Children and animals must not be near the sawmill during operation.
- Respect the safety distance due to loud noise and the risk of the chain being thrown out in the direction the bar is pointing in the event of a chain break.
- Anyone working with the electric chainsaw should be in good physical shape, healthy and well-rested. Have regular work breaks. Do not work under the influence of alcohol, drugs or medicines that may cause drowsiness or inattentiveness.
- Work with the electric chainsaw should always be carried out under good visibility. Do not work in the dark and neither with reduced vision.
- Make sure there are other people within earshot in case you need help.
- Use only LOGOSOL manufactured products or those expressly approved for the purpose when adding extra equipment . Other equipment may result in risk of accident and must not be used. LOGOSOL disclaims any liability for personal or property damage incurred during the operation of the sawmill with an unauthorised addition.
- If a saw unit heavier than 15 kg is used, support legs must be fitted under the ends of the guide rails. Tipping hazard!
- Always wear personal protective equipment: Appropriate clothing is a tight-fitting work overall. Never work with loose clothing, jacket or similar.
- Wear steel cap shoes and deep tread sole for good grip. Do not wear a scarf, tie, jewellery or the like that can catch in the equipment.
- Never reach over or under the guide rail during operation. Rotating cutting equipment. Risk of cuts!
- Wear heavy duty protective gloves. Risk of cuts when handling the bar and saw chain. The cutting equipment can also be hot immediately after sawing.

Key to symbols

For your own safety, read through the entire user manual carefully and do not start the machine before you have understood everything.

Use approved ear protectors and protective eyewear. Hearing can be damaged even after short periods of exposure.

Sharp rotating tools. Make sure that your fingers never come near the cutting tools.

This symbol means ‘WARNING’. Pay particular attention where this symbol appears in the manual text.

This symbol is followed by instructions that must be observed. Pay particular attention where this symbol appears in the manual text.

SAFETY INSTRUCTIONS

Safety distances

Respect the safety distances. The safety distance is 8 m for the operator and 15 m for persons other than the operator. The illustration below shows the sawmill from above. The operator is to remain within the area marked with a dashed line (- - - -) when the saw is in operation. The operator is not to stretch over the guide rail when the sawmill is in operation.

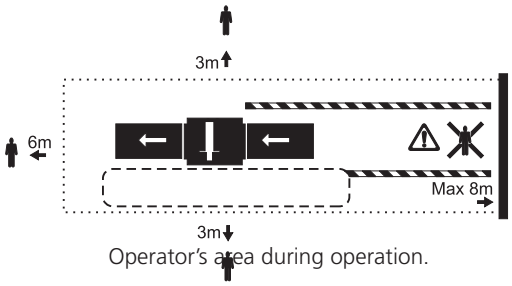

Operator's area during operation.

Increased throw-out risk! Never use a chain sharpened for rip sawing when cross cutting.

Before each work period

- Check the lifting line's condition in particular. Change immediately if any sign of wear is detected. Check that bolted joints and locks in the log bed lift and lock system are fully tightened and that all the moving parts of the sawmill move freely and smoothly.
- Check that the sawmill is completely level and that it is securely fixed to the underlying surface.
- Check that the cutting equipment is correctly assembled. Risk of chain breaks!
- Check that saw unit is pushed fully into position on the guide rail. Throw-out risk on start up!

During operation

The sawmill is not to be in any other position than level when in operation. Risk of overturning! The sawmill should be fastened directly to the underlying surface or to a bedding of planks (see manual) which increases the area of the load-bearing surface.

- Hold the crank firmly whenever raising or lowering a log. If released, the crank may spin back and hit your hand hard.

Do not place your hand on the inside of the long leg when raising or lowering the log. There is a risk that your hand can be trapped if the lifting line snaps or the crank spins.

- Do not saw short logs that extend less than 0.2 m beyond each log bed. A shorter log can fall off when the log beds are raised!
- The maximum permitted load for the sawmill is 1200 kg.

Always stand to the right of the saw unit when it is in operation. A chain that breaks can be thrown out through the sawdust outlet.

- Keep the worksite free of tools, pieces of wood, sawdust and other items you can trip on.

Turn the saw unit off after each cut. Never leave the electric saw unattended such that unauthorized persons can start it.

If any kind of malfunction occurs, stop sawing immediately and turn off the saw unit until the problem has been resolved. Always keep this in mind. Most accidents with dangerous machines, both the electric saw and other machines, happen when something goes wrong and the operator attempts to fix it while the machine is still running. A stop seldom shows up on the finished product.

MACHINE DESCRIPTION

- The Logosol Electric Chainsaw is a chain saw intended for use on Logosol's sawmills Solosågen, Farmer's Sawmill and F2 and F2+.
- The sliding elements that fit on the sawmill beam are integrated in the construction. The saw is powered by an electric motor that transmits the power to the chain via a belt transmission.
- The electric chainsaw is equipped with a mechanical pump, which supplies the bar with chainsaw oil.
- The low friction plastic sliders last for several years thanks to the smooth surface of the aluminium components.

Maintenance

Check the operation of the machine according to the following instructions to ensure good function:

Check the following before each job:

- Check the condition of the bar and saw chain.
- Check level of the chainsaw oil.
- Clean the saw from sawdust.

Every 10 hours of operation:

- Check sliding strips/guides for wear.
- Check the plastic gear in the oil pump.
- Clean the oil system (from bottle to bar) with e.g. compressed air.

Every 20 hours of operation:

- Check the condition of the belt transmission.

1	Base asembly
2	Motor asembly
3	Motor plate
4	Oil pump axle asembly
5	Chain guard asembly
7	Belt pulley
8	Stop screw SK6SS M8x10
9	Belt pulley
10	Poly V belt
11	Tapered hex socket screw M6x16
12	Flange Nut M6MF M8
13	Hex socket screw M8x55
14	Hex socket screw MC6S M8x20
15	Bottom plate
16	Slide strips (saw carriage)
17	Spring washer Din137Bd 15x8
18	Hex socket screw Mk6S M8x35

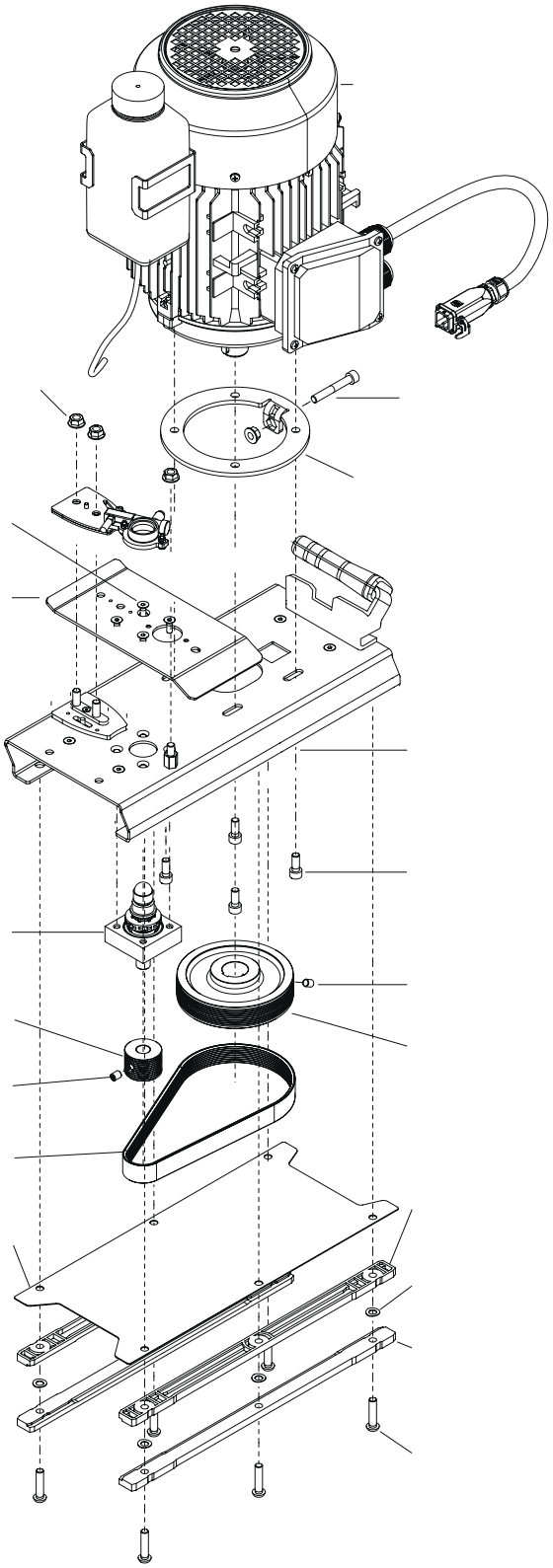

TECHNICAL DATA

POWER	
Rated power ELECTRIC CHAINSAW	4.6 kW
Rated power ELECTRIC CHAINSAW	8 kW
TRANSMISSION	
Multi-V belt (10 PJ 610)	Max. belt tension: 290 N, Percent elongation: 0.29
Chain speed	18.5 m/s
NOISE LEVELS	
Sound pressure, unloaded	97.0 dB(A)
Sound pressures, loaded	102.0 dB(A)
Sound power level	113.0 dB(A)
DIMENSIONS	
Height	410 mm
Length	425 mm
Width	410 mm
Weight	38/42 kg
ELECTRICAL SYSTEM	
Power supply	50 Hz 400 V 16 A
Enclosure rating	IP 54
Electrical connection	CEE system (round plug) 16A, with inverter

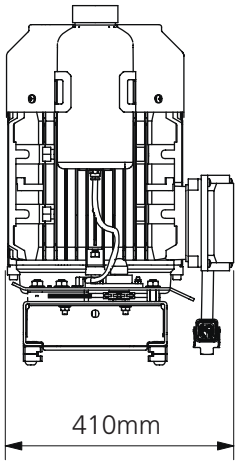

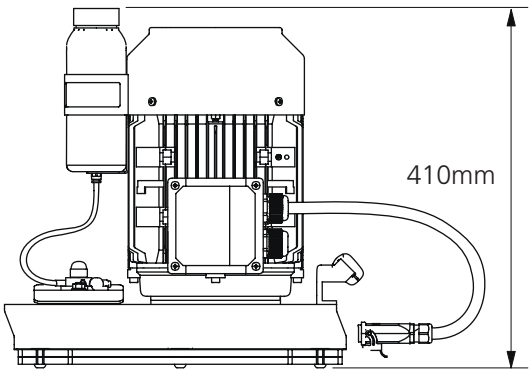

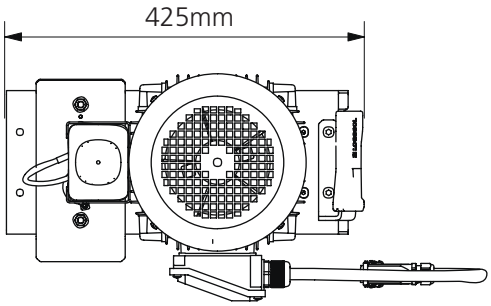

BOLTS & NUTS

Definition of fasteners.

Shoulder bolt

Phillips bolt

Slotted bolt

Set screw

Hex nut

Flange nut

Flat washer

Allen bolt

Partial thread Allen bolt

Hex bolt

Partial thread hex bolt

Flange bolt

Partial thread flange bolt

Carriage bolt

ADDITIONAL SYMBOLS

The following symbols are used as supplements to the symbols above to describe the design or function of the fasteners.

Low Tensilock Lock Countersunk

DIAMETER & LENGTH

The size of a fastener is written as a diameter measurement **(M)** ISO 68-1. For bolts, this is followed by a length measurement. The length of the bolt is measured from below the head to the tip of the bolt.

(Diameter)		**(Length)**
M8	x	20

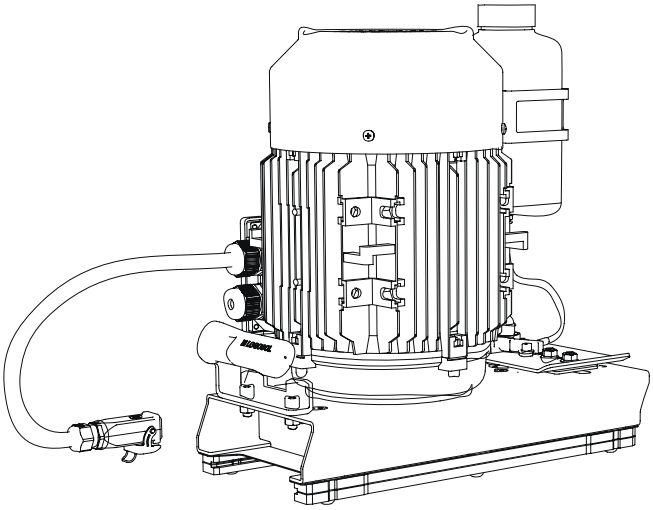

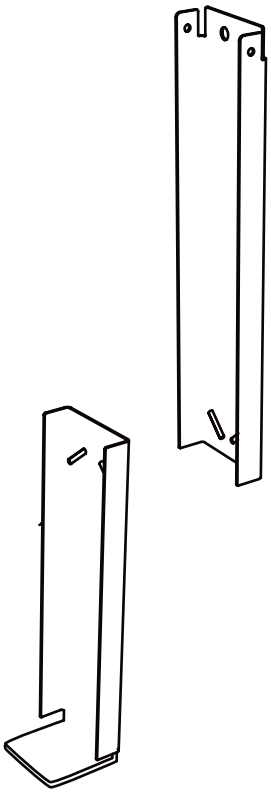

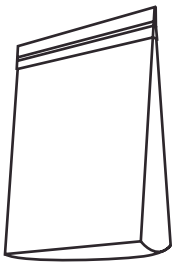

1

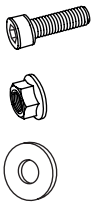

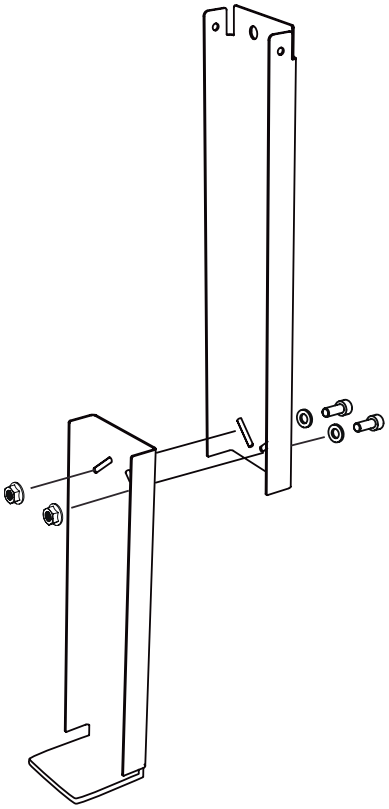

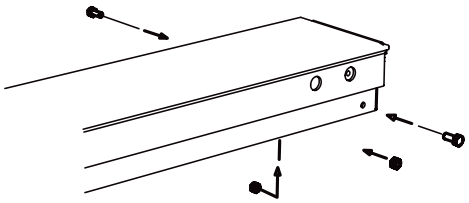

2

ATTACH THE SUPPORT LEG

Fit the support leg to the operator side of the guide rail.

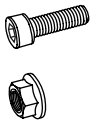

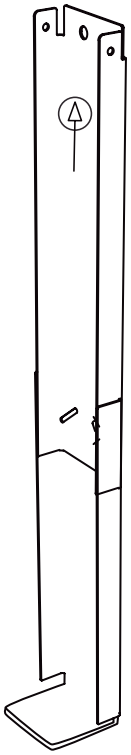

FEATURES

BELT TENSION

Normally, a multi-V belt lasts for many years of use but after a time of service, it may need to be tightened so as not to slip when sawing. In order for the belt to last as long as possible, it should be tightened so tight that it just grips but no more.

Do as follows: Tilt the saw and loosen the motor securing screws, release as little as possible to free the motor. Then adjust the belt tension using the adjusting screw on the end of the machine. Tighten the motor securing screws thoroughly after completing the adjustment.

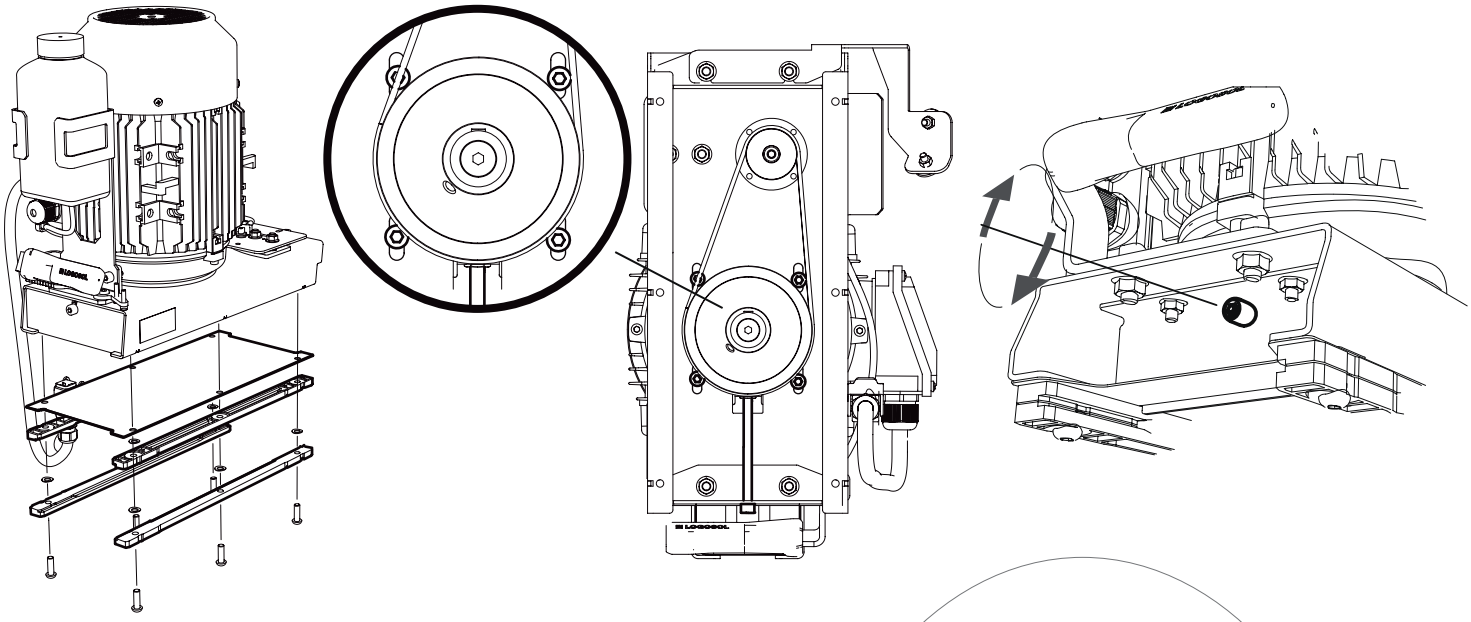

ADJUST THE SLIDE STRIPS

Adjust the saw carriage for perfect fit on the guide rail. Lubricate the guide rail and slide strips regularly with silicone spray. Press together the slide strips to adjust the vertical play between them and the guide rail.

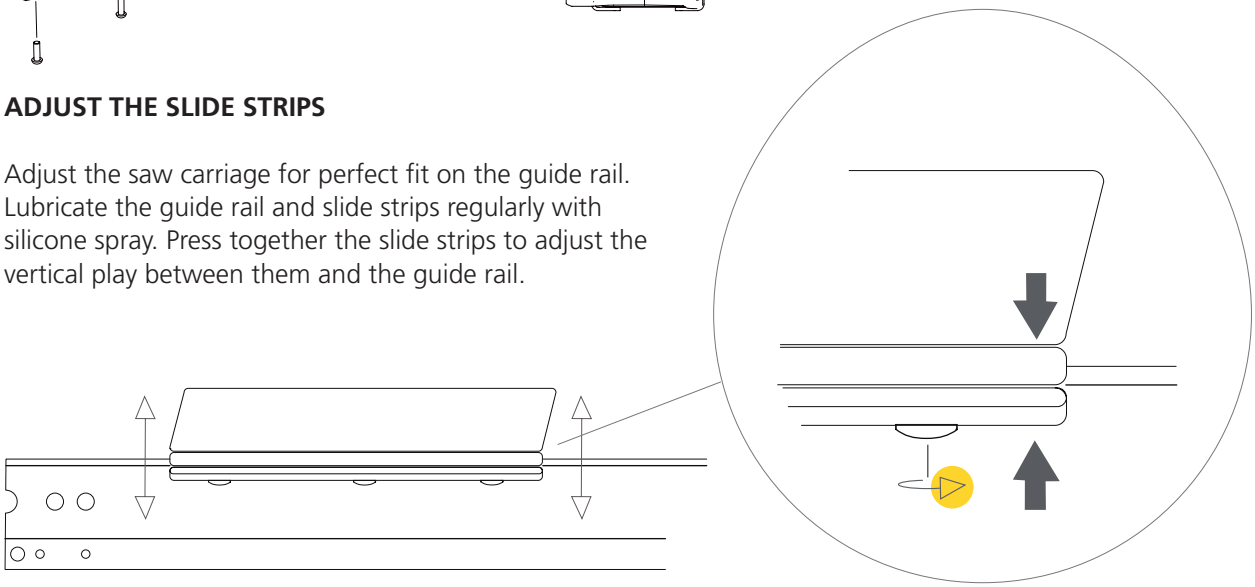

ADJUSTING THE SLIDE STRIPS FOR OLDER LOGOSOL CHAIN SAWMILLS (M1-M8,F1)

If you have an older Logosol chain sawmill (M1-M8 and F1) you may need to adjust the slide strips so the saw can pass the log supports.

Do as follows: Slightly loosen the six bolts that hold the slide strips. Push the orange chassis back until it is aligned with the front slide strips. Tighten the bolts again.

MOUNT THE GUIDE BAR

Make sure the power supply is cut. Loosen the nuts holding the bar and lift off the guide bar plate. Place the bar and chain in place and replace the cover plate. Check that the guide bar is resting against the spacers and that it is not jammed up with wood chips or by the chain tensioner. Also check that the chain is turned the right way round and that it lies firmly against the whole sprocket.

Pull the chain around by hand before starting the machine to make sure it is correctly installed.

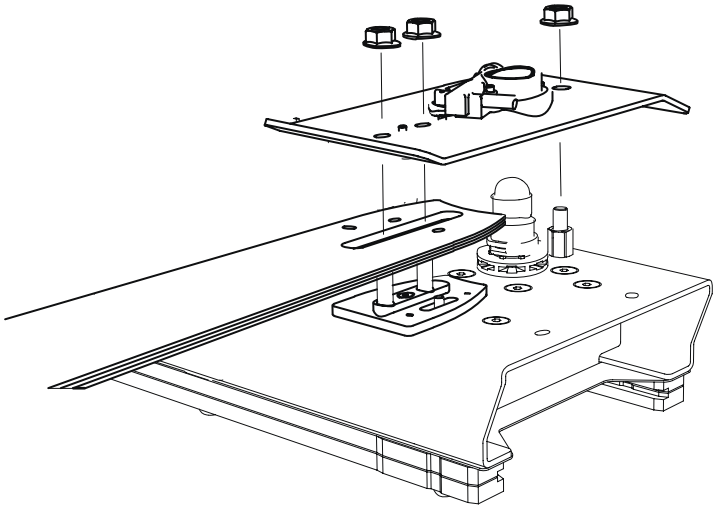

CHAIN TENSION

Make sure the power supply is cut. Slightly loosen the two nuts holding the guide bar. The chain is tensioned by putting tension in to the sword with the supplied tensioning arm. Do not tighten the the chain too much. You should be able to easily pull the entire drive link out of the groove in the guide bar using your thumb and forefinger. If the chain is tightened too much, it will lead to increased wear on both the chain and the guide bar. Retighten the guide bar nuts once the chain tension is correct.

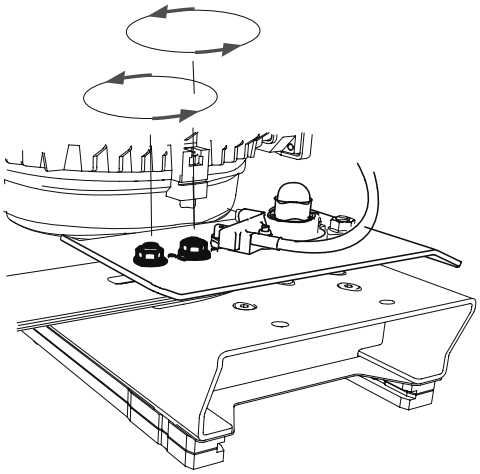

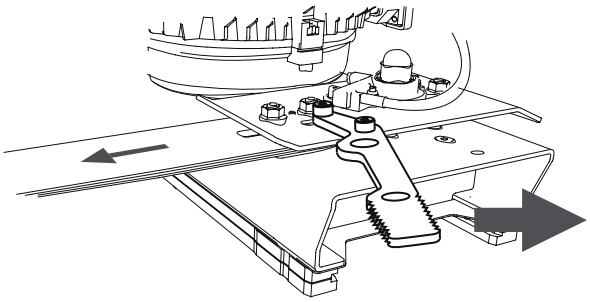

ELECTRICAL SYSTEM

The motor has thermal overheating protection. When the temperature in the motor winding becomes too high, the engine will stop and cannot be started again until it has cooled down.

The chain should rotate counter-clockwise seen from the cutting side of the guide bar. If, on delivery or after a cable change, the motor rotates in the wrong direction, the direction of rotation can be reversed by turning the phase inverter in the saw's electrical contact (the two pins on a white plastic disc). Use a big flat screwdriver.

To avoid voltage drop, it is important to always use as short a power supply cable as possible. The cable area must be at least 2.5 mm^2, and 4 mm^2 for cable lengths over 50 m. If the voltage is too low, the power of the motor will be reduced, and the electrical equipment may be damaged.

To start the saw unit, hold down the hold-to-run button (2) and press the green button (1) at the same time. To stop the saw unit, you can either release the hold-to-run button or press the emergency stop button (1).

1 Green= On, Red = Emergency Stop
2 Hold-to-run button
3 Electrical contact with phase inverter

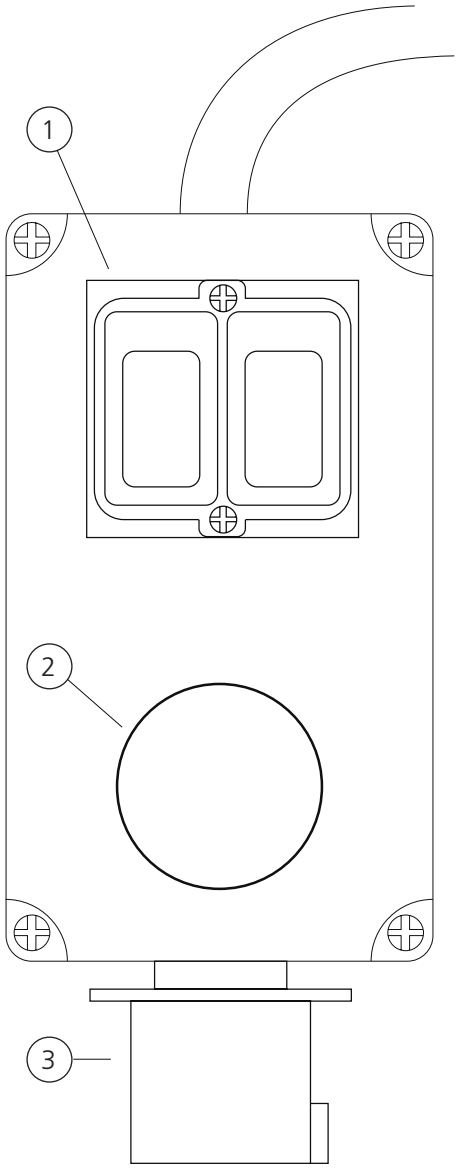

TROUBLESHOOTING

Causes of incorrect measurements

A. The sawmill is incorrectly adjusted or set-up.

B. The cutting equipment does not work as it should.

C. Tensions in the wood.

A. Checking the sawmill

1. Check that each of the four legs of the sawmill stands firmly and that the feet do not sink into the ground when the sawmill is loaded with a heavy log.

2. Check the levelness of the log beds to make sure that the sawmill is not skewed. Check both when the sawmills is loaded and unloaded.

3. Using a set square, check very carefully that the guide rail is at an exact 90° angle to the long legs. even a small deviation can lead to incorrect timber measurements.

4. Set the distance between the guide bar and the log beds so that it is exactly the same at both log beds. Make sure that the guide bar and the log beds are fully parallel.

5. Check that the guide rail is absolutely straight by sighting along it, or by stretching a string over the guide rail and using nails or the like as spacers between the string and the guide rail.

If support legs are used for the guide rail, it is essential that they stand on a rigid surface such as a pole driven into the ground.

Even factory-new guide bars can be out of true. This is detected if the parallel relation to the log bed changes when the guide bar is turned over. A bent guide bar is most easily straightened by being pressed up or down while the saw is mounted on the sawmill.

6. Check that the guide bar is straight in relation to the sawing direction by placing a straight 1.5 m long strip of wood on the guide bar (without the chain). Then sight across the wood strip. It must be parallel with the guide rail. If the wood strip is angled more than 5 mm forwards or backwards, it can have a negative effect on sawing. An out of true guide bar is corrected by placing washers between the carriage plate and the slide rail. Non-parallel guide bars most often occur when chainsaws other than Stihl are used.

7. The sawmill settings can be checked by placing a broad board of maximum length on the log beds for edging. First saw away a 1⁄4″ wood strip from one side of the board. Then turn the board, set both log beds to the same height and saw off a 1⁄4″ strip. Now measure the width of the board carefully. If the board is not the same width along its entire length, it means that the log beds are incorrectly set or that the guide rail is not straight.

B. Checking the cutting equipment

The guide bar must not cut upwards or downwards during sawing. If the cutting equipment is faulty, it is most noticeable when the guide bar leaves the log. If the guide bar does not ‘float’ out of the log but springs up or down, problems can arise. This can be an indication that there is something wrong with the guide bar or the chain.

Reasons for malfunction in the cutting equipment:

1. A common cause of sawing problems is that blunt chains are used.

2. The chain may be damaged on one side, for instance by metal objects in the log. The chain may still cut, but pulls up or down.

3. The chain may have been filed incorrectly. The teeth on one side may have been filed less than the ones on the other side. To get a more even result, try to maintain the same working position when filing the left and the right sides of the chain. A few teeth that are damaged or that are missing, e.g. by sawing through nails, usually have very small effect on the function of the chain.

4. When precision diminishes after a period of problem-free sawing, it is almost always due to wear on the guide bar.

5. If you get a ridged surface, consult The Handbook for Your Cutting Tools. It can be downloaded free of charge from our web site.

C. Tensions in the wood

The sawmill can only saw straight. If the wood twists during sawing, then precision will be lost. Tension can cause large variations in measurement. Hardwood often has higher tensions than softwood. But tensions in softwood can also be problematic. Trees that have grown on steep inclines, for instance, can have high tensions. In such cases, a whole group of logs can be difficult to saw.

Tensions can also arise in storage. If the bark and top segment begin to dry, the whole surface will begin to shrink. In such a case, the log may bend slightly, when one side is sawn.

It is easy to discover tension in the wood that leads to measurement errors. Each time you pull the saw back, you can read what is happening in the log. As long as the guide bar continues to lie just above the newly sawn surface, the log has not bent. However, when there is space between the guide bar and the sawn surface, or if the guide bar is pressed upwards when the saw unit is pulled back, it is time to plan how the next cut should be made to reduce the effects of tensions.

When sawing from the top towards the bottom of the cant, the cant has a tendency to bend downwards at its ends. This is especially true if there is large root-end growth. Due to this, it is uasaully best to turn the log over after passing through the centre, and saw the rest of the material from the other side.

If you still want to saw logs with high tensions, it can be a better alternative to use a chain saw and a Timberjig (SKU: 4900-000-1000) to slice up the log. The Timberjig follows the previously sawn surface and therefore gives better precision if the log bends.

Some tips for avoiding the effects of wood tensions

1. Cut wood with tensions in as short lengths as possible. By reducing the log length to app. 2.5 m, the precision will be high even if there are high tensions in the wood.

2. Work around the log, sawing all sides in order.

3. To get perfect measurements on the last board, you can use a newly sawn cant as underlay when making the last cut. Another way is to use special accessories for the sawmill to support the ends of the cant. If many logs that are over 3.5 m long are to be sawn, it is best to extend the sawmill by 1 or 2 m and add one extra log lifter/log bed.

TROUBLESHOOTING

PROBLEM/SYMPTOM	PROBABLE CAUSE	REMEDY
The saw cuts slowly	• Dull saw chain • The slide strips/guides are set incorrectly • Resin and dirt on the guide rail	• Resharpen or replace the saw chain. • Adjust the slide strips/guides as described in the instructions. • Clean the guide rail and use silicone spray (art.nr. 9999-000-5110) to reduce friction between the saw and the rail.
The guide bar wears out quickly	• Feed pressure too high • Substandard saw chain oil • Insufficient oil lubrication	• Reduce the feed pressure (especially when making narrow cuts). • Change to a high-quality saw chain oil. • Clean oil ducts and hoses.
Insufficient oil lubrication	• Dirt in oil bottle/hose/guide bar • Old oil has hardened • Worn oil pump • Worn plastic gear in oil pump	• Clean the entire oil system. • Clean the entire oil system. • Renew the oil pump. • Renew plastic gear in the oil pump.
Chain breakage	• Insufficient lubrication • The chain is too tight • Worn chain sprocket • The chain is too slack	• Clean oil ducts and hoses. • Adjust the chain tension as described in the instructions. • Check the chain sprocket and change if necessary. • Tighten the chain as described in the instructions.
The guide bar cuts upwards or downwards	• The bar rails are not at a level • Loose guide bar • Worn or incorrectly adjusted slide strips/guides.	• Grind the bar rails so that they are completely level. • Check that the guide bar is securely attached. • Check the slide strips/guides and change if necessary.
Angular error on the sawing result	• Misaligned bar nose steering • Loose guide bar • Worn or misaligned slide strips/ guides	• Adjust the bar nose steering so that the guide bar is parallel to the log beds. • Check that bar is securely attached • Check wear and adjustment of saw's plastic slide strips/guides. Adjust and/or renew if necessary.
Washboard patterns on the sawn boards	• Worn guide bar • Incorrectly sharpened saw chain • The sawmill is unstable	• Renew the guide bar or grind the bar rails • Resharpen the saw chain. • Check that the sawmill is firmly anchored with support under both rail ends.

CUTTING EQUIPMENT

LOGOSOL's ripping chain allows quick length sawing with a thin kerf. But it is less durable than normal chains. If you keep the cutting equipment in good condition, you get the right timber dimensions, faster sawing and the cutting equipment will last longer.

Sharpen the chain before it gets dull

When the chain is beginning to get dull, you will notice that the cutting speed is decresing, the guide bar becomes hot and it becomes harder to feed the saw unit forward. Stop sawing immediately! Acctually, when this happens, it is already too late to sharpen the chain. Sawing with a dull chain exposes the cutting equipment to high levels of mechanical stress. Therefore, sharpen the chain before it becomes dull!

Avoid chain breaks

If you are sawing too long with a dull chain, it can break. The chain breaks under the cutting teeth, and you will see that it is worn there.

If, however, a drive link breaks, this can be due to the chain and sprocket not being a good match. The best solution is to run 5 chains alternately on one chain drive. When the chains are worn out, then replace the entire set. A completely new chain on a worn sprocket can break in the first few minutes of use.

It is not recommended to run a normal 1.6 mm cross-cutting chain and 1.3 mm ripping chain on the same sprocket.

The guide bar can pull askew

If the chain has been damaged on one side or been filed unevenly, it can run incorrectly. The guide bar is pressed upwards or downwards and "springs back" when it comes out of the log. The chain will then wear more on one bar rail, and if you continue to saw the guide bar will wear unevenly. Even though you replace the chain, an unevenly worn bar can guide the chain incorrectly and, in addition, the new chain can also be worn down. An unevenly worn bar can be repaired. File bar rails so they are equally high e.g. with an edge file (SKU: 9999-000-0450) or LOGOSOL's electric guide bar grinder (SKU: 7804-000-0005).

Another more common reason for the guide bar pulling askew is that it is worn out so that the drive links touches the bottom in the track of the guide bar and the chain loses the support provided by the bar rails. This is shown on the chain by the tip of the drive link becoming worn.

The best chain oil

In order for the chain oil to work well it must be viscous and thready. When you place a drop between the thumb and the index finger and then open them, long threads should form. We recommend LOGOSOL's sawmill chain oil, SKU numbers as given below:

1 litre, SKU: 0718-000-1001
10 litres, SKU: 0718-000-1010

Handbook for your cutting tools

LOGOSOL has a separate document which we keep updated with respect to the technical specification of the latest new products. It is called 'The Handbook for Your Cutting Tools' and can be downloaded free of charge from our web site. You can also order a printed version.

SAWING: TIPS AND ADVICE

At the start, it can be a good idea to draw lines on the log ends showing what you are planning to cut out from the log. Use a broad tip marker pen to make the line correspond with the kerf.

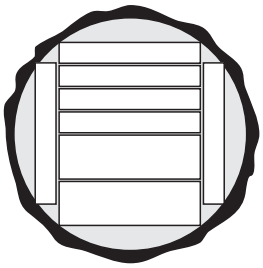

Keep in mind that:

- when an unsawn surface of the log faces down, the log bed where the top end of the log rests is to be set higher than the one where the root end rests.
- The beds are set to the same height when a sawn surface faces down.
- Compensate for the kerf (1 click equals 1/4”) when the board is cut above the guide bar.
- Do not compensate for the kerf when the board is cut under the guide bar.
- The last board must not be thinner than 2”.
- Make sure that you do not cut into the log clamps.

Through-and-through sawing

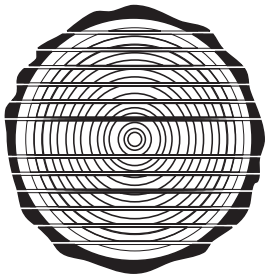

Sometimes, it can be better to slice up the log into waney-edged boards. This way you can get a little more out of every log. However, this method takes a bit more time. When cutting fine joinery timber, it can be a good idea to edge only one side before drying the timber. The last edging is not made until you know what the board is to be used for. This is to be able to make use of as much as possible of the timber.

When you are going to slice up a log, it is best if you first cut off a thin slab and then turn that side down to make the log rest on a flat surface on at least one of the log beds. This prevents the log from moving between the cuts and you will have nice and even boards.

Rotate the log when you have come close to the centre of the log. Calculate at what height you should start sawing.

Remember to compensate with 1/4” for every cut.

Quarter sawing

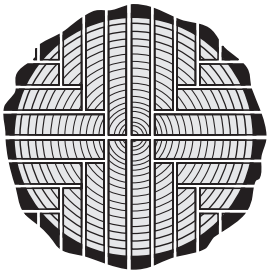

Quarter sawing provides you with the finest timber. You get optimum grain direction in every board, which is a big advantage when the wood is intended for cabinetmaking e.g. The downside is that it takes time, it is difficult, and you get several different board widths. Quarter sawing should not be applied when cutting small logs.

Start by cutting the log in half at its centre. Then you cut through the middle of the halves to get quarters.

When cutting the boards, you turn the cant after each cut. Sometimes, it can be easier to cut from below. This way the height of the log beds can be left unchanged.

Does this seem difficult?

We are many here at LOGOSOL that have long experience in sawing. If you, as a new sawmill owner, have any question, you are warmly welcome to call us. We are happy to provide you with useful tips and advice.

PRECISION

Demands for precision

We are convinced that a chain sawmill can provide as good results as, or better results than, other small-scale sawing methods. A large number of our customers have reported that they have never had better wood products than those they have sawn themselves. However, it is natural that we also meet customers who want to improve on the precision. Experience has shown us that variations in sawing results can have many explanations. The choice of raw material is vital. Cutting good boards from short, sturdy logs is considerably easier than getting high precision results from long, thin ones. Tensions caused by storage or place of growth can cause problems. Some tree types cause more problems than others, etc.

The precision requirements also vary. A result that is satisfactory for someone sawing boards for rustic fence posts may not be good enough for someone sawing boards to be used in construction without being planed first.

If you have gone through the various steps for adjusting the sawmill, checked the cutting equipment and observed the effects of tensions in the wood, but still do not get the sawing results you expect, please contact us at Logosol.

DRYING THE WOOD

Once the wood is sawn it must be dried. If this is not done in the right way, then there is a danger it will be damaged by fungal rot.

The best time for outdoor drying is in the spring. The relative humidity of the air is very low and the wood will dry in a couple of weeks.

Cut some supportive blocks in the length that corresponds to the width of your pile, ideally larger pieces, e.g. 5”5, to raise the wood from the ground, which should also be dry, level and free of growth. The spacing should not exceed 1 m and should lie level and in line with each other.

Cut spacers or drying sticks in the same length as the supportive blocks.They should be of the same thickness (1x1” or 1x2”) and dry. (You can get material for these by making an extra cut when edging your boards.)

Place the first row of boards on the underlying surface. The boards are to be of the same thickness and be positioned a few centimetres apart. Then place spacers on the boards (in the same positions as the underlying supportive blocks) before the next layer is laid. It is important to place the spacers exactly over each other, to keep the boards from warping or bending.

The higher you pile the boards, the better pressure there is on the lower boards. Place roofing of plastic, metal sheeting or masonite over the top to provide protection from rain, but leave the sides open. Put a weight of some sort on the roof to put pressure on the top boards.

If the wood is to be used for fine joinery, it should be stored in a heated room for another 3-4 weeks (longer for thicker dimensions) or be dried in a wood drying kiln for a perfect result.

It is possible to use undried wood in some constructions, but it must be kept in mind that the width and height will shrink 5%. Wood also shrinks around 0.3% in length, but this can usually be disregarded. In order to avoid rot, you should not enclose undried wood in a way that makes it hard for air to circulate. One further tip: Do not drive two nails next to each other as the board will probably crack in the middle when it dries out. Drive one nail and wait with the second until the wood has dried.

One example of where you should use undried wood is when building log structures. In such a situation, a heavy wall is a plus, as is the possibility that the logs still can be shaped when they are pressed against each other.

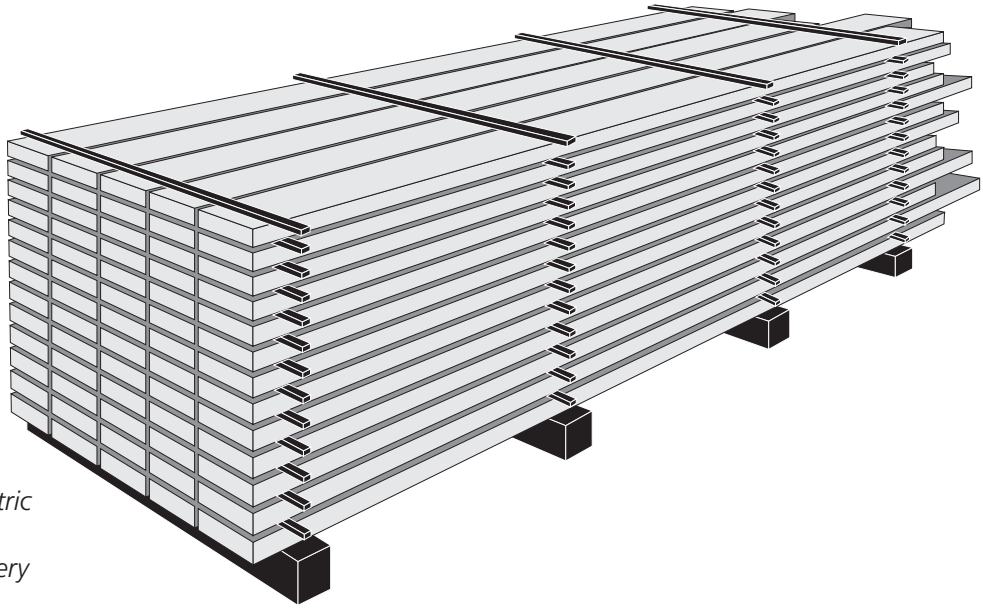

LOGOSOL also has electric wood drying kilns for preparation of fine joinery timber.

EU declaration of conformity

In accordance with Directive 2006/42/EG, Annex 2A

Logosol AB
Arkivvägen 6
SE-871 53 Härnösand, SWEDEN

hereby declares that **Logosol ES5/ES8 electric chainsaw**

is manufactured in accordance with:
Machinery Directive 2006/42/EG
EMC Directive 2004/108/EU

and has been manufactured in conformity with the following harmonized standards:
EN ISO 12100:2010
EN 60204-1:2006
EN 50370-1, -2.

Notified body, 0404,RISE SMP Swedish Machinery Testing Institute AB, Box 7035, 750 07 Uppsala, Sweden, has executed EC type-examination according to Directive 2006/42/EG, article 12, paragraph 3b. The EC type examination certificate has the number: 0404/17/2408

The delivered electric chainsaw corresponds to the machine that was subject to EC type-examination.

2025-09-29

ROBERT BERGLUND, CEO

LOGOSOL
Arkivvägen 6, SE-871 33 Härnösand, SWEDEN
+ 46 611-182 85 | info@logosol.com
www.logosol.com