LOGOSOL

USER MANUAL

Part no. 0458-395-0691

REV: 3

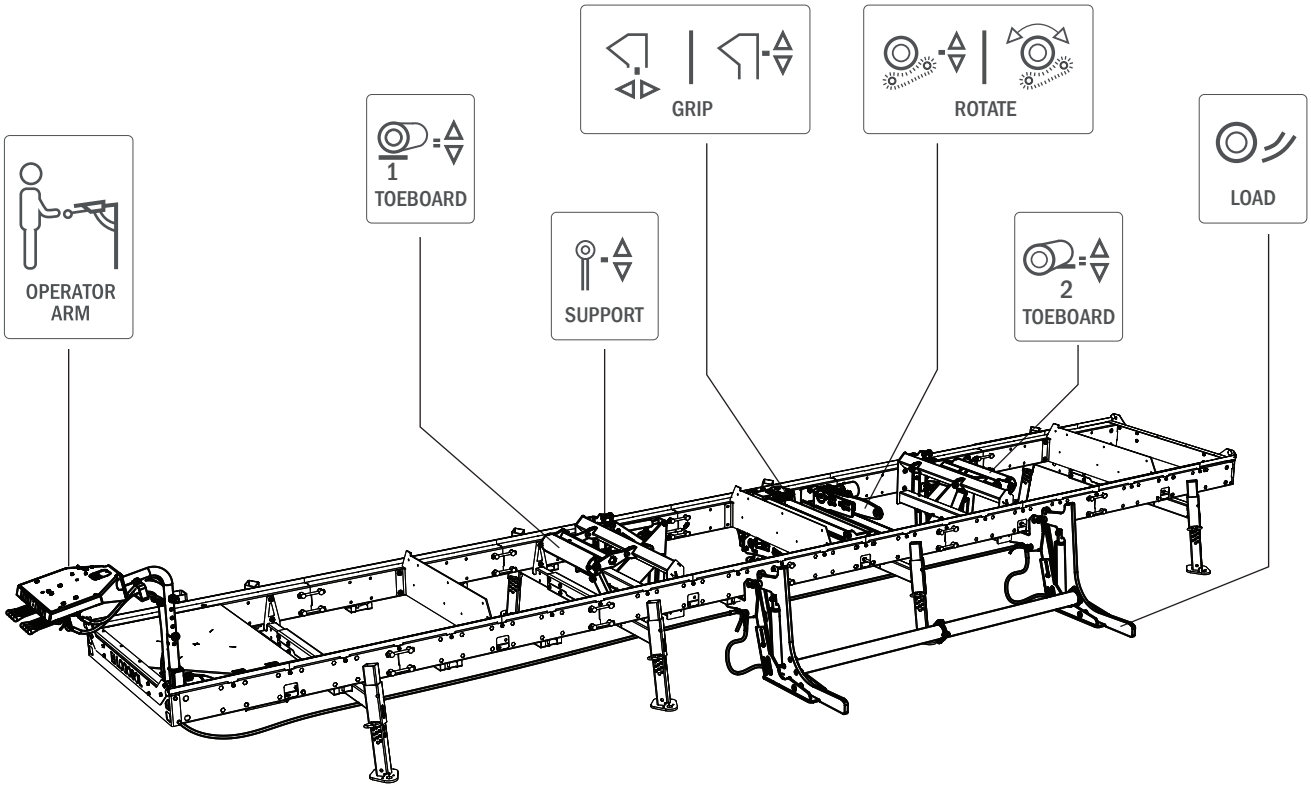

LOGOSOL

B1001 HYDRAULIC

EN

THANK YOU FOR CHOOSING A LOGOSOL MACHINE!

We are very pleased that you have demonstrated your confidence in us by purchasing this machine and we will do our utmost to meet your expectations.

LOGOSOL has been manufacturing sawmills since 1989, and in that time we have supplied approximately 50,000 machines to satisfied customers the world over.

We are concerned with your safety and ensuring that you achieve the best possible results with your machine. We therefore recommend that you take the time to carefully read this user manual before using the machine. Remember that the machine itself is only a part of the value of the product. Much of the value is also to be found in the expertise we pass on to you in the user manual. It would be a pity if that was not utilised.

We hope you will be thoroughly satisfied with your new machine.

Bengt-Olov Byström
Founder,
Logosol in Härnösand

Read through the user manual carefully and make sure you understand its contents before using the saw.

This user manual contains important safety instructions.

WARNING! Incorrect use can result in serious or fatal injuries to the operator or others.

LOGOSOL continuously develops its products.
For this reason, we must reserve the right to modify
the configuration and design of our products.
Document: LOGOSOL B1001 Hydraulic User Manual
Manual, part no.: 458-395-0690
Text: Martin Söderberg, Martin Melin
Illustrations: Martin Söderberg, Anna Fossane
© 2026 LOGOSOL, Härnösand, Sweden

TABLE OF CONTENTS

Description of machine	4
Safety instructions	5
Maintenance	7
Technical data	9
Delivery: Component parts	10
Assembly	**18**
Connecting the unit and pairing the valve	40
Hydraulic hose	47
Adjustment	49
First start-up	50
Use	51
Transport	53
Exploded views	54
Hydraulic diagram	65
Troubleshooting	66
CE declaration	68

DESCRIPTION OF THE MACHINE

LOGOSOL B1001 HYDRAULIC

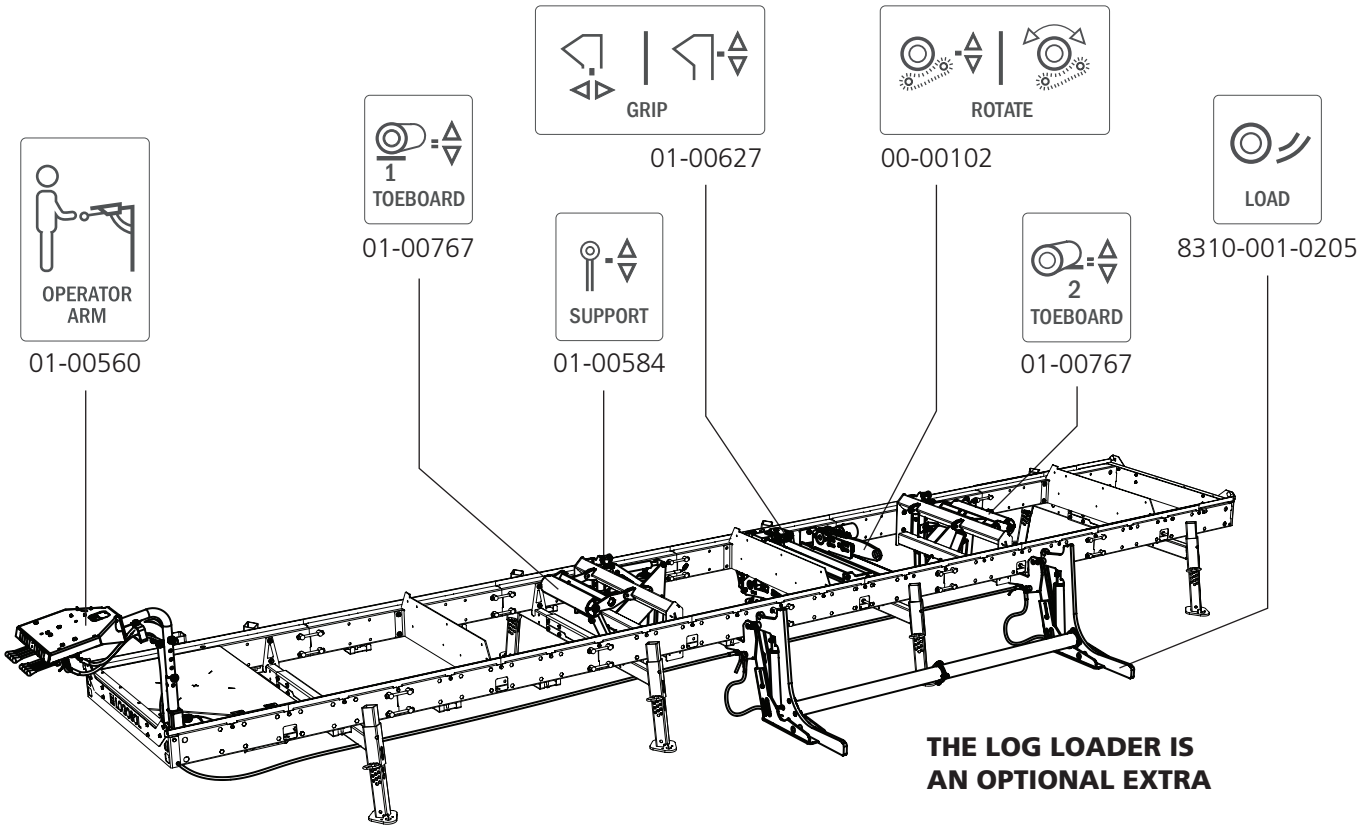

SAFETY INSTRUCTIONS

- Read carefully through the entire manual before putting the machine into operation. Failure to observe these safety instructions may result in fatal injuries.
- Make sure that everyone who uses the machine is well informed of the dangers and has read the manual. The manual must be available at all times for those working with the machine.
- Minors under the age of 18 are not allowed to use the machine.
- Make sure that children and animals are not in the vicinity when the machine is being operated.
- Anyone working with the machine should be in good physical shape, healthy and well-rested. Take regular breaks. Do not work under the influence of alcohol, drugs or medicines that may cause drowsiness or inattentiveness.
- The machine should only be used where there is good visibility. Do not work in the dark or where visibility is poor.
- Make sure there are other people within earshot in case you need help.
- Use only LOGOSOL manufactured products or those expressly approved for the purpose when adding extra equipment . Other equipment may result in risk of accident and must not be used. Logosol will not accept liability for personal injury or material damage incurred while using non-approved attachments on the sawmill.
- Always wear personal protective equipment: Appropriate clothing is, for example, a tight-fitting work overall. Never work with loose clothing, jacket or similar.
- Wear steel cap shoes with deep-tread soles for good grip. Do not wear a scarf, tie, jewellery or the like that can catch in the equipment.
- Wear heavy duty protective gloves. Risk of cuts when handling the equipment.

KEY TO SYMBOLS

WARNING! This symbol means that you have to take particular care. It is always accompanied by information on the specific risk.

ATTENTION. A warning comes after this symbol. Pay particular attention where this symbol appears in the manual text.

For your own safety and that of others, do not use the bandsaw mill or handle bandsaw blades without first reading through and understanding the contents of this user manual in its entirety.

WARNING! Cutting tools: Incorrect use of the machine can lead to life-threatening injuries. Band blades are extremely sharp and dangerous.

Always use protective gloves (class 1) when working with the band sawmill or handling bandsaw blades. Risk of sustaining cuts when handling band blades. Bandsaw blades and motor parts can be hot after sawing.

Always use approved hearing protection when working with the machine. Even brief exposure to high frequency noise can damage your hearing. Always use close-fitting safety goggles when working with the machine or handling bandsaw blades. Under certain circumstances the use of a protective mask may also be advisable. This would primarily apply if you are sawing dry wood or sawing indoors.

Always wear approved protective footwear with saw protection, steel toe-caps and non-slip soles when working with the machine or handling bandsaw blades.

Always wear full-length protective trousers when working with the machine or handling bandsaw blades. Never wear loose-fitting clothing, scarves, necklaces, etc. that may fasten in the machine when working. Tie up long hair before working with the machine.

SAFETY INSTRUCTIONS

Safety distance

Warning! Fire risk. Hydraulic oil is flammable, do not perform hot work in the vicinity of hydraulic components and equipment.

Warning! Do not exceed the maximum weights specified for the equipment. Overload can entail sudden breakdowns making the work area dangerous

Warning! Pinch risk. Do not remain within the work area when the hydraulic cylinders are loaded.

Warning! Cuts. Never handle pressurized hydraulic hoses, oil from a pressurized hose can penetrate the skin and cause serious injury.

Warning! Burn injuries. Allow the equipment to cool down before working with hydraulic units and hoses. The hydraulic oil can reach high temperatures during use.

Handle hydraulic hoses and couplings carefully during assembly and maintenance work. Avoid sharp bends on hydraulic hoses. Sharp bends damage the hoses and increase the risk of breakdown.

Do not lift or handle hydraulic equipment connected to the hoses or couplings.

Always use hydraulic oil prescribed by Logosol when working with the equipment.

Always wipe up any spillage of hydraulic oil from the product and the working area. Residual hydraulic oil constitutes a slip hazard to users.

Always use absorbent cloths beneath the equipment when working with the machine.

Before each shift:

Check hydraulic hoses, couplings and cables for visible damage.

Warning! Do not exceed the maximum weights specified for the equipment. Overload can entail sudden breakdowns making the work area dangerous

Always check that the specified amount of hydraulic oil is in the tank before starting the machine.

During operation

The sawmill is not to be in any other position than level when in operation. Risk of tipping!

- Keep the worksite free of tools, pieces of wood, sawdust and other items that present trip hazards.

In the event of problems of any kind, stop work immediately and turn off the machine until it has been resolved. Always keep this in mind. Most accidents involving dangerous machines occur when something malfunctions and the operator has to correct this during operation. A stop seldom shows up on the finished product.

SAFETY INSTRUCTIONS

Safety distance:

Make sure that nobody is within the safety distance when working with the machine.

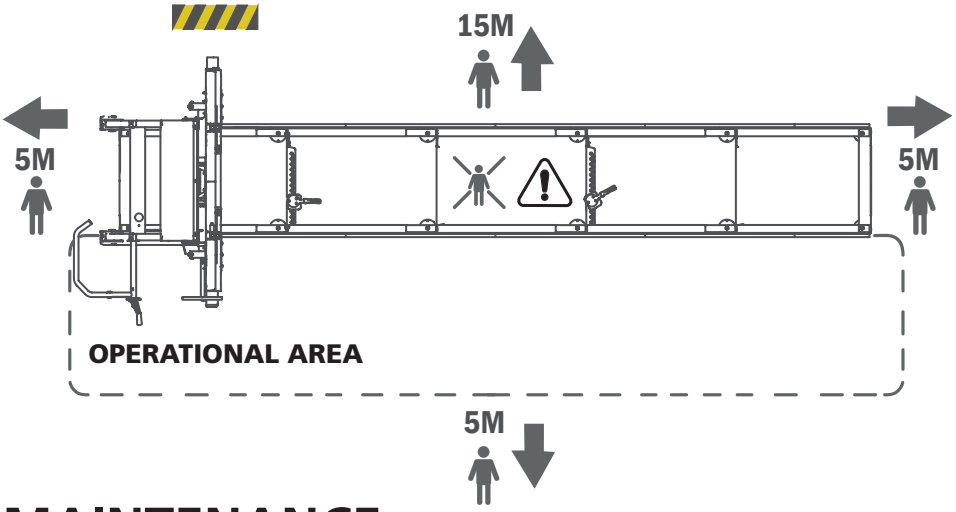

MAINTENANCE

MAINTENANCE

Periodic maintenance of the machine expected to be performed by the operator is described in this section. Be sure to follow the specified maintenance intervals, as this is the basis for good function of the machine.

BEFORE WORKING ON THE MACHINE

Always unplug the power cable at the mains before starting service or adjustment. Check that the power cable, plugs and switches are in good condition and undamaged. Clean all parts of the machine with a brush and dry cloths. Store the machine in a dry, clean and non-corrosive environment, out of reach of children. Check that all screw joints are tightened.

WARNING! Risk of serious injury:

Make sure that the machine is turned off before servicing and maintenance. Always wear work gloves (Class 1) when undertaking maintenance on the machine

WARNING! Cuts:

Be careful when working with the machine as it has sharp edges.

WARNING! Fire risk:

Do not smoke or perform any work (welding, grinding, etc.) on the machine that can generate ignition sparks in the vicinity of fuel or combustible materials.

If you spill oil on the machine during refuelling, this should be wiped up immediately. If you get oil on your clothes, change them at once.

Never run the engine if there is an oil leak. Always turn the engine off before refuelling.

MAINTENANCE

CLEANING THE MACHINE

Clean the bandsaw mill after each shift. Sweep away shavings and sawdust around the functions and on and around the rails.

EVERY START-UP

Check scraper rings:
Make sure that dirt and shavings do not accumulate on the scraper rings.

Check for oil leaks:
Check all connections for oil leaks

Check the oil level:
Check the oil level in the hydraulic tank before each shift. Follow the maintenance schedule in the engine instruction manual.

Check safety features:
Before each shift, check the function of the following safety features:
Make sure that the valve levers return when the handle is released.

Check screw joints:
Check that there are no loose screw joints on the machine.

OIL CHANGE

Change the oil for the first time after about 30 hours of work. With normal operation, the second change is not needed until about 4-500 hours of work. Hydraulic oil: (ISO VG 32).

If a petrol unit is used, the hydraulic oil filter must be changed at 300 hours of use, see the hydraulic unit instruction.

Petrol unit

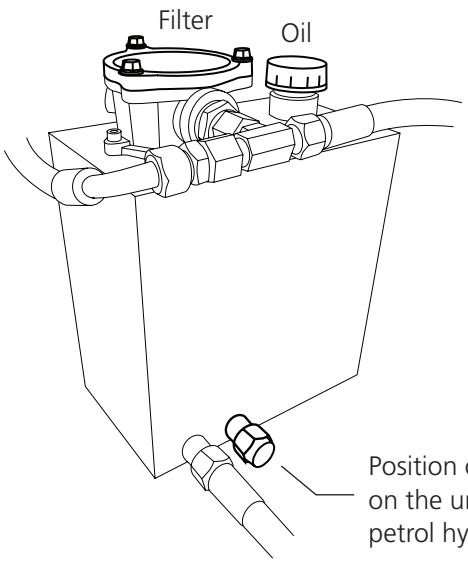

Position of the oil plug on the underside of the petrol hydraulic unit.

Power unit

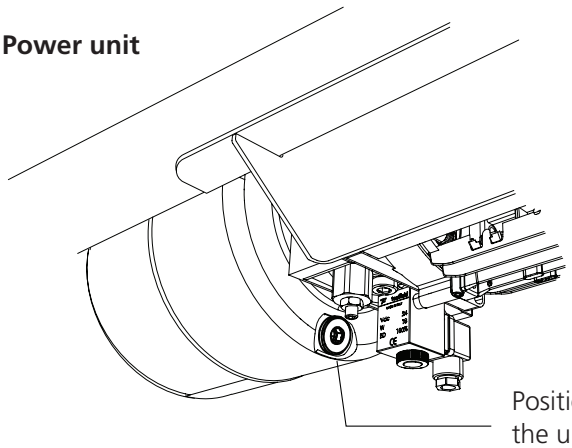

Position of the oil plug on the underside of the electric hydraulic unit.

TECHNICAL DATA

LOGOSOL HYDRAULIC B1001/B751	
01-00684 LOG BED HD	
Quantity	2 pcs
Function	Sturdy tubular structure that the log rests on, with the option of connecting the toeboard and log support functions.
01-00556 TOEBOARD	
Stroke length toeboard	70 mm
Diameter roller	100 mm
Quantity	2 pcs
Function	To increase the top diameter regardless of the orientation of the log. Facilitates longitudinal movement of logs, if both are activated.
01-00627 LOG CLAMP	
Double horizontal guides, profile 2 x 40 mm	
Vertical stroke	300 mm
Minimum clamp width	20 mm
Maximum clamp width	700 mm
Bearing	Double bushes and dust seals for all linear log holder movements.
Control	A double-acting hydraulic cylinder with 300 mm stroke, connected to a 40 mm rod for vertical movement. A double-acting hydraulic cylinder with 200 mm stroke, connected to linkage for horizontal movement.
01-00584 LOG SUPPORT	
Vertical stroke	305 mm
Cylinder	150 mm
Quantity	2 pcs
Diameter of the support	40 mm
Bearing	Double sets of bushes and dust seals on each log support.
Control	A double-acting hydraulic cylinder with 150 mm stroke, connected to linkage.
00-00102 LOG ROTATOR	
Control	Robust hydraulic cylinder for raising/lowering. Hydraulic motor for chain drive. Hydraulic motor for chain drive.
00-00604 LOG LOADER	
Lifting capacity	2,000 kg
Maximum log diameter	1,000 mm
Minimum log length	2,100 mm
POWER PACK	
Power unit	3 kW, 400 V CEE 16A, Hydraulic tank 4 l, Max. pressure 175 bar Max. flow 9 l/min. Compatible with the 01-00770 work platform
Petrol unit	Honda GX200 6 hp, Hydraulic tank 5 l, Max. pressure 175 bar Max. flow 12 l/min. Not compatible with the 01-00770 work platform
Oil volume	There is approximately 10 l of oil in the system with all functions connected
01-00560 CONTROL PANEL	
Manually operated valves	7+1 functions (log loader is optional)
Control	Can be raised, lowered and rotated to improve visibility. Can be locked for transportation.
	Work platform [680 x 950 mm] to protect the power unit.

BOLTS/NUTS

Definition of fasteners.

Centre bolt

Cross screw

Slotted screw

Locking screw

Hex nut

Flange nut

Flat washer

Allen screw

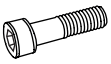
Allen screw (partially threaded)

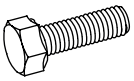
Hex bolt

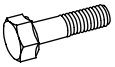
Hex bolt (partially threaded)

Flange screw

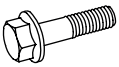
Flange screw (partially threaded)

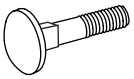
Carriage bolt

ADDITIONAL SYMBOLS

The following symbols are used in addition to those shown above to describe part design.

Low

Tensilock

Lock

Counter-sunk

Dome

DIMENSIONS/LENGTH

The dimensions of the fasteners are printed as a diameter dimension (M) ISO 68-1. This is followed by a length dimensions for bolts/screws; the dimension of a bolt/screw is the part of the bolt/screw that disappears into the material in which it is mounted.

(Diameter)		(Length)
M8	x	20

The symbol describes the sawing direction and reappears during assembly.

The symbol describes the recommended lifting point for heavy lifts.

When this symbol appears during assembly, parts must be lubricated before installation. Lubricate affected parts with universal grease.

Make the joint finger-tight.

The symbol plus a number that refers to packages of hose and nipples.

DELIVERY: COMPONENT PARTS

The hydraulics are delivered in several different packages. The different functions are packed as shown in the illustration below. Arrange the component parts according to each function before starting the assembly.

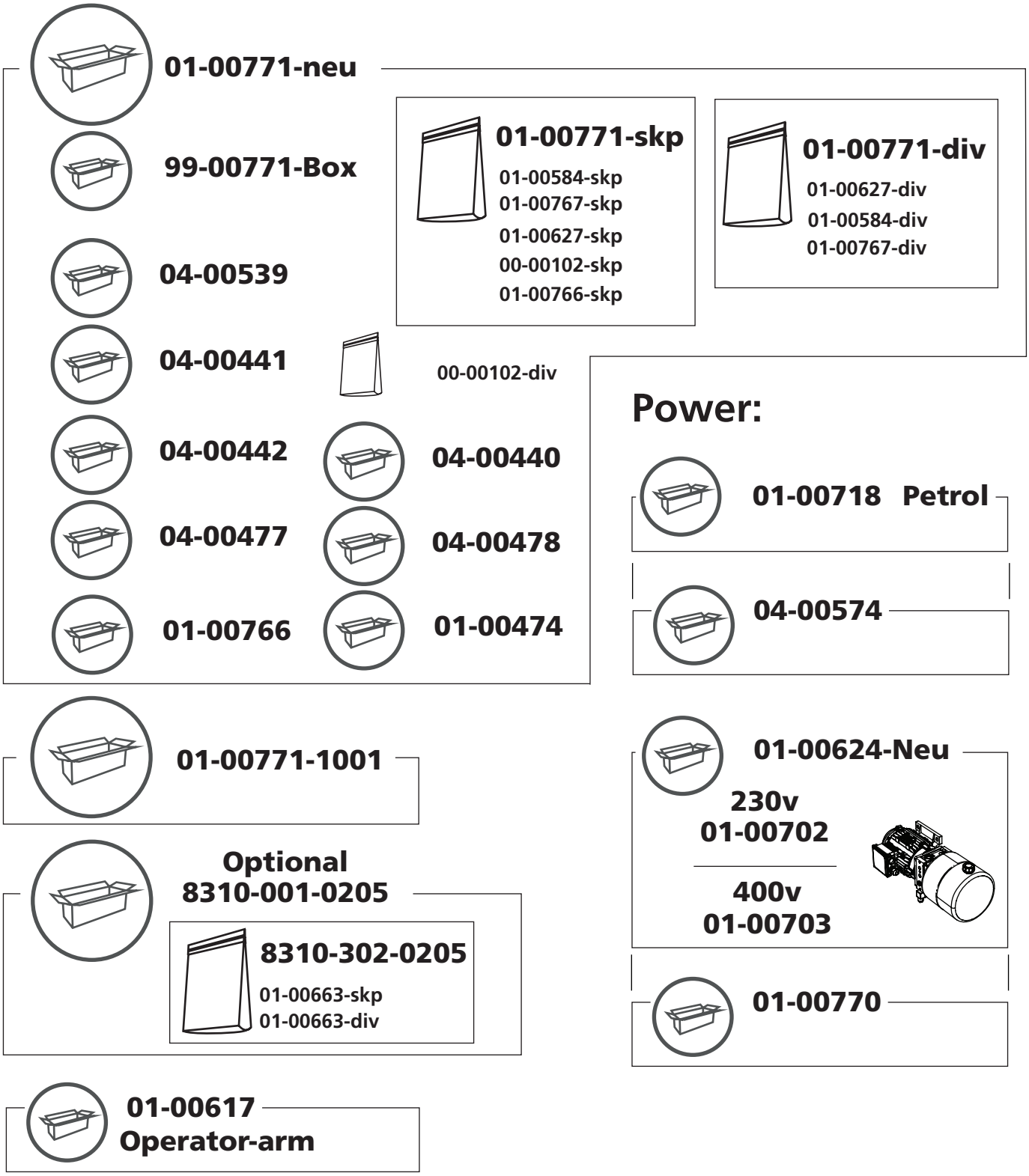

SUPPORT

01-00771-neu
01-00584

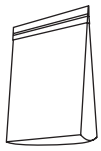

01-00584-skp

- 2 x – M8x75
- 6x – M10x110
- 2x – M10x130
- 1x – M10x90
- 4 x – M8x16
- 12 x – M8x20
- 8 x – M10x50
- 4 x – M10x20
- 6 x – M12x25
- 2 x – M8
- 17 x – M10
- 12 x – M8
- 8 x – M8

02-00445 — 2 x

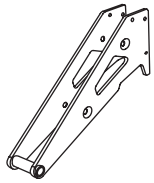

03-02815 — 2 x

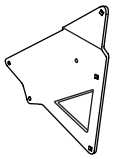

03-02816 — 2 x

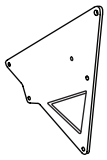

03-02838 — 2 x (515mm)

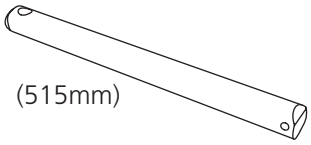

04-00488 — 1 x

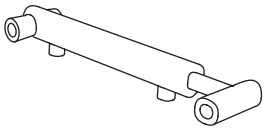

03-03036 — 2 x

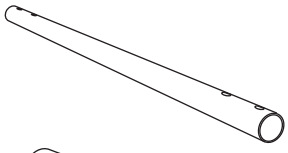

03-03038 — 3 x

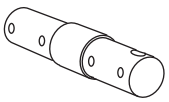

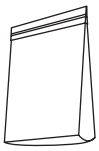

01-00584-div

- 4x – 03-02814
- 3x – 03-02820 (61mm)
- 6x – 03-02822 (83mm)
- 4x – 03-02830
- 4x – 03-02834 (23,5mm)
- 4x – 03-02839
- 4x – 03-02842 (29,5mm)
- 2x – 03-02843 (100mm)
- 1x – 03-02971 (59,5mm)
- 2x – 03-03293
- 4x – (8,5x12x11)

04-00539

- 04-00538
- 04-00537
- 4x (1/4)
- 4 x (1/4- 1/4)
- 2x (1/4- 1/4)

99-00771-Box

01-00769 — 2 x

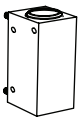

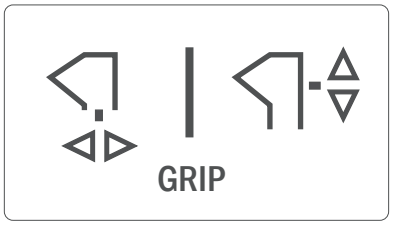

01-00771-neu
01-00627

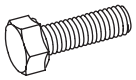
8 x – M12x100

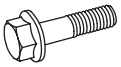
1 x – M10x100

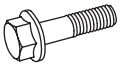
2 x – M10x110

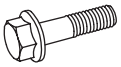
2 x – M10x140

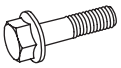
1 x – M16x100

5 x – M12x30

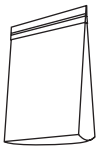
01-00627-skp

8 x – M12

1 x – M16

5 x – M10

10 x – M12

2 x – M8

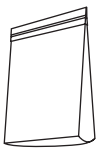
01-00627-div

2x – 03-02868 (105mm)

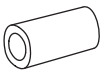
3x – 03-02878 (77mm)

2x – 03-02879 (35mm)

01-00771-1001

04-00365

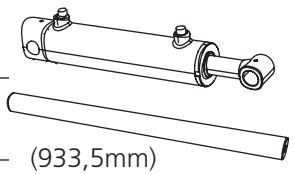

03-02730 — 2 x (933,5mm)

99-00771-Box

01-00628

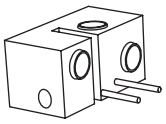

02-00468

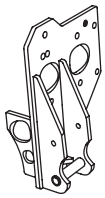

03-02925

02-00447

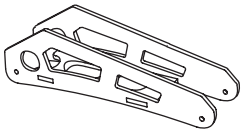

02-00448

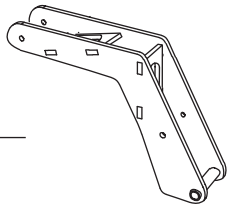

02-00469

02-00460

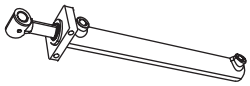

03-02871 — (450mm)

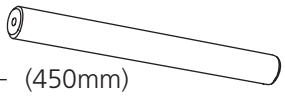

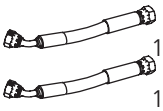
1x 04-00535
1x 04-00536

04-00442

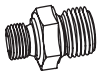
2x (1/4- 3/8)

2x (1/4- 1/4)

2x (1/4)

2x (3/8)

2x (1/4- 1/4)

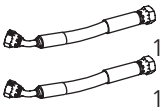
1x 04-00532
1x 04-00531

04-00441

4x (1/4- 1/4)

4x (1/4)

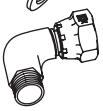
2x (1/4- 1/4)

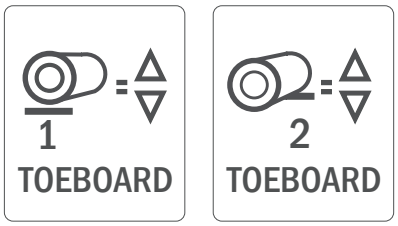

01-00771-neu

01-00767

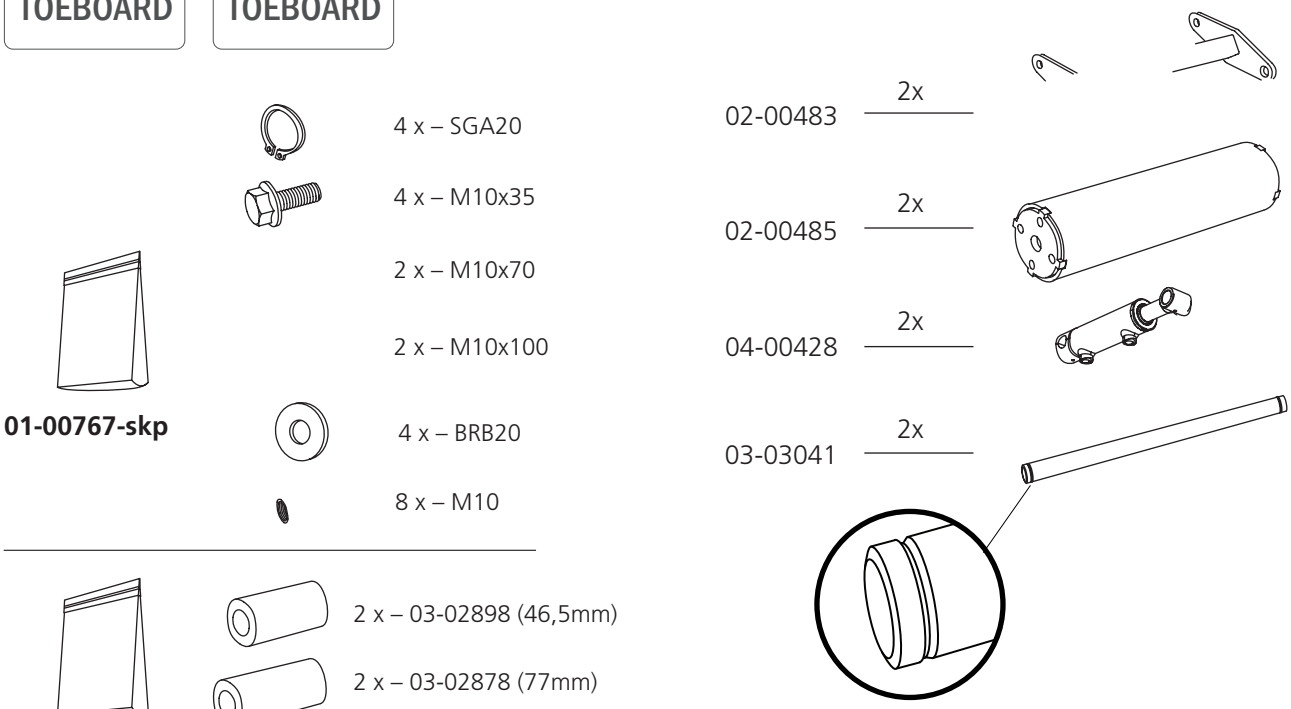

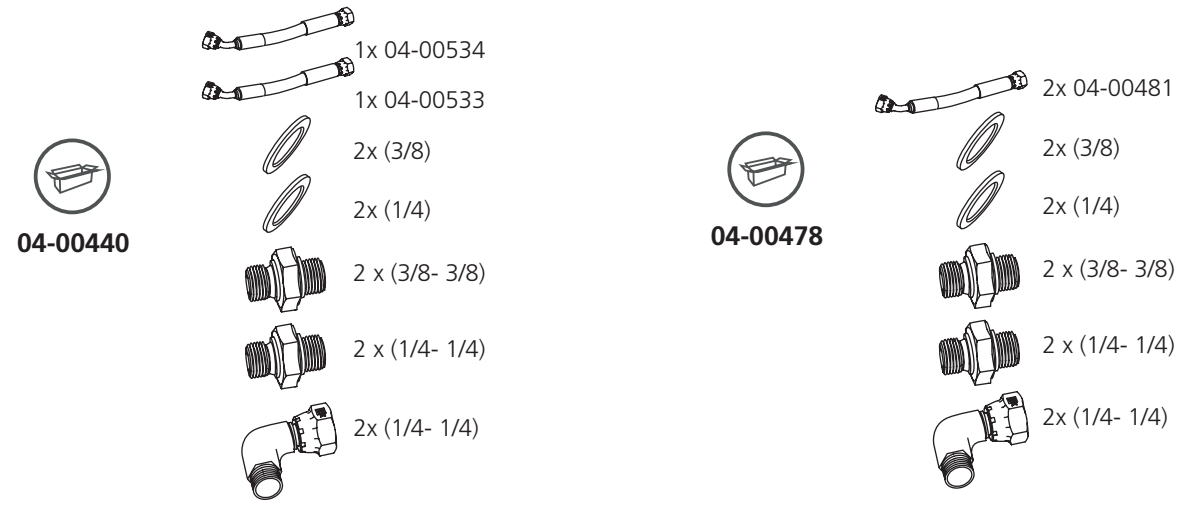

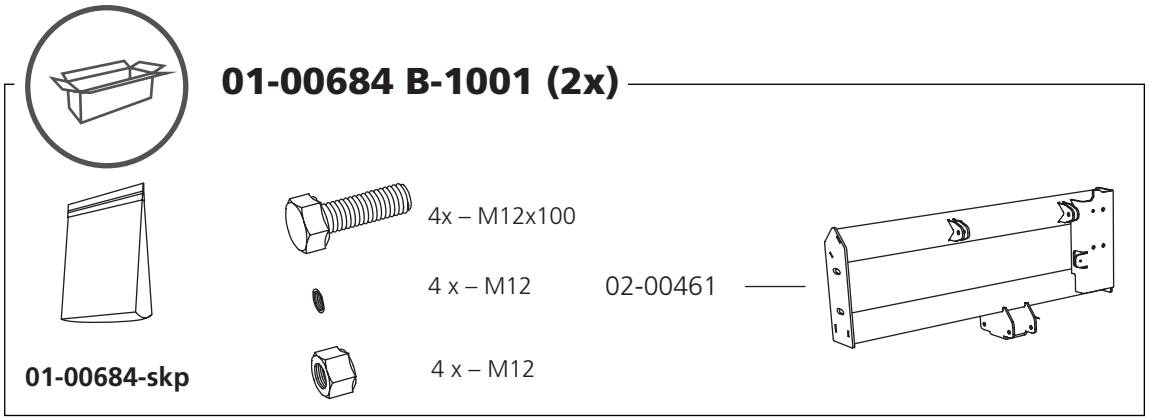

01-00771-neu
01-00560

OPERATOR ARM

01-00624-Neu

4 x – M10x25
4 x – M10
2x – M12x100
4 x – M12
4 x – M4
4 x – M4
02-00462

01-00624-skp
SKP powerpack

2x 04-00530
2x (1/4- 1/4)
2x (1/4- 3/8)
2x (1/4)
2x (3/8)

04-00439

01-00718

03-03154
03-03181
04-00547
3x – M12x100
6 x – M12
1 x – M8x20
1 x – M8

01-00718-skp

2x 04-00575
4x (1/4- 3/8)
2x (3/8)

04-00574

01-00617

02-00465
02-00487
02-00449
03-02857
04-00521 2x
2 x – M8x20
1x – M12x100
2 x – M12
4 x – M6x16
4 x – M6

01-00617-skp
SKP operation arm

01-00766

04-00420 2 x
03-03106 2 x
03-02957 10 x
04-00528 1 x
04-00591 2 x
080-828-021-0070 1 x
04-00526 8 x
8 x

1 x 04-00482
1 x 04-00483
4 x (1/4- 3/8)
4 x (3/8)

04-00444

6 x – M8x14
6 x – M12
2 x – M12x90
2 x – M12x25
10 x – M10x80
10 x – M10

01-00766-skp

01-00770

02-00458
1 x
4 x – M12x100
8 x – M12
3 x – M6x12
3 x – M6

01-00770-skp

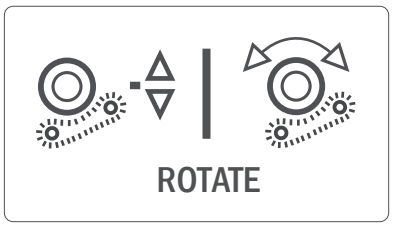

01-00771-neu
00-00102

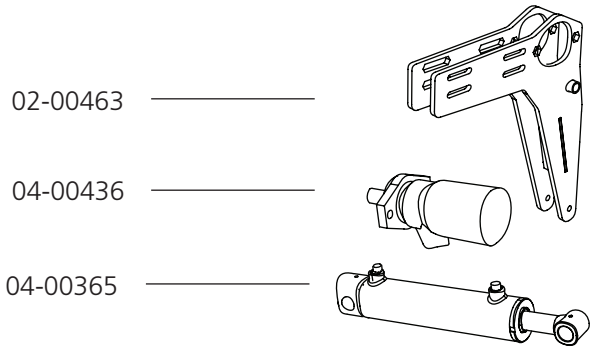

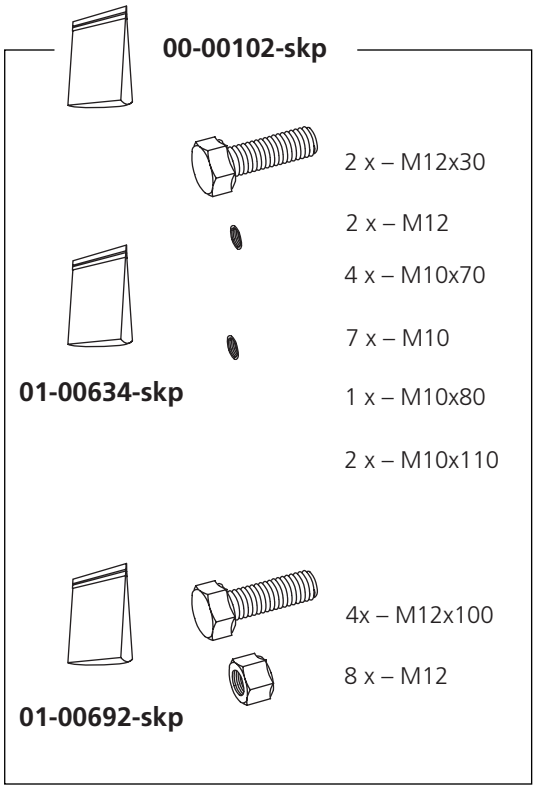

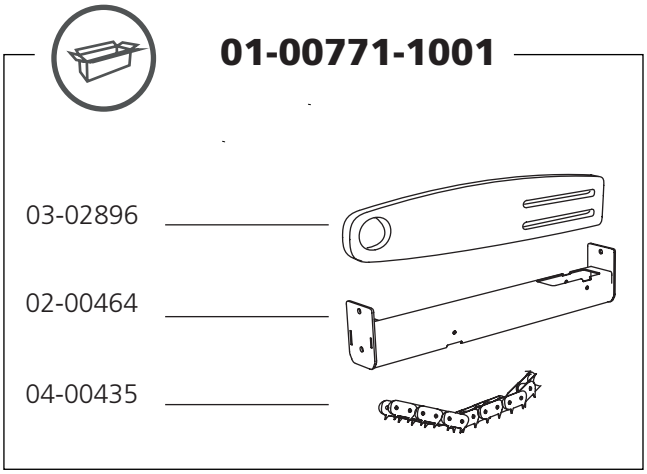

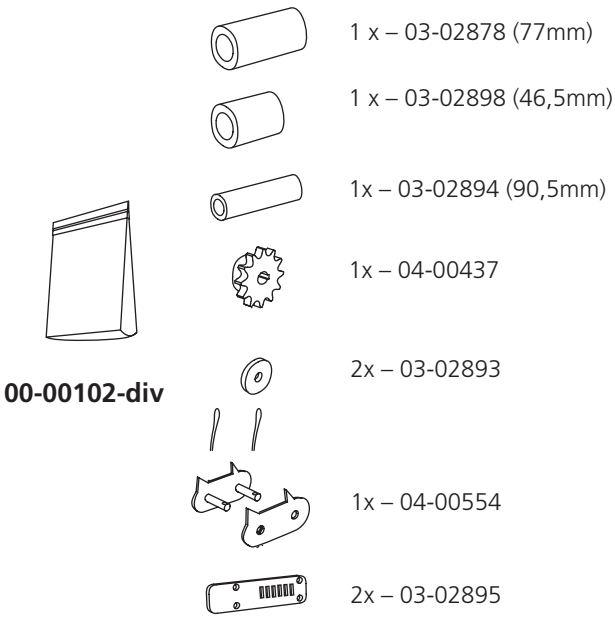

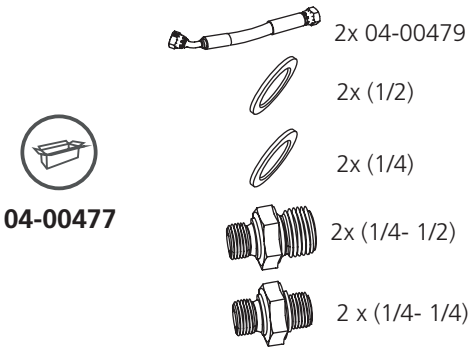

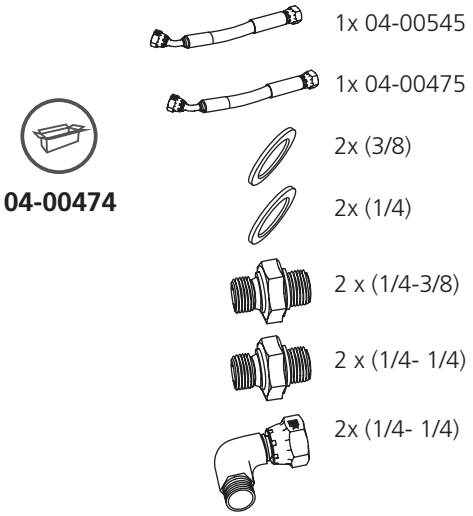

LOAD

8310-001-0205

03-02902 — 2 x

02-00481 — 2 x

02-00472 — 2 x

04-00552 — 2 x

02-00482 — 2 x

02-00470 — 2 x

03-03001 — 2 x

8310-302-0205

01-00663-skp

- 8 x – M10x20
- 4x – M12x100
- 2x – M12x110
- 2x – M12x130
- 4x – M10x25
- 8x – M10x30
- 2x – M12x55
- 4 x – M8x40
- 8 x – M12
- 20 x – M10
- 6 x – M12
- 4 x – M8
- 8 x – BRB10
- 4 x – BRB12

01-00663-div

- 2x – 03-03094 (97mm)
- 2x – 03-03105 (78mm)
- 2x – 03-03102 (21,8mm)
- 4x – 04-00553

04-00468

- 2x 04-00592
- 16x (1/4)
- 16 x (1/4- 1/4)
- 4x 04-00470
- 2x 04-00471
- 2x 04-00472

Let’s get started!

We recommend laying out all fasteners on a tray or similar to make it easier to find screws.

Symbol: Assembly

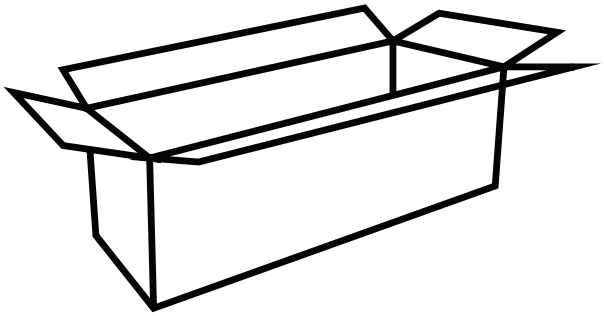

ASSEMBLY

The position is important so that all functions fit on the rails. We start from the joints on the rail pipes and then count the hole pattern from the relevant joints to find the correct position.

The assembly assumes that the saw rails have an extension. If a second extension is fitted, it shall be mounted on the far end of the rails.

To be able to mount new functions in the rails, it is important to release existing log beds in order to facilitate installation of the new functions.

When this symbol appears during assembly, parts must be lubricated before installation. Lubricate affected parts with universal grease.

This symbol describes the sawing direction and reappears during assembly.

01-00627

03-01976

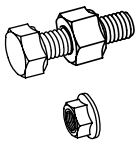

4 x – M12x100 +M12

4 x – M12

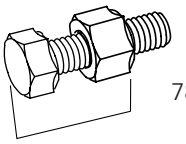

78,5mm

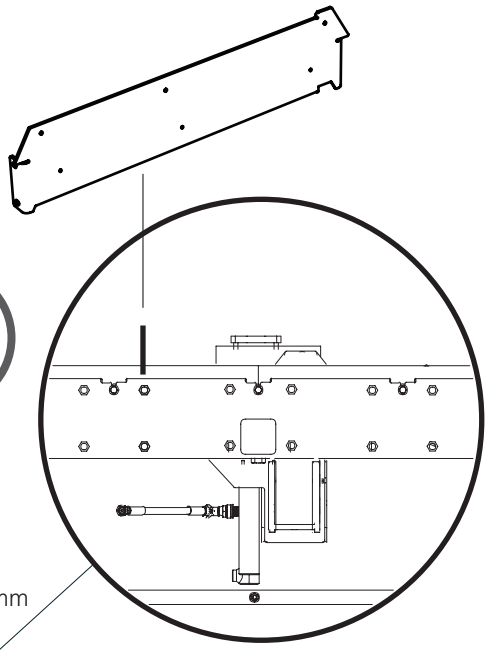

Suggested position of support legs and standard log beds when installing hydraulics:

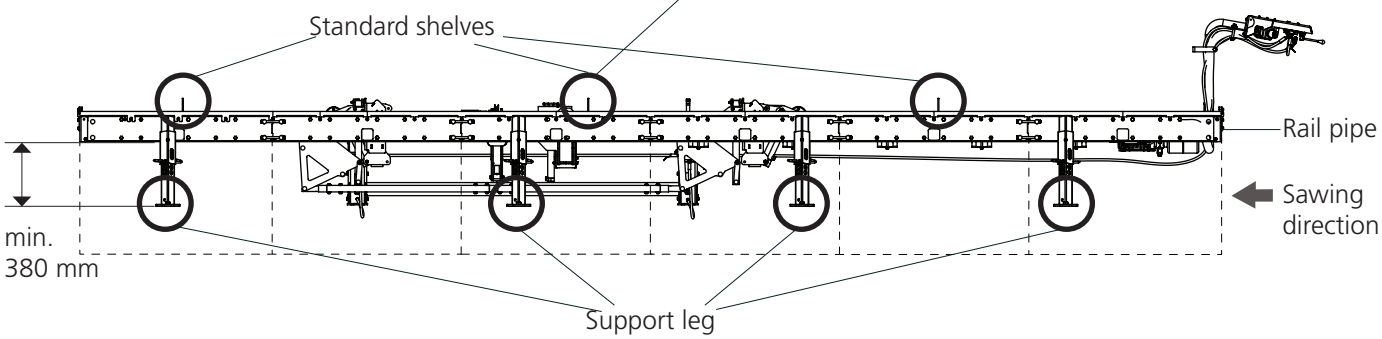

01-00767

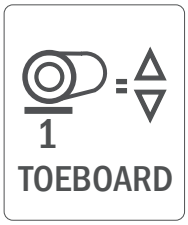

POSITION

The parts from package **01-00767** are needed to start assembly work.

Position 01-00767

The log beds are positioned on pipes number **3** and **5** viewed in the sawing direction.
The log beds are then placed on hole pattern 3 counted from the joint of the pipe in the sawing direction.

Count the hole patterns from the pipe joint, the log beds should be placed on the third hole pattern from the relevant pipe joint.

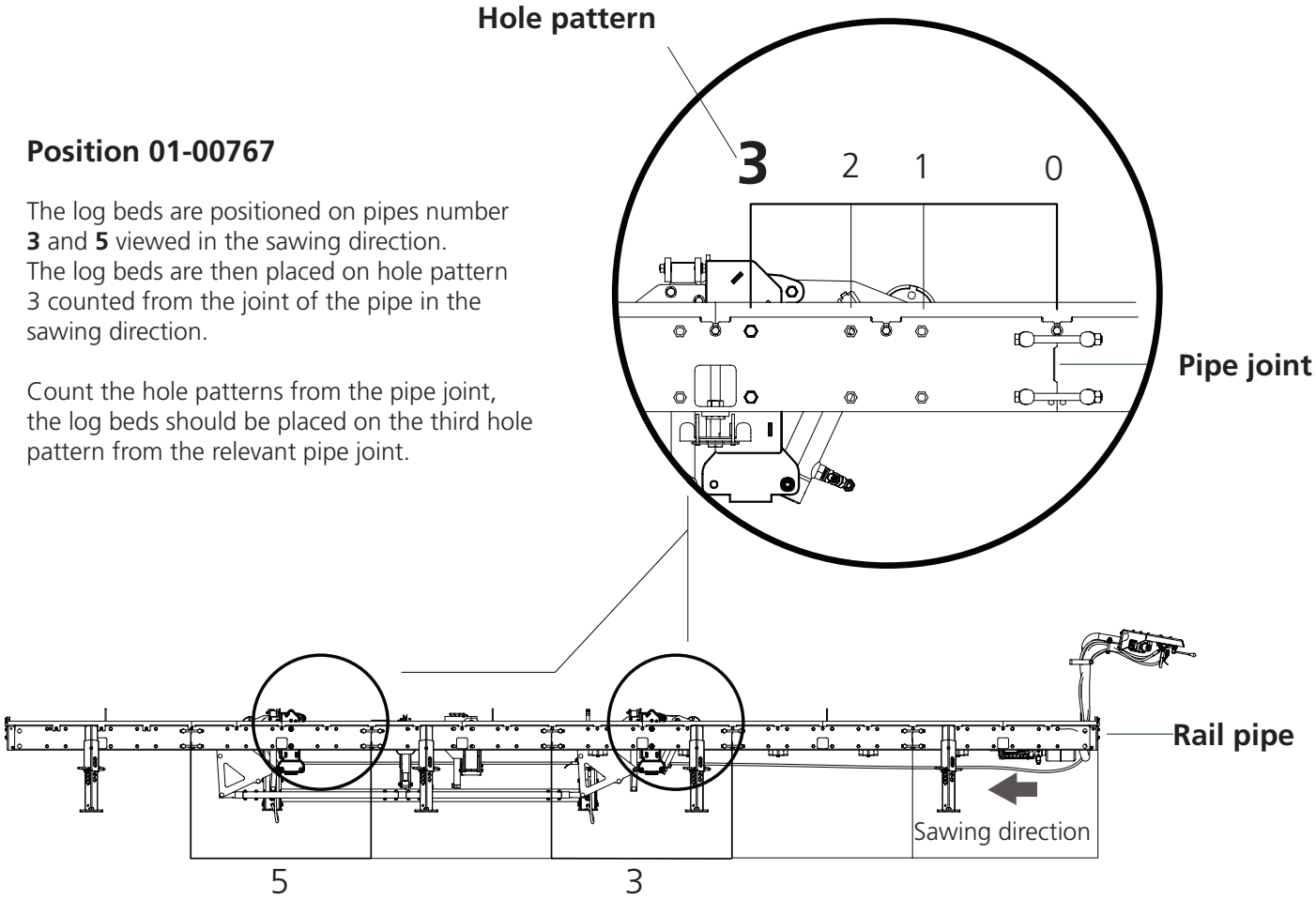

01-00767

1

4 x – M12x100

4 x – M12

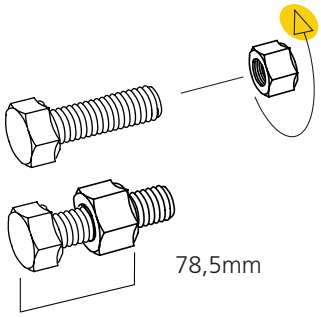

2

4 x – M12x100 + M12

4 x – M12

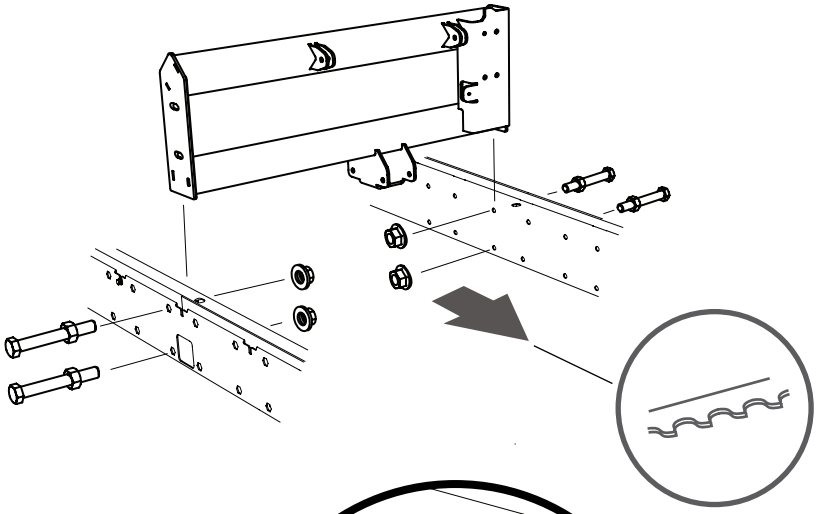

3

1 x – M10x100

1 x – M10

1 x – 03-02878 (77mm)

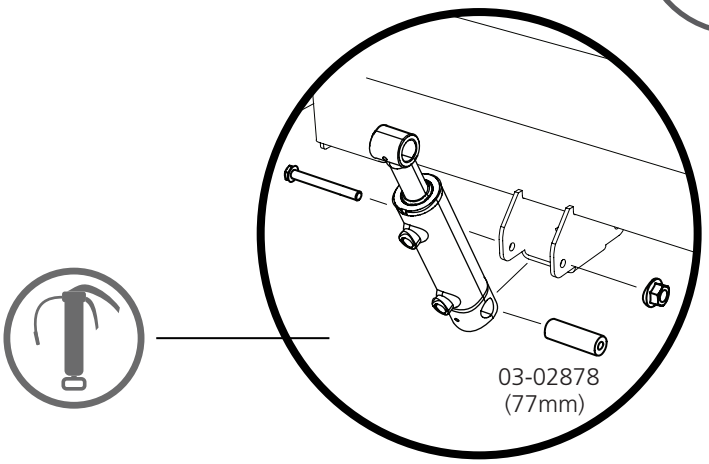

4

2 x – BRB20

2 x – SGA20

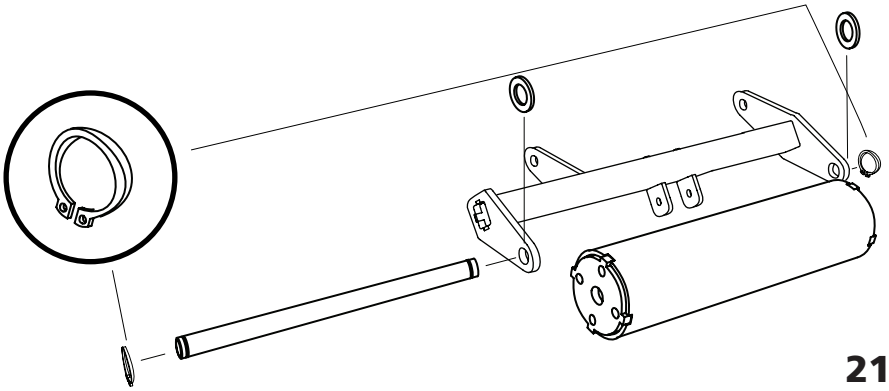

01-00767

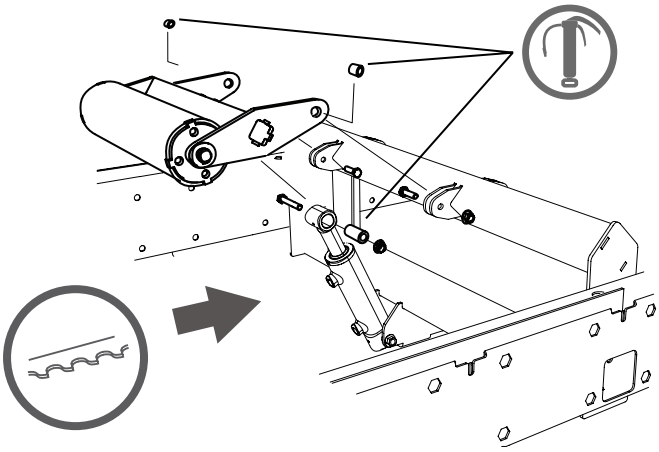

Note that the two toeboards should be mounted on each side of their respective bed. Toeboard (1) shall be mounted closest to the operating position.

2x – 03-02926 (11,5mm)

2x – M10x35

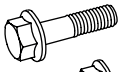
1x – M10x70

3x – M10

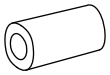
1 x – 03-02898 (46,5mm)

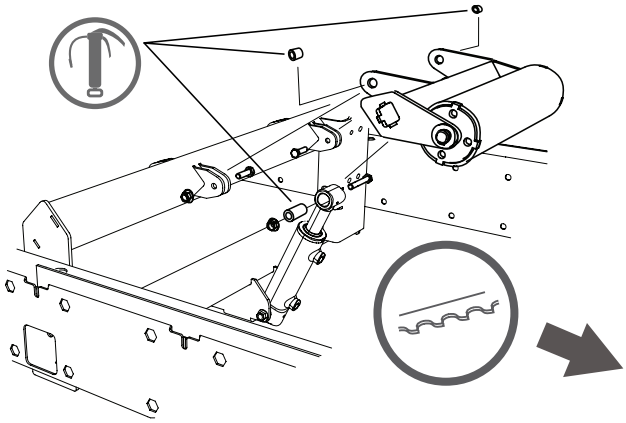

We recommend laying out all fasteners on a tray or similar to make the task easier.

To be able to mount new functions in the rails, it is important to release existing log beds in order to facilitate installation of the new functions.

WARNING PINCH RISK! In this section of the assembly there is a risk of injury through crushing, so be careful and wear work gloves.

01-00584

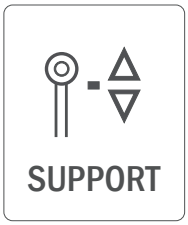

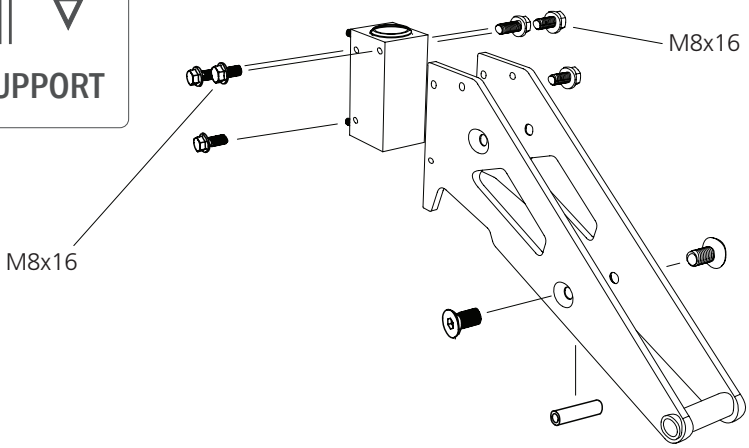

2 x – M8x16

4 x – M8x20

2 x – M12x25

03-02820 (61mm)

01-00584

2

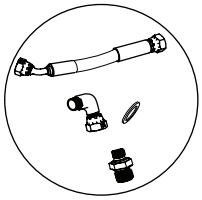

04-00539

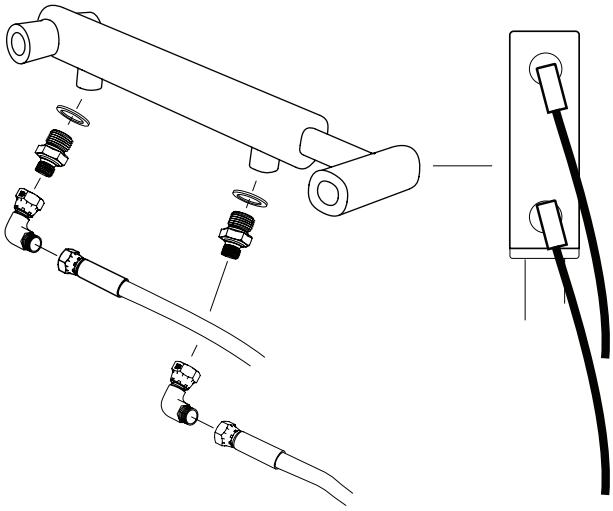

3

2 x – M12x25

1x – 03-02820 (61mm)

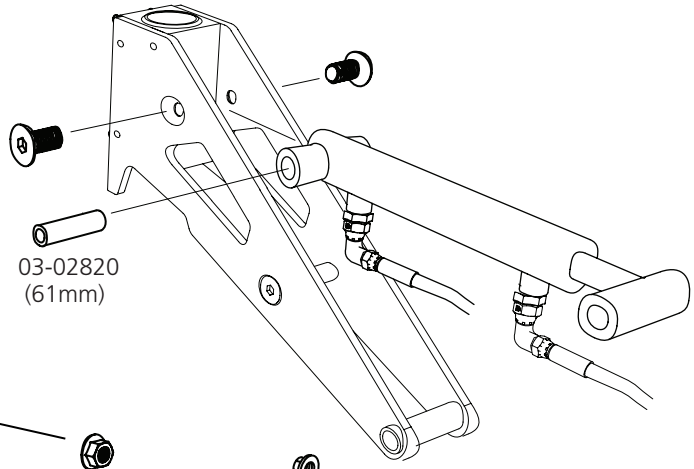

4

5 x – M8

1 x – M8

1 x – M8x20

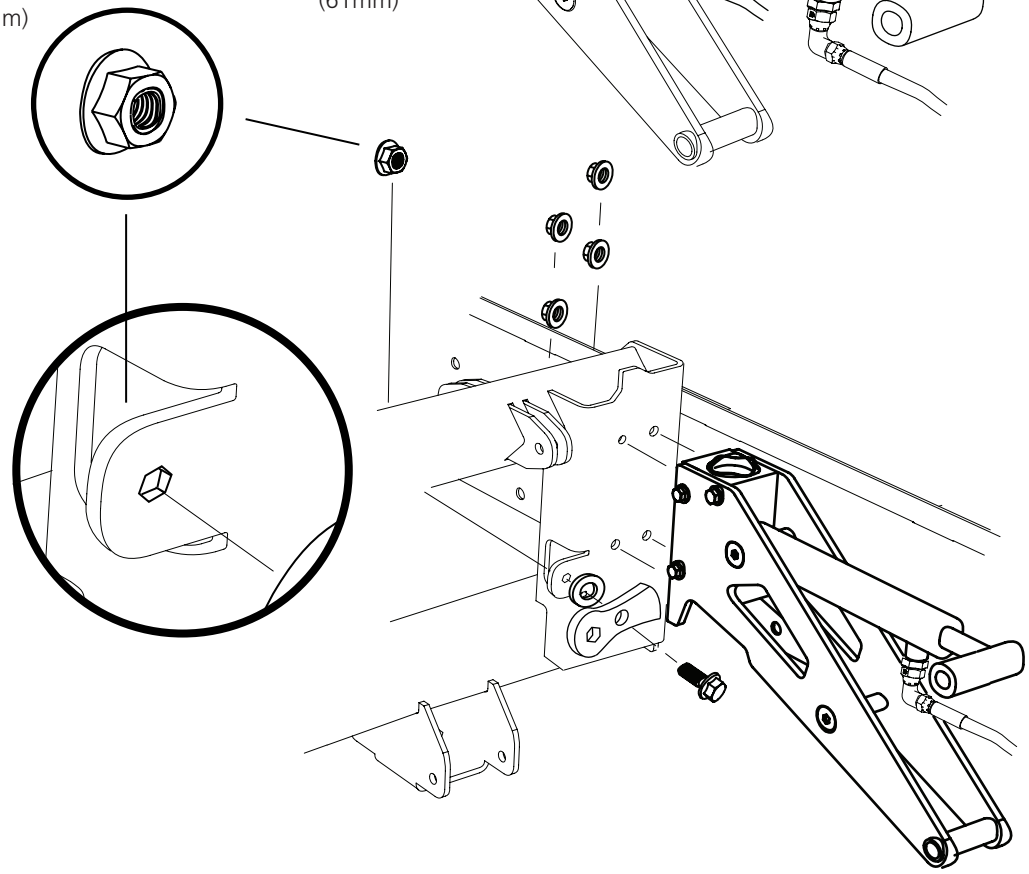

01-00584

5

1 x – M8x75

1 x – M8

2 x – M8

2x – DR-01467

2x – 03-02839

6

2 x – M10x20

1 x – M10x110

1 x – M10

1x – 03-02822 (83mm)

2x – 03-02830

2x – 03-02814

7

1 x – M10x90

1 x – M10x110

2 x – M10

1x – 03-02971 (59,5mm)

1x – 03-02822 (83mm)

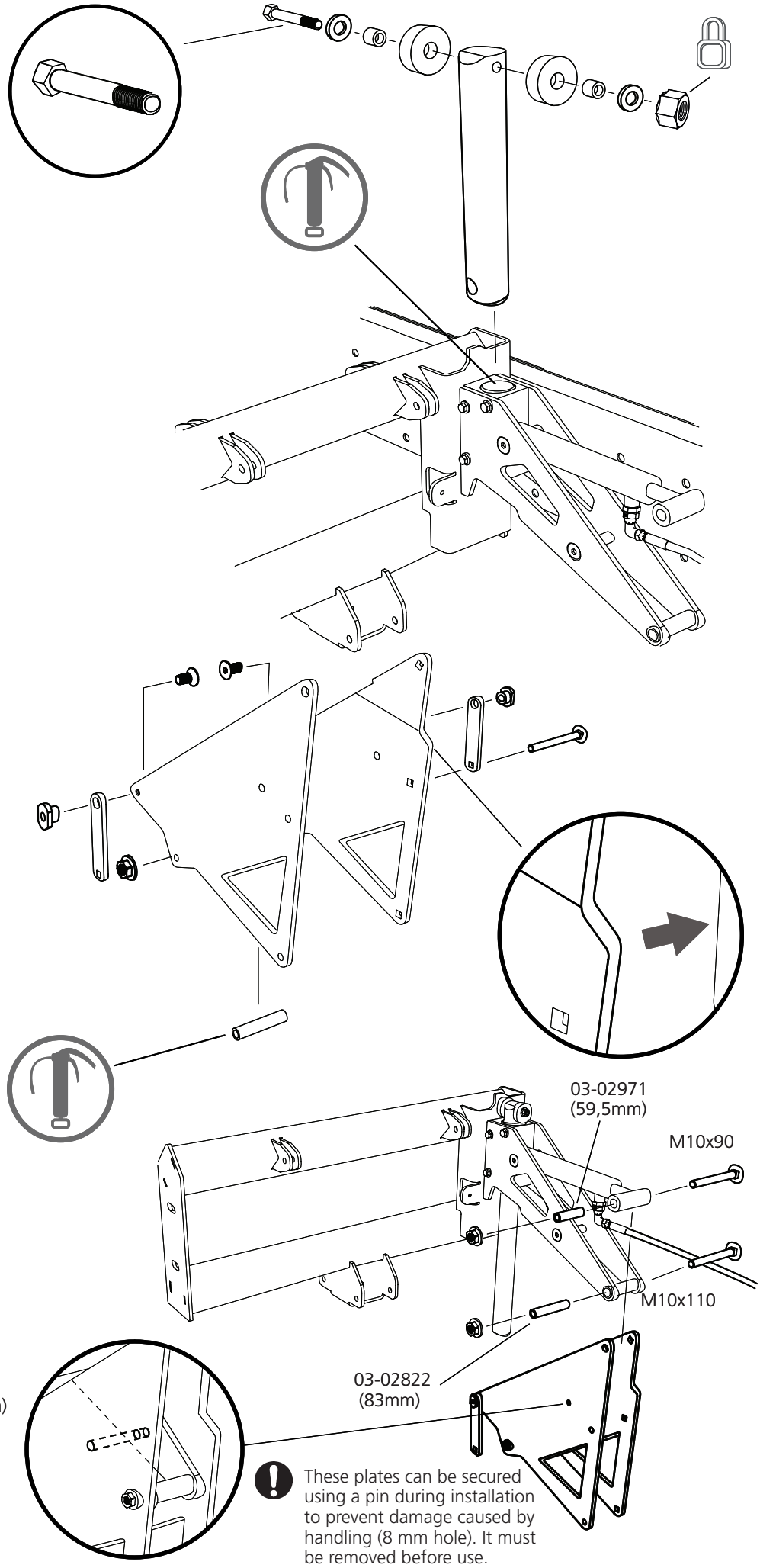

These plates can be secured using a pin during installation to prevent damage caused by handling (8 mm hole). It must be removed before use.

01-00584

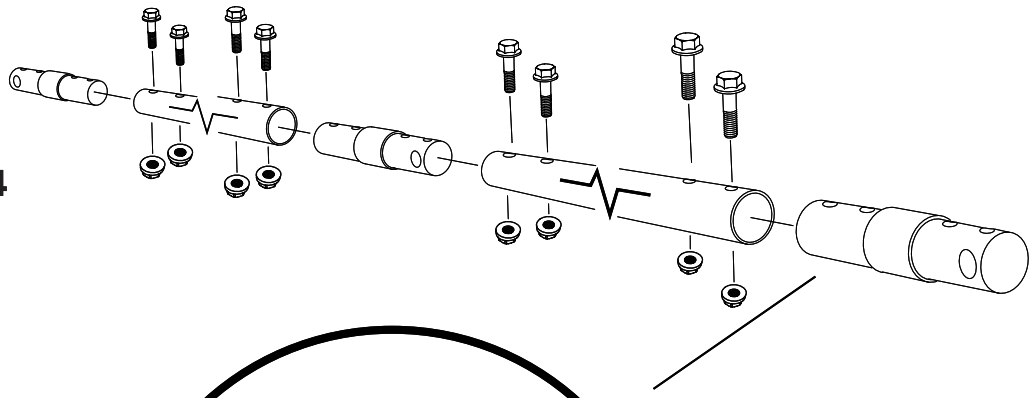

8

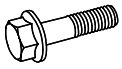

8 x – M10x50

8 x – M10

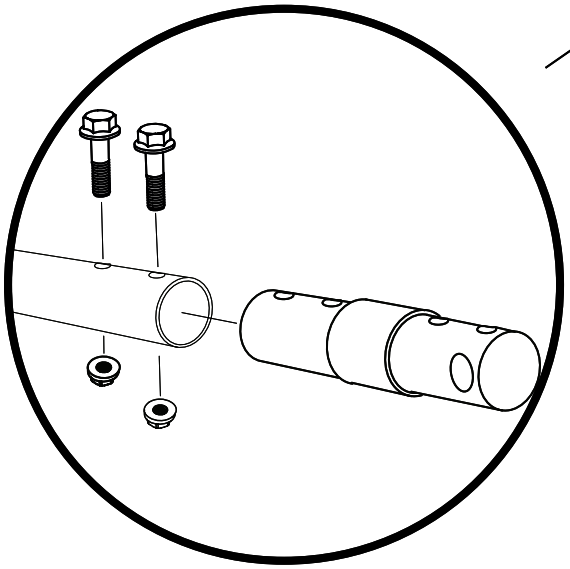

9

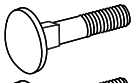

1 x – M10x130

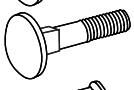

1 x – M10x110

2 x – M10

1x – 03-02843 (100mm)

2x – 03-02834 (23,5mm)

2x – 03-02842 (29,5mm)

1x – 03-02822 (83)mm

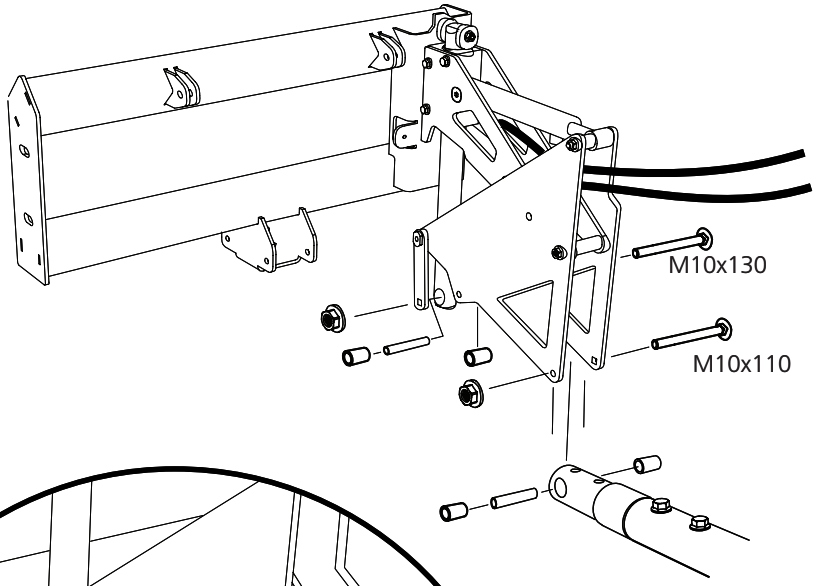

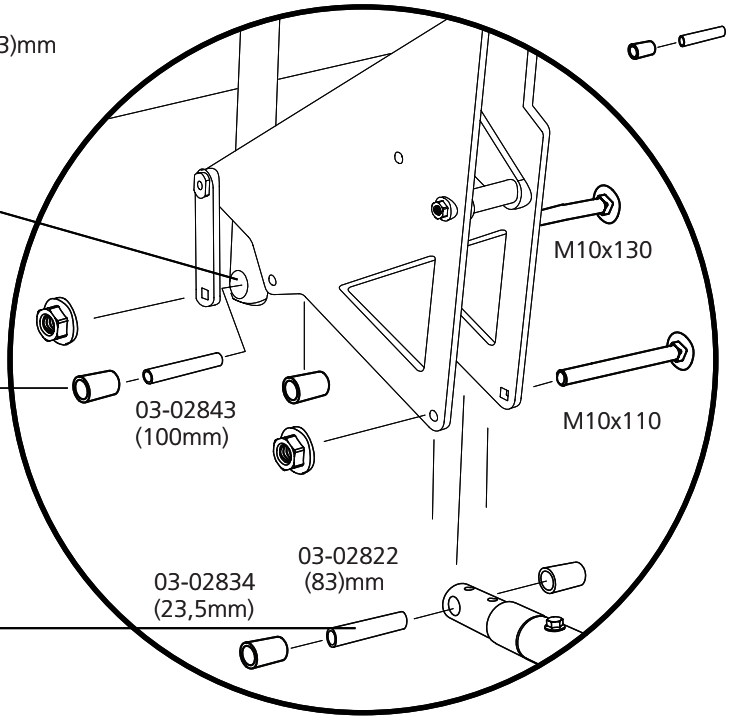

01-00627

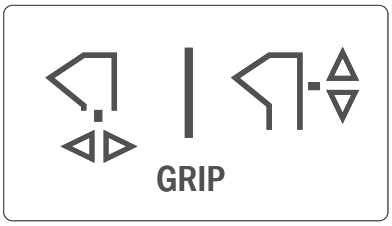

We recommend laying out all fasteners on a tray or similar to make the task easier.

To be able to mount new functions in the rails, it is important to release existing log beds in order to facilitate installation of the new functions.

Position 01-00627

The log beds are positioned on pipe number **4** viewed in the sawing direction. The log clamp is then placed on hole patterns **3** and **4** counted from the joint on the pipe in the sawing direction.

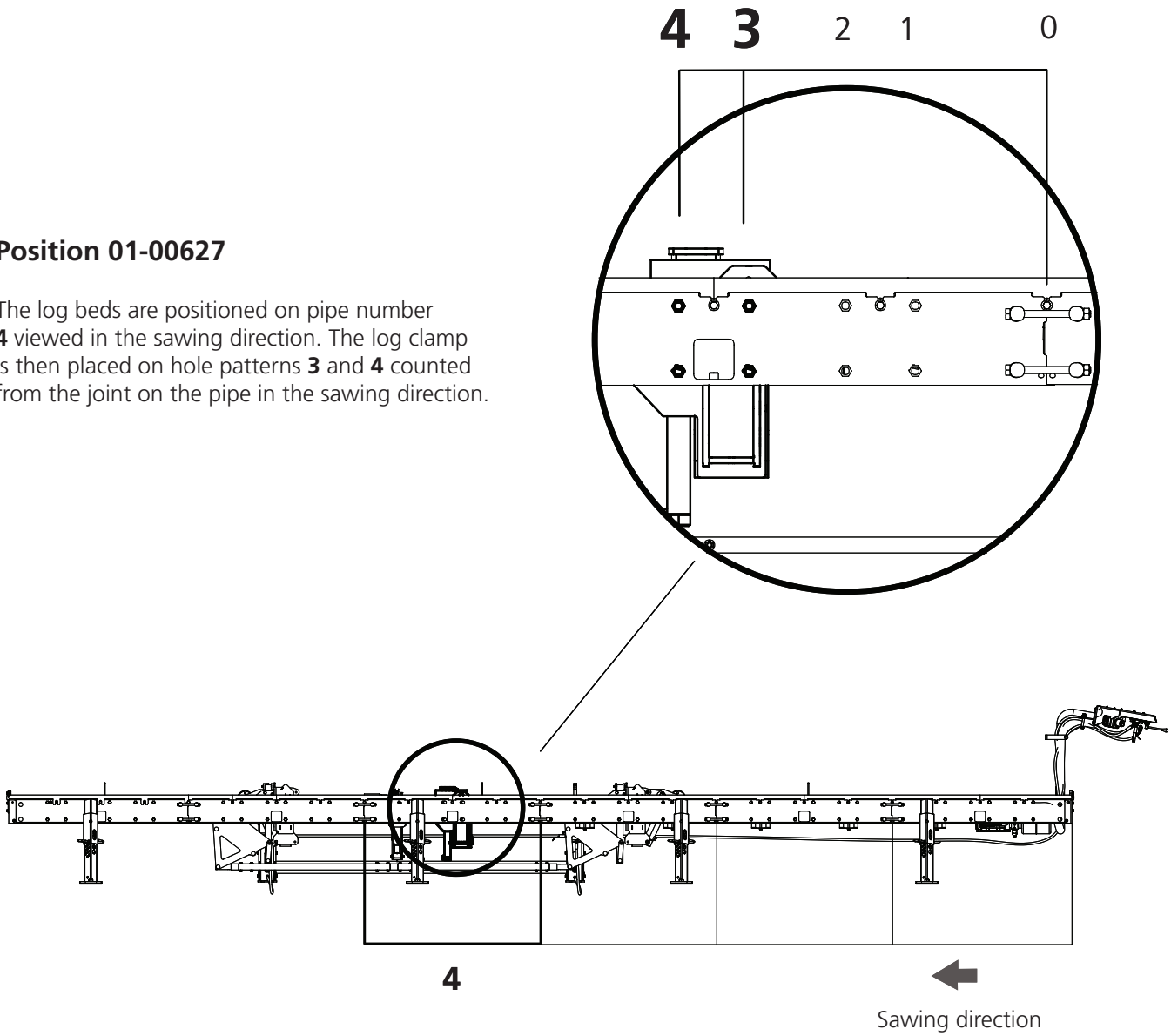

1

2 x – M12x30

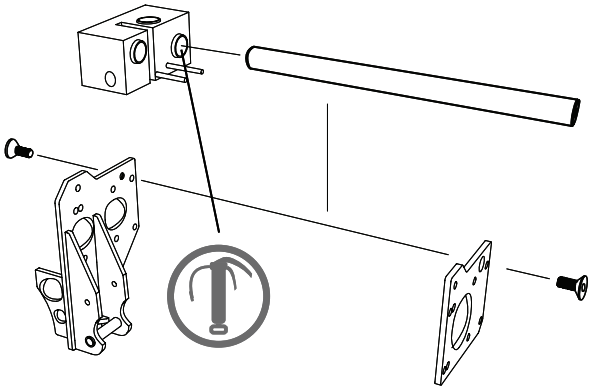

2

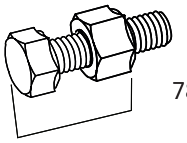

78,5mm

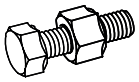

8 x – M12x100 +M12

8 x – M12

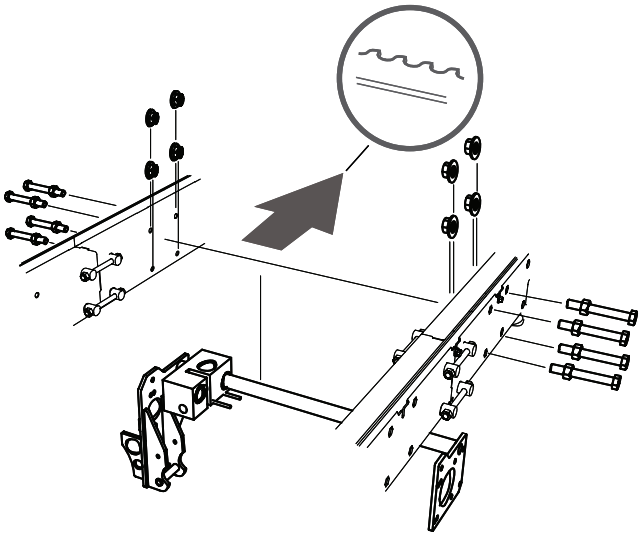

3

2 x – M12x30

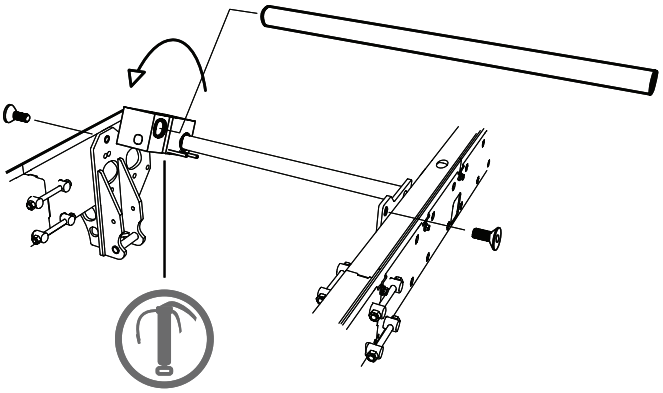

01-00627

4

1 x – M10x110

1 x – M10x140

2 x – M10

1x – 03-02868 (105mm)

1x – 03-02878 (77mm)

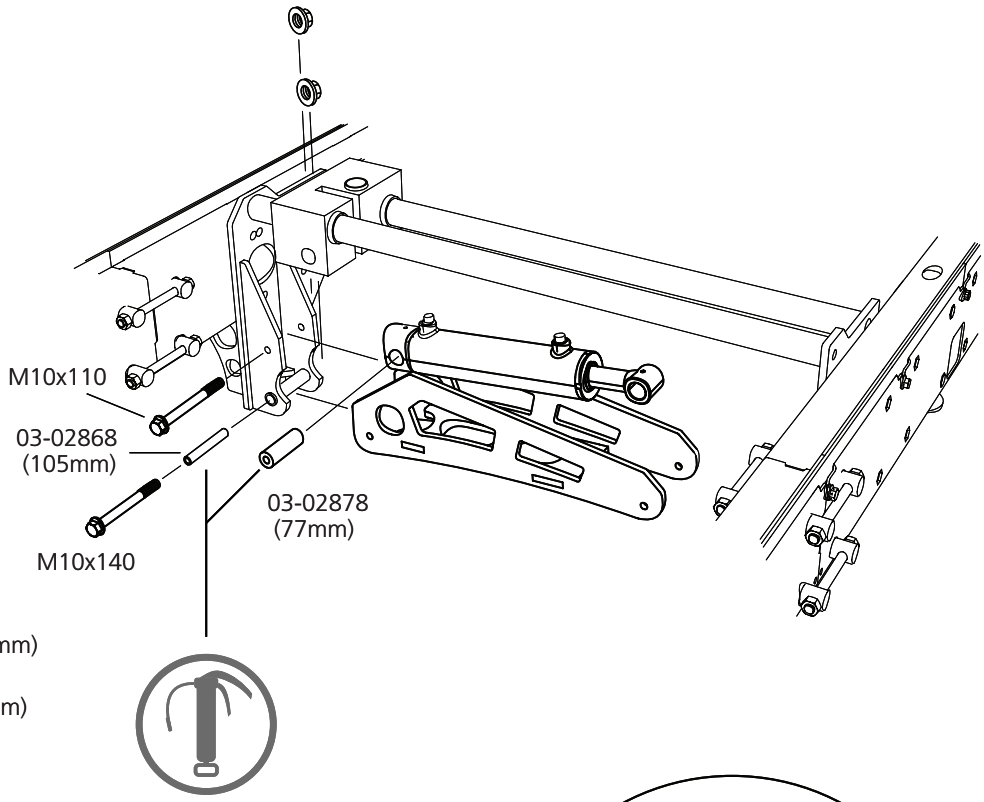

5

1 x – M10x100

1 x – M10x110

1 x – M10x140

3 x – M10

2x – 03-02878 (77mm)

2x – 03-02879 (35mm)

1x – 03-02868 (105mm)

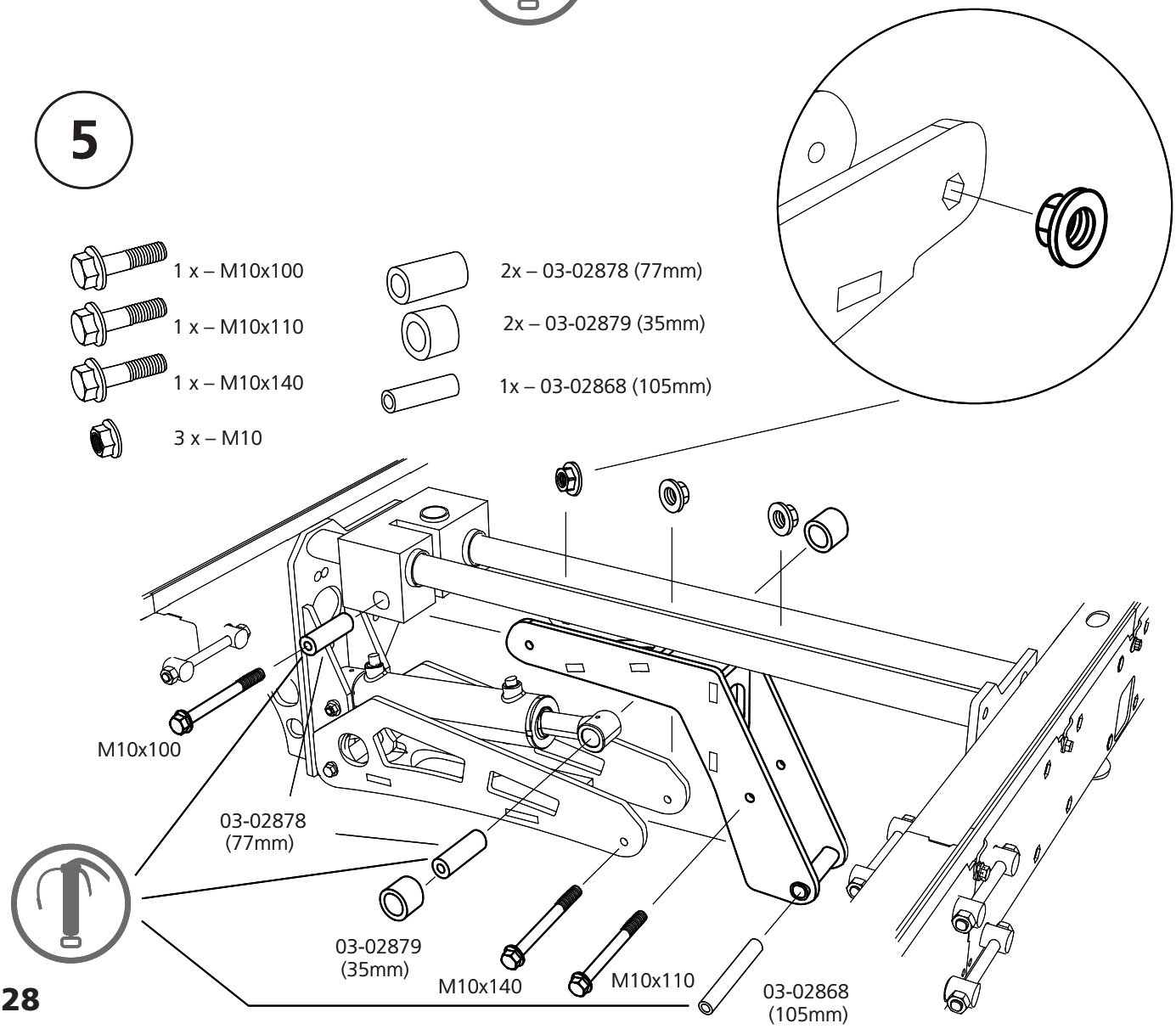

01-00627

6

2 x – M8

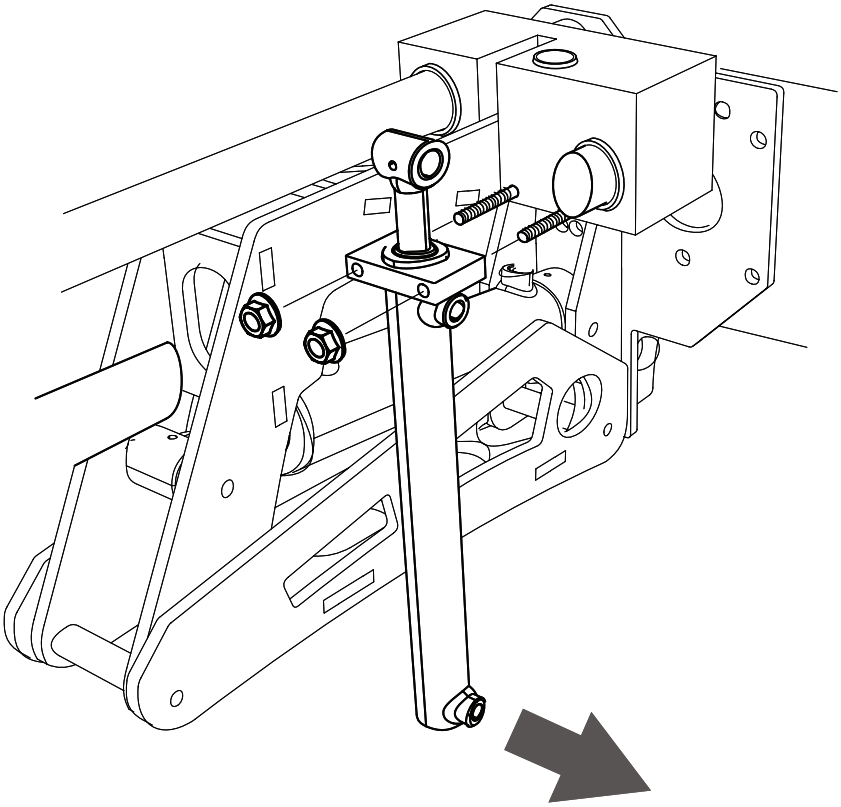

7

1 x – M12x30

1 x – M16x100

1 x – M16

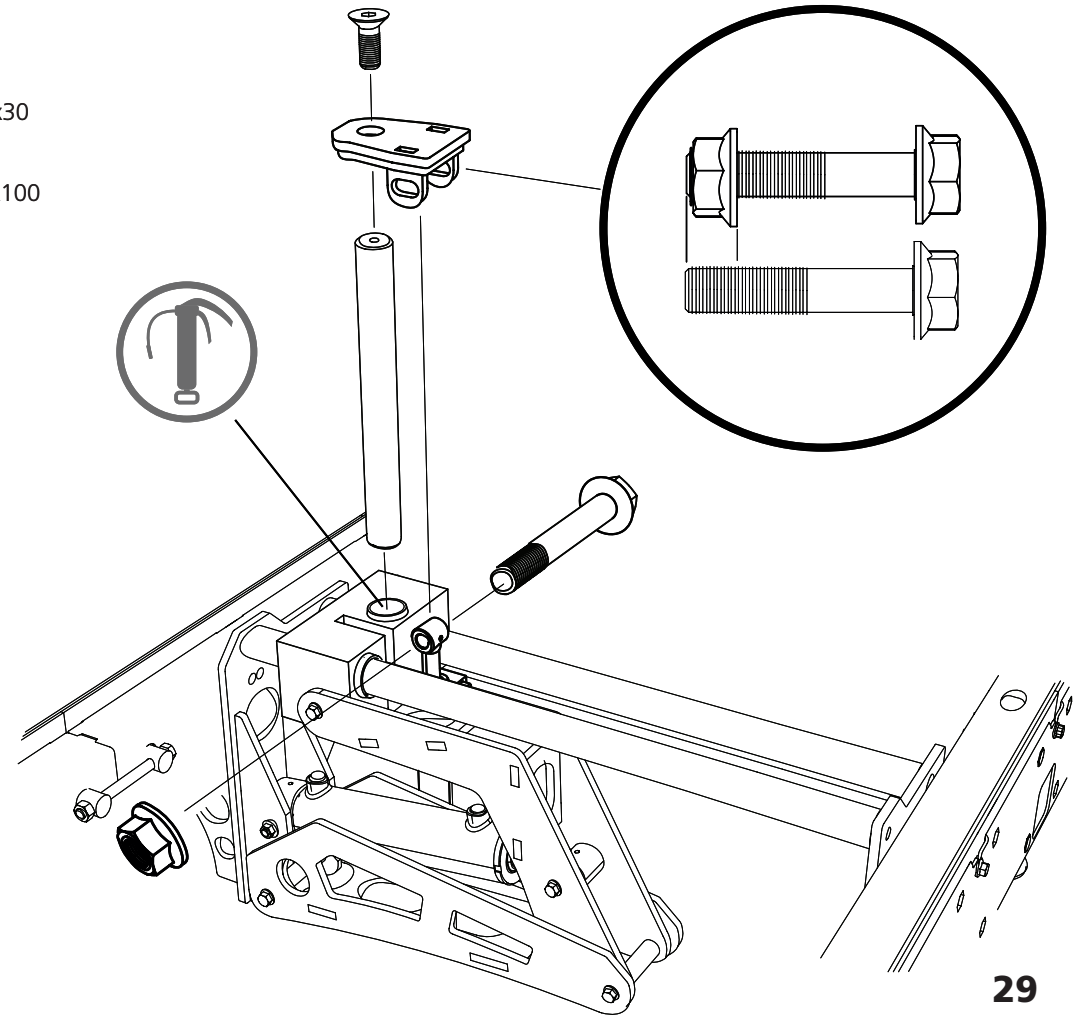

00-00102

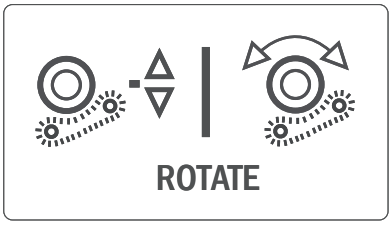

We recommend laying out all fasteners on a tray or similar to make the task easier.

To be able to mount new functions in the rails, it is important to release existing log beds in order to facilitate installation of the new functions.

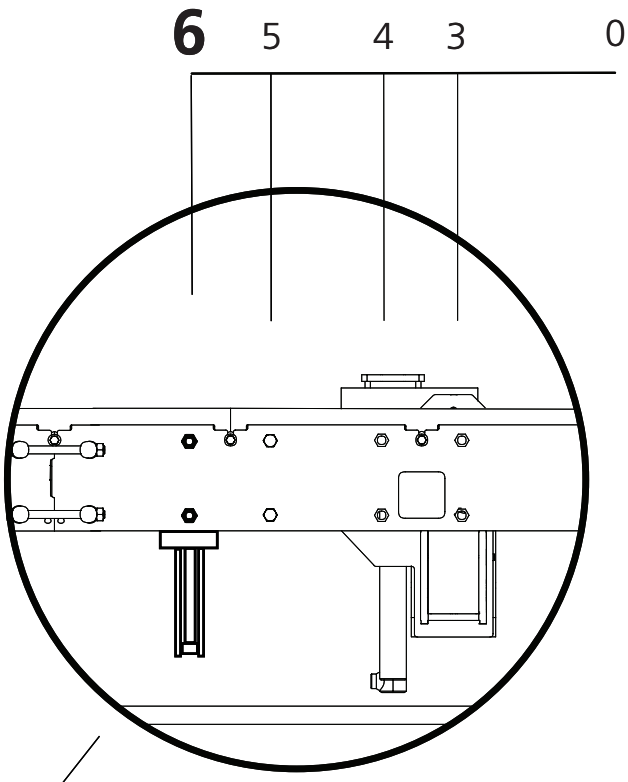

Position 00-00102

The log beds are positioned on pipe number **4** viewed in the sawing direction. The log beds are then placed on hole pattern **6** counted from the joint on the pipe in the sawing direction.

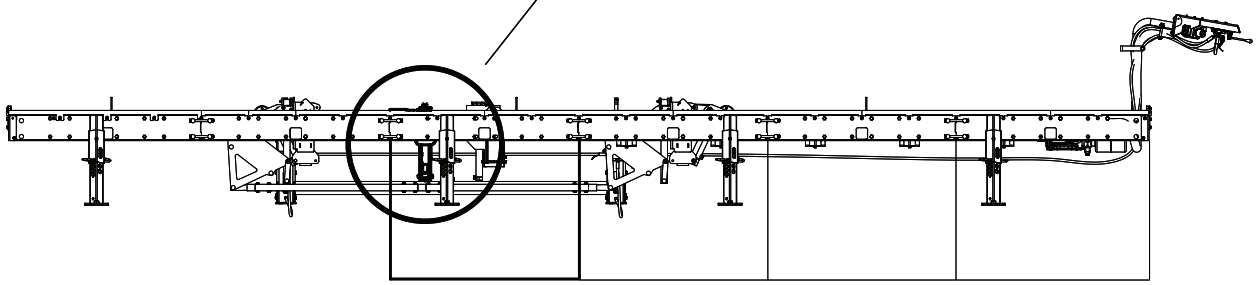

00-00102

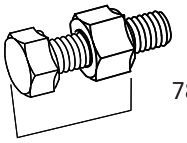

78,5mm

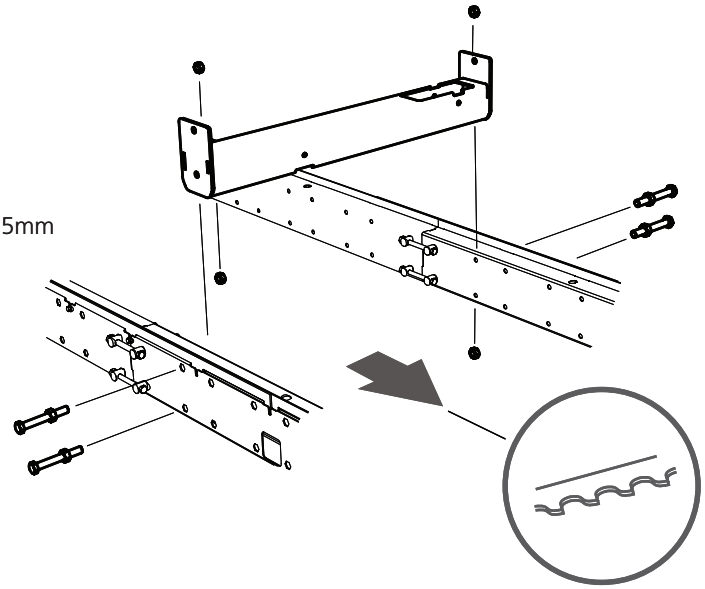

1

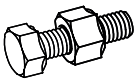

4 x – M12x100 +M12

4 x – M12

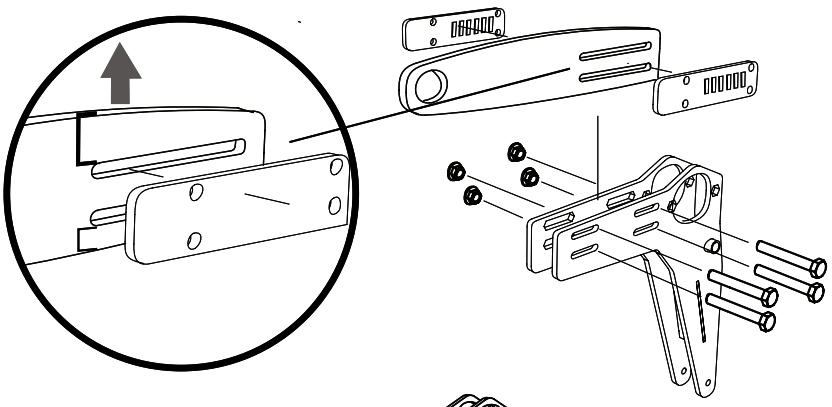

2

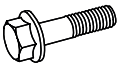

4 x – M10x70

4 x – M10

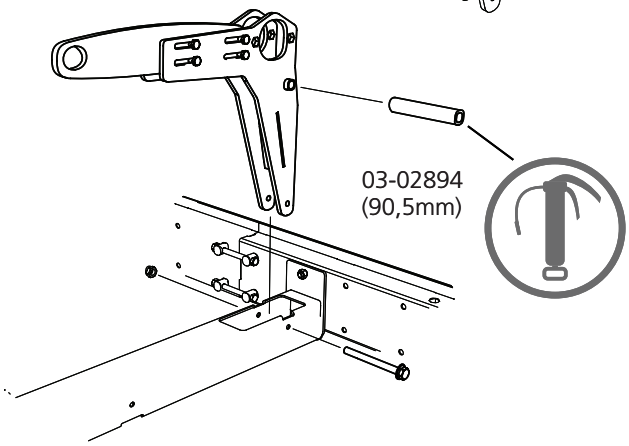

3

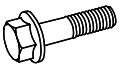

1 x – M10x110

1 x – M10

1x – 03-02894 (90,5mm)

4

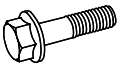

1 x – M10x110

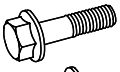

1 x – M10x75

2 x – M10

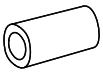

1x – 03-02878 (77mm)

1x – 03-02898 (46,5mm)

2x – 03-02898

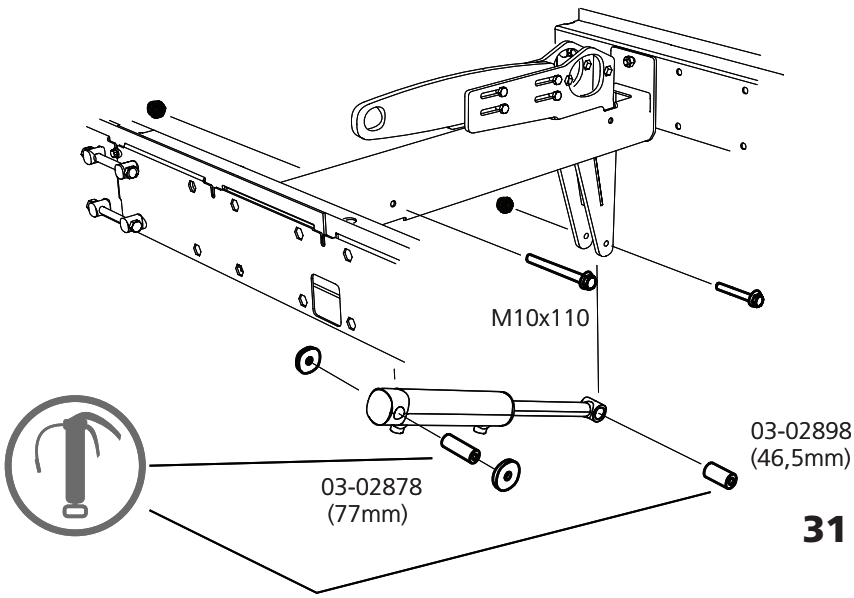

00-00102

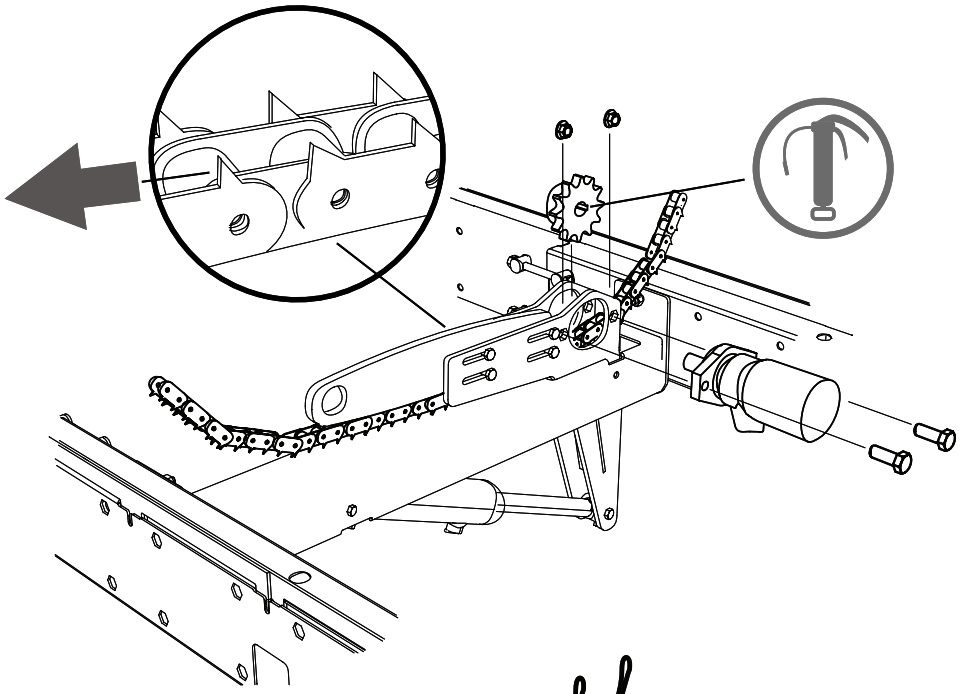

5

2 x – M12x30

2 x – M12

1x – 04-00437

04-00550 B751pro
04-00435

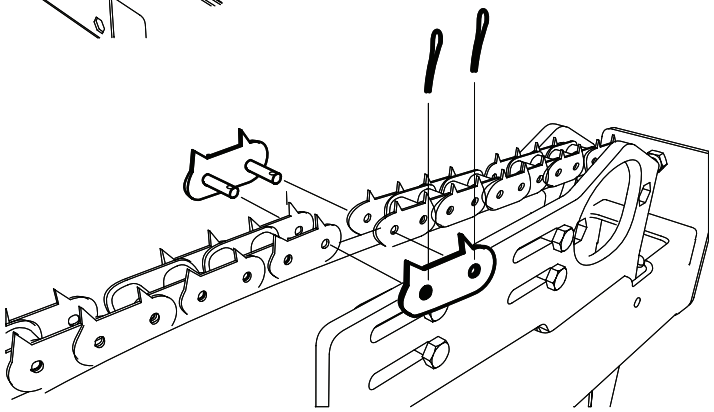

6

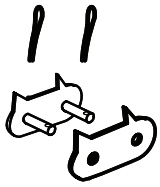

1x - 04-00554

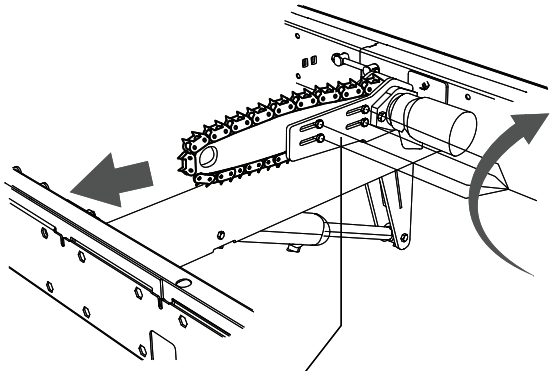

7

Adjusting chain tension

Adjust the chain tension by releasing the screws holding the guide bar, then tighten the chain using a chisel or a breaking bar. Then re-tighten the screws.

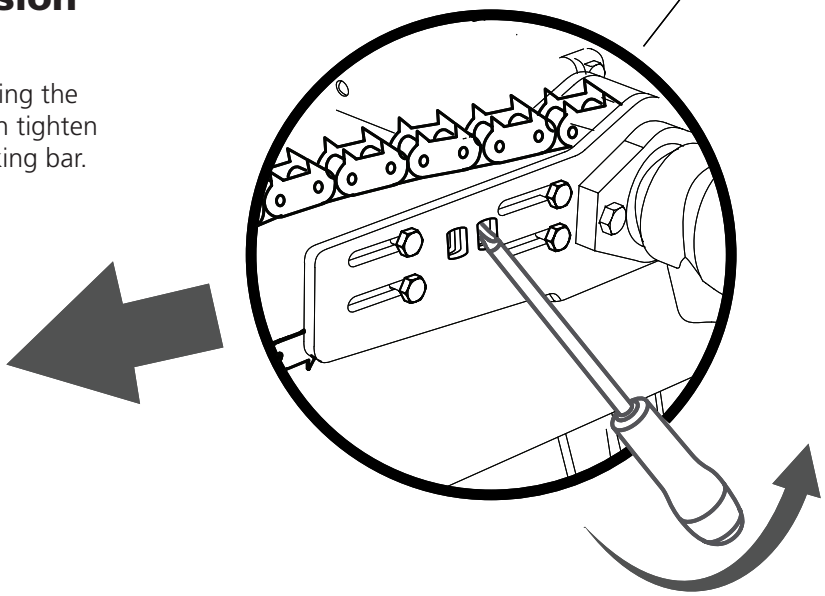

8310-001-0205

LOAD

Position 8310-001-0205

The log loaders are positioned on pipes number **3** and **5** viewed in the sawing direction.

Count the hole patterns from the pipe joint.

We recommend laying out all fasteners on a tray or similar to make the task easier.

To be able to mount new functions in the rails, it is important to release existing log beds in order to facilitate installation of the new functions.

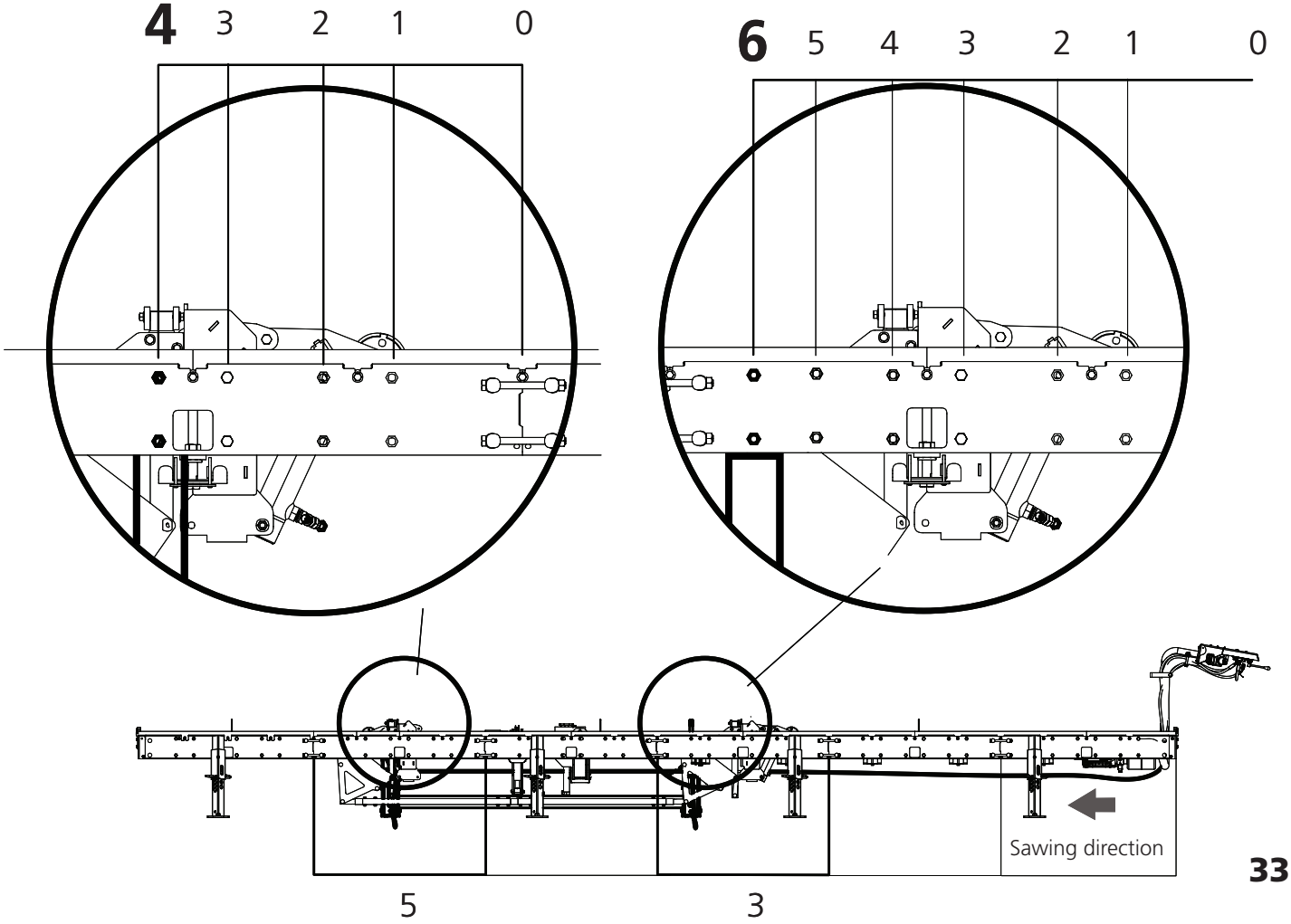

8310-001-0205

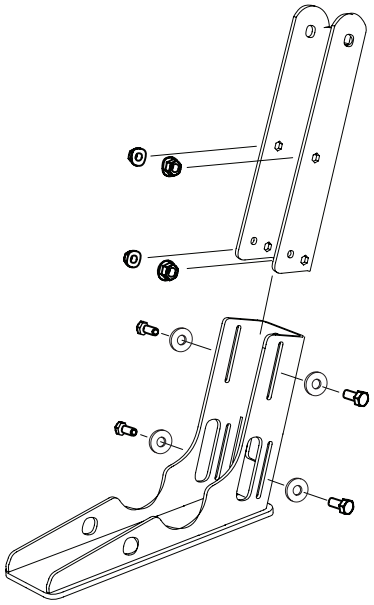

1

4 x – M10x20

4 x – M10

4 x – M10

2

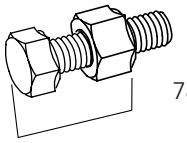

78,5mm

4x – M12x100

2 x – M12x100 +M12

2 x – M12

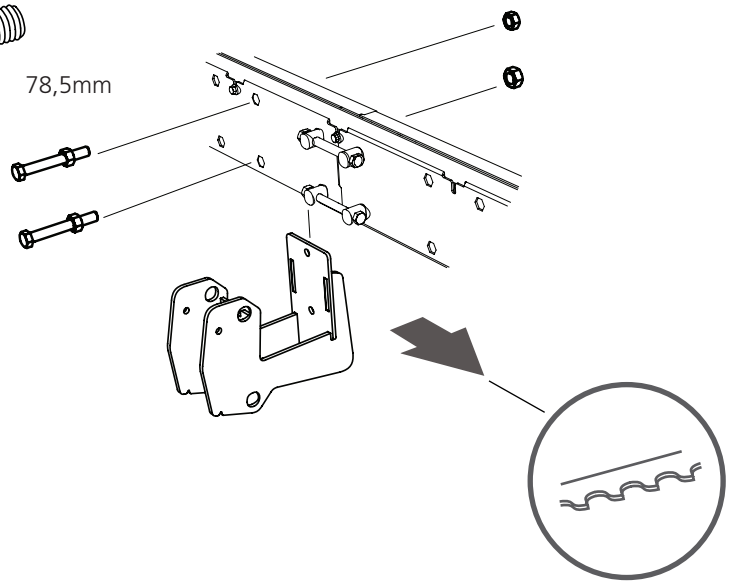

3

1 x – M12x130

1 x – M12

1 x – M12

1x – 03-03094 (97mm)

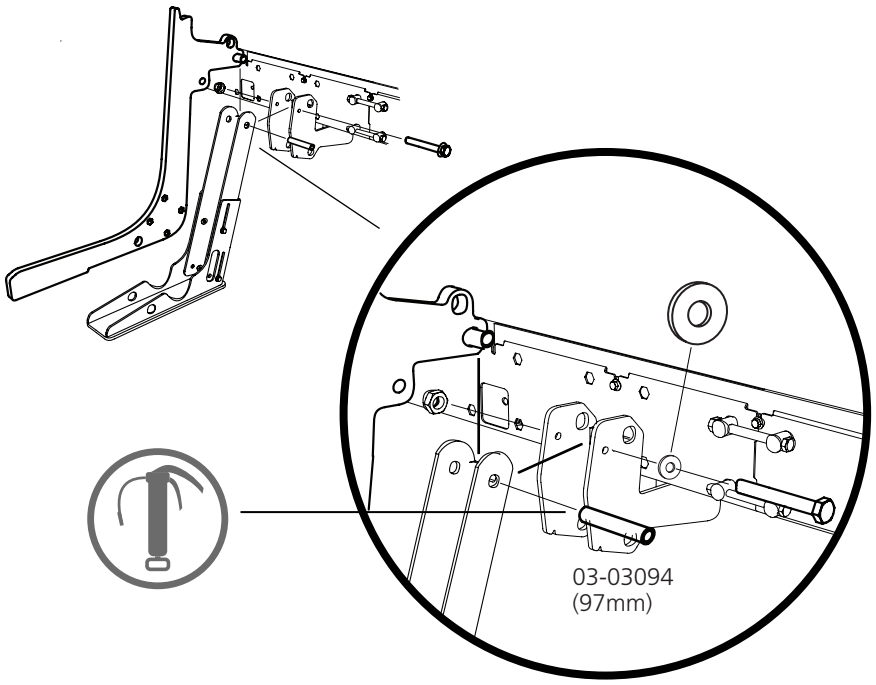

8310-001-0205

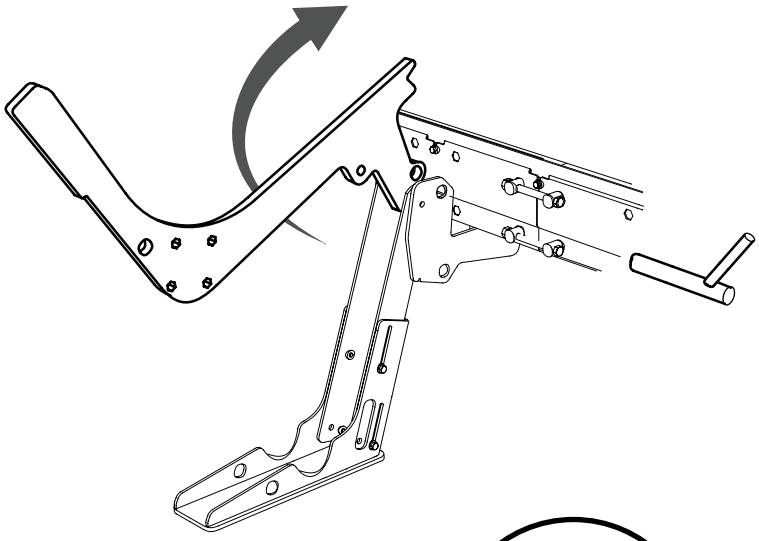

4

5

04-00468

1 x – M12x110

1 x – M12

1 x – M12

1x – 03-03105 (78mm)

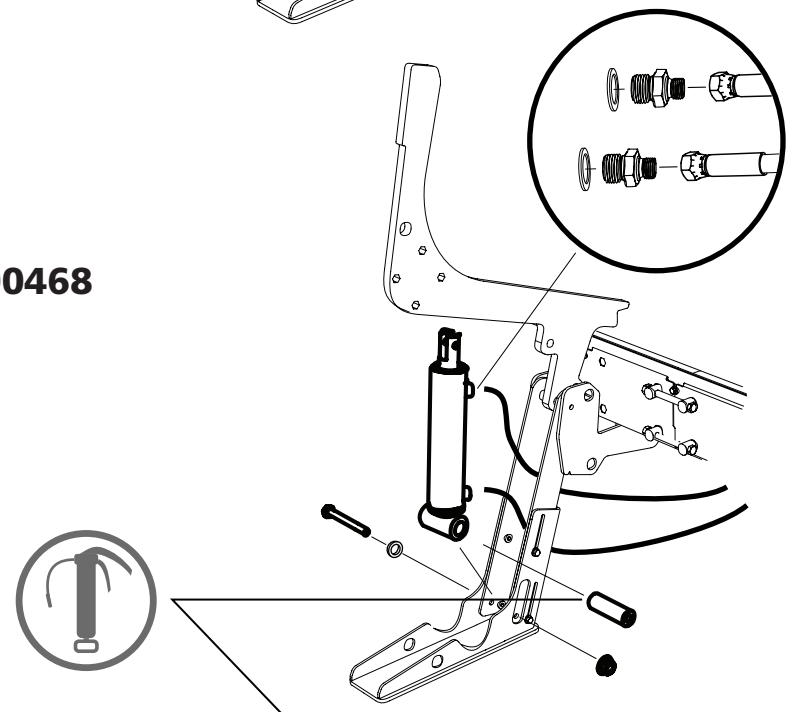

6

1 x – M12x55

1 x – M12

1x – 03-03102 (21,8mm)

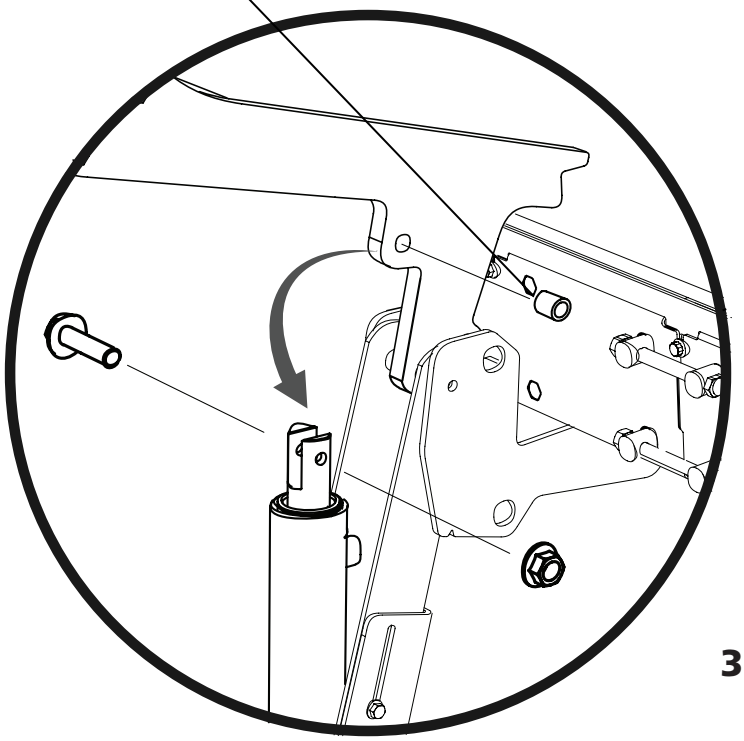

8310-001-0205

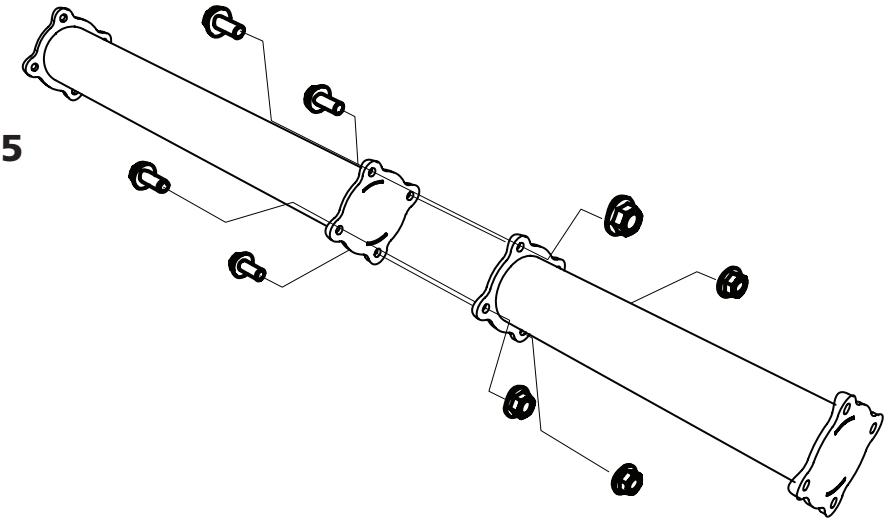

7

4 x – M10x25

4 x – M10

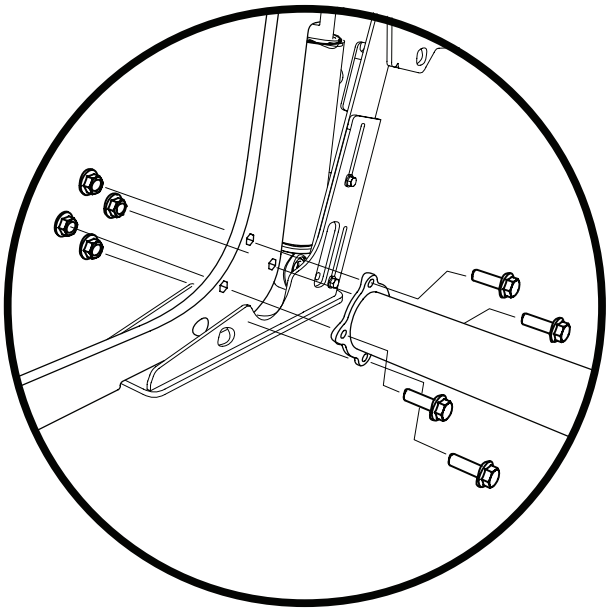

8

4 x – M10x30

4 x – M10

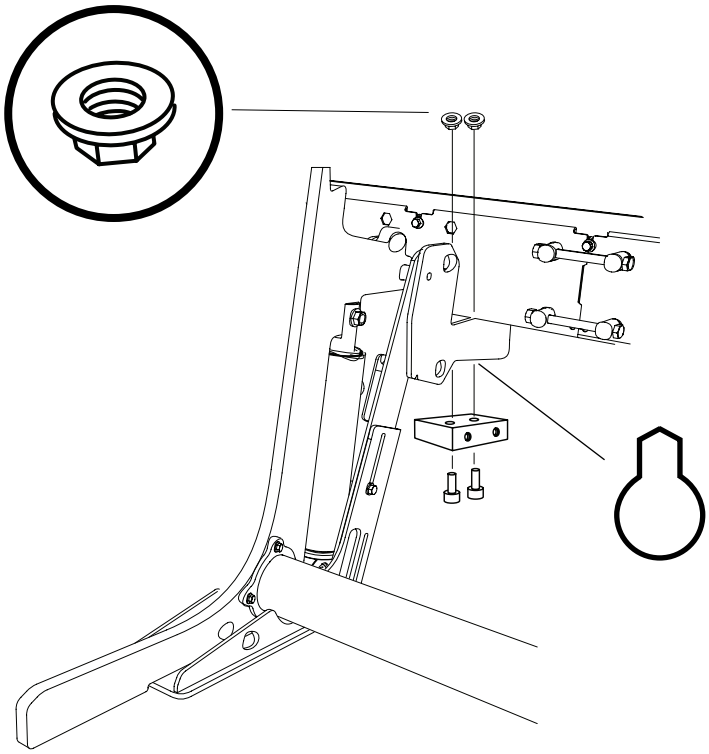

9

4 x – M8x40

4 x – M8

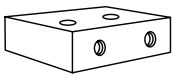

2 x

01-00560

POWER UNIT

To start the next step, the parts from the packages are needed. **01-00560.** We recommend laying out all fasteners on a tray or similar to make it easier to find screws.

To be able to mount new functions in the rails, it is important to release existing log beds in order to facilitate installation of the new functions.

1

4 x – M10x25

4 x – M10

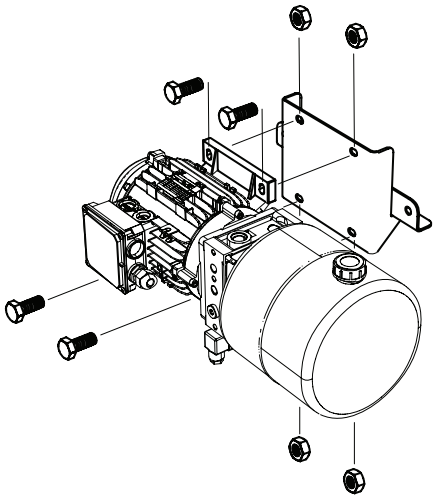

2

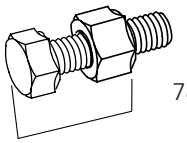

2 x – M8x20

1 x – M12x90 +M12

1 x – M12

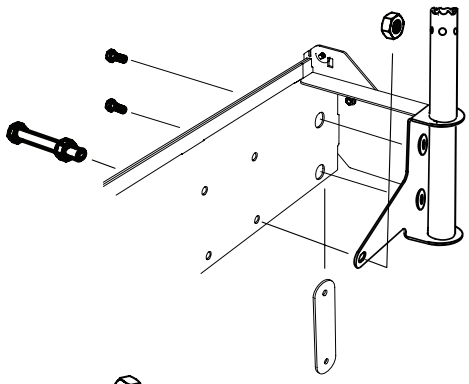

3

2 x – M12x90 +M12

2 x – M12

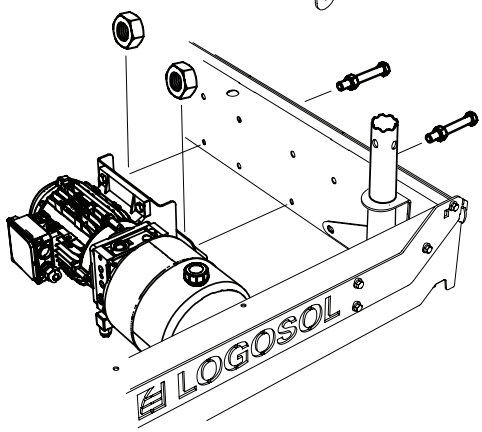

01-00718

PETROL UNIT

1

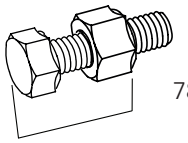

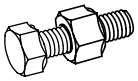

3 x – M12x100 +M12

2 x – M12

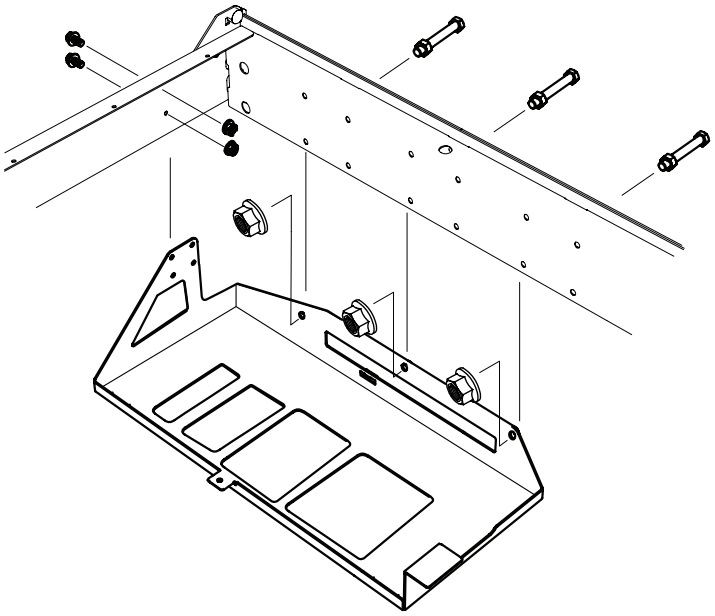

2

1 x – M8x20

1 x – M8

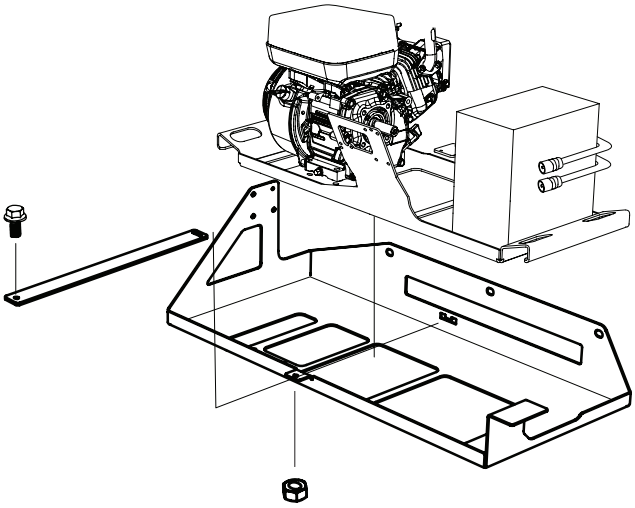

01-00560

CONTROL PANEL

OPERATOR ARM

1

2 x – M8x20

1 x – M12x100 +M12

1 x – M12

78,5mm

2

4 x – M6x16

4 x – M6

3

6 x – M8x14

4 x – M4

4 x – M4

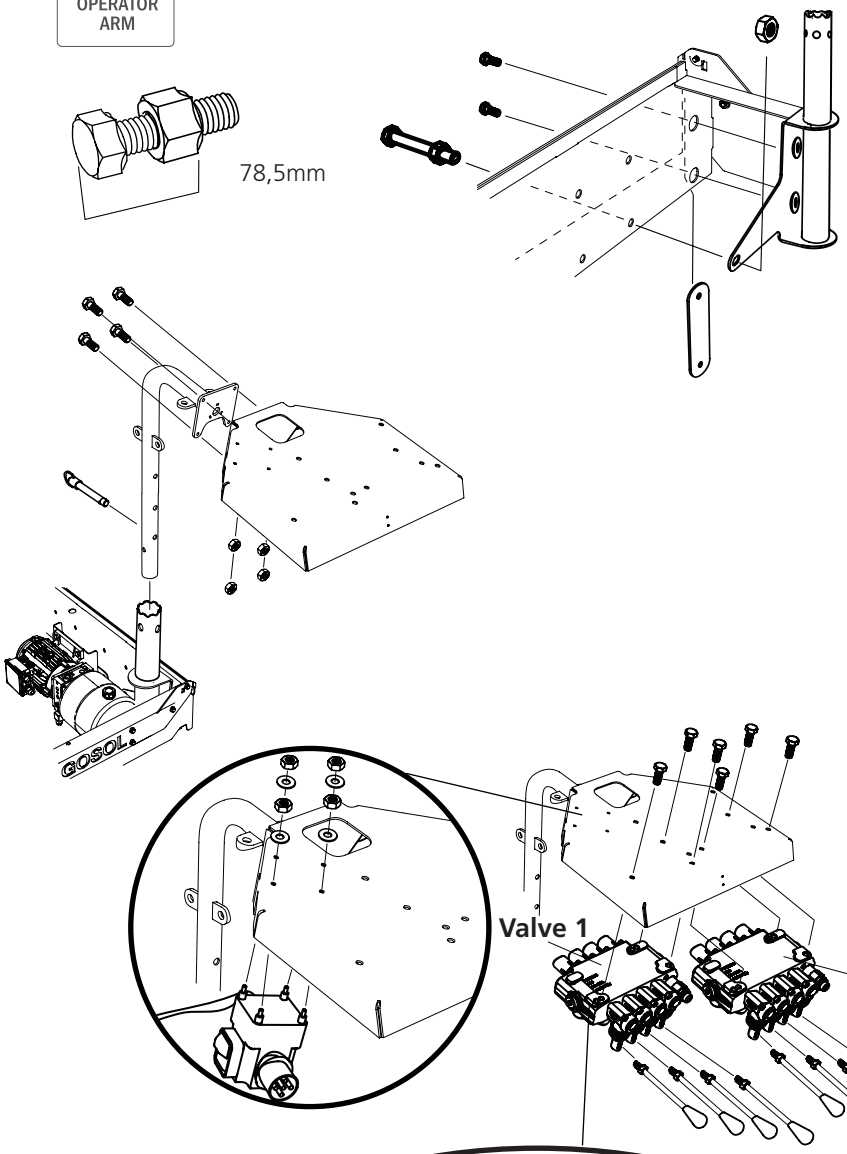

Plugs in ports

To pair the valves, a steel plug in port T:2 must be removed from valve 1. Unscrew the steel plug (1) and unscrew the carryover plug (2), then screw the steel plug back into port T:2. Check that all sealing surfaces are clean before tightening.

Remove the plastic paintwork covers from the levers.

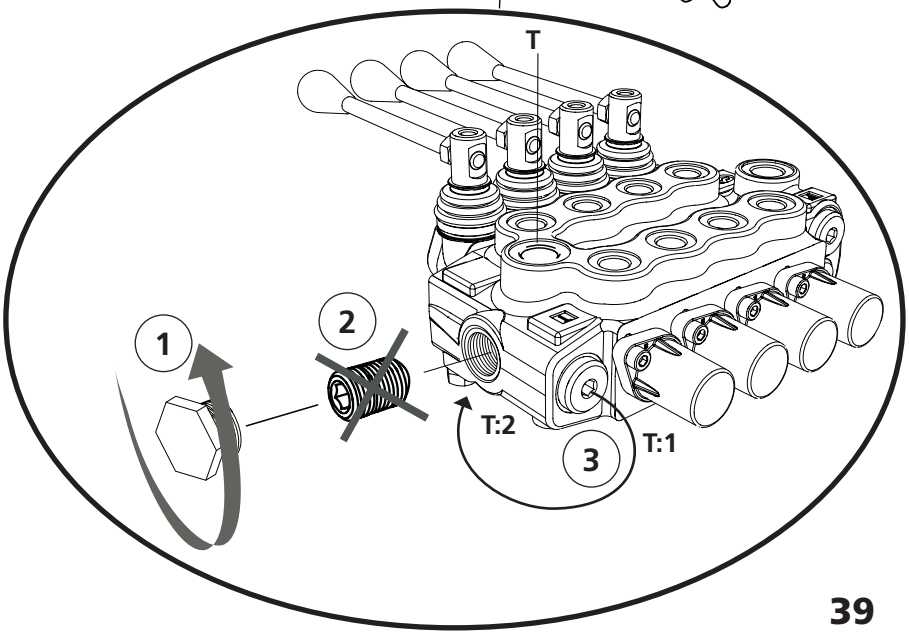

CONNECTING THE UNIT AND PAIRING THE VALVE

Remove the plastic plug on the pump, tank and work ports wherever the hose is fitted.

Position of functions on the valve

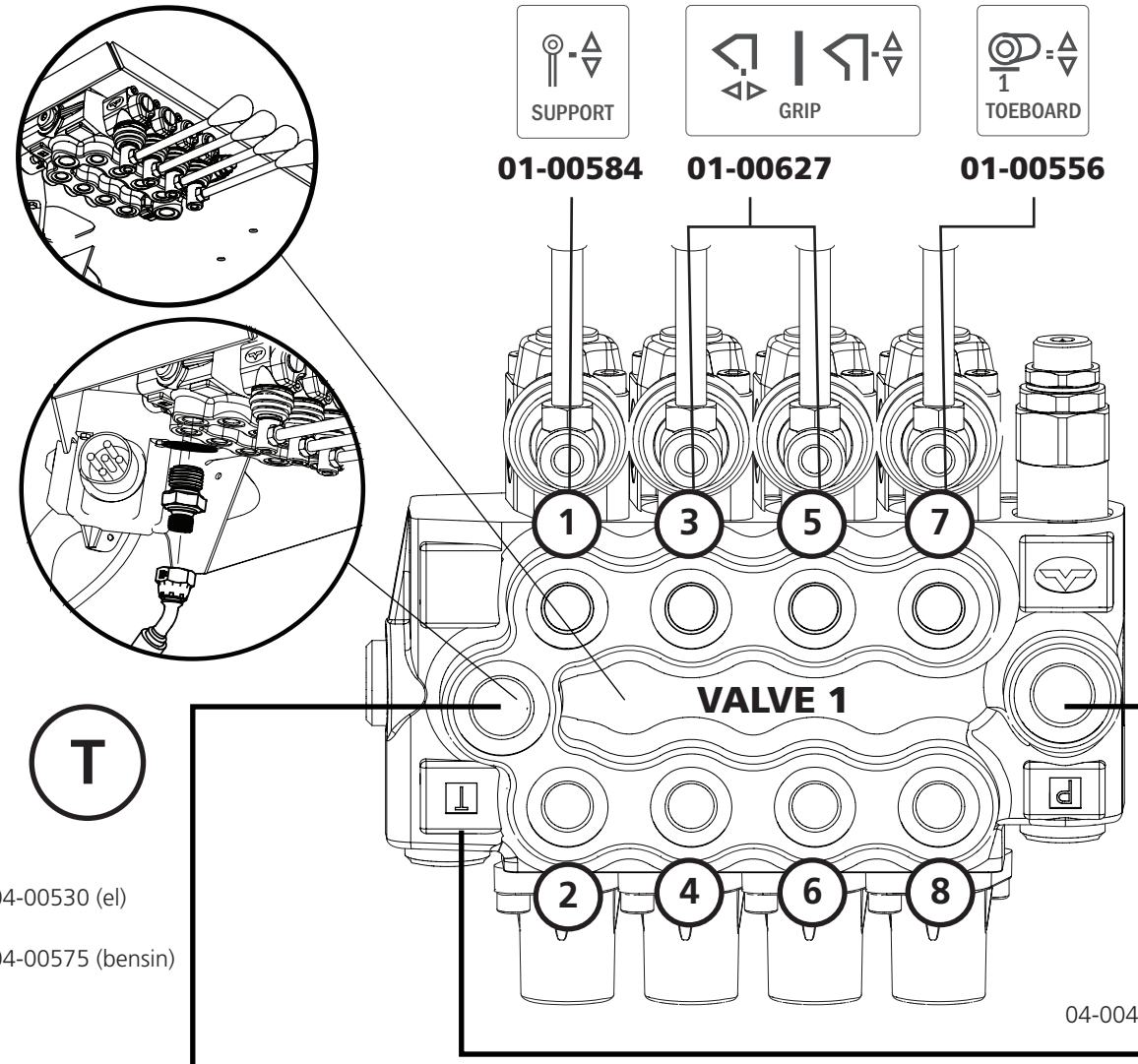

T

04-00530 (el)

04-00575 (bensin)

Power unit
01-00560

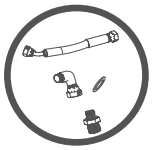

1x - 04-00439 (04-00530 included)

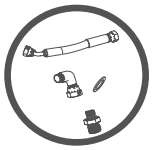

Pairing of valves

1x - 04-00444

(04-00483, 04-00482 included)

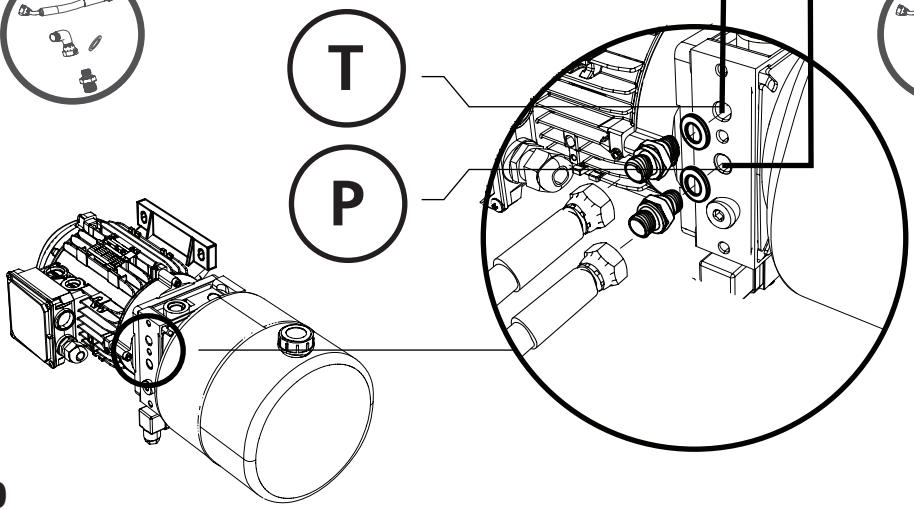

NB! Ports 7 and 8 on valve 2 have to be plugged using a 1/4" steel plug unless the log loader (8310-001-0205) is used.

Position of functions on the valve

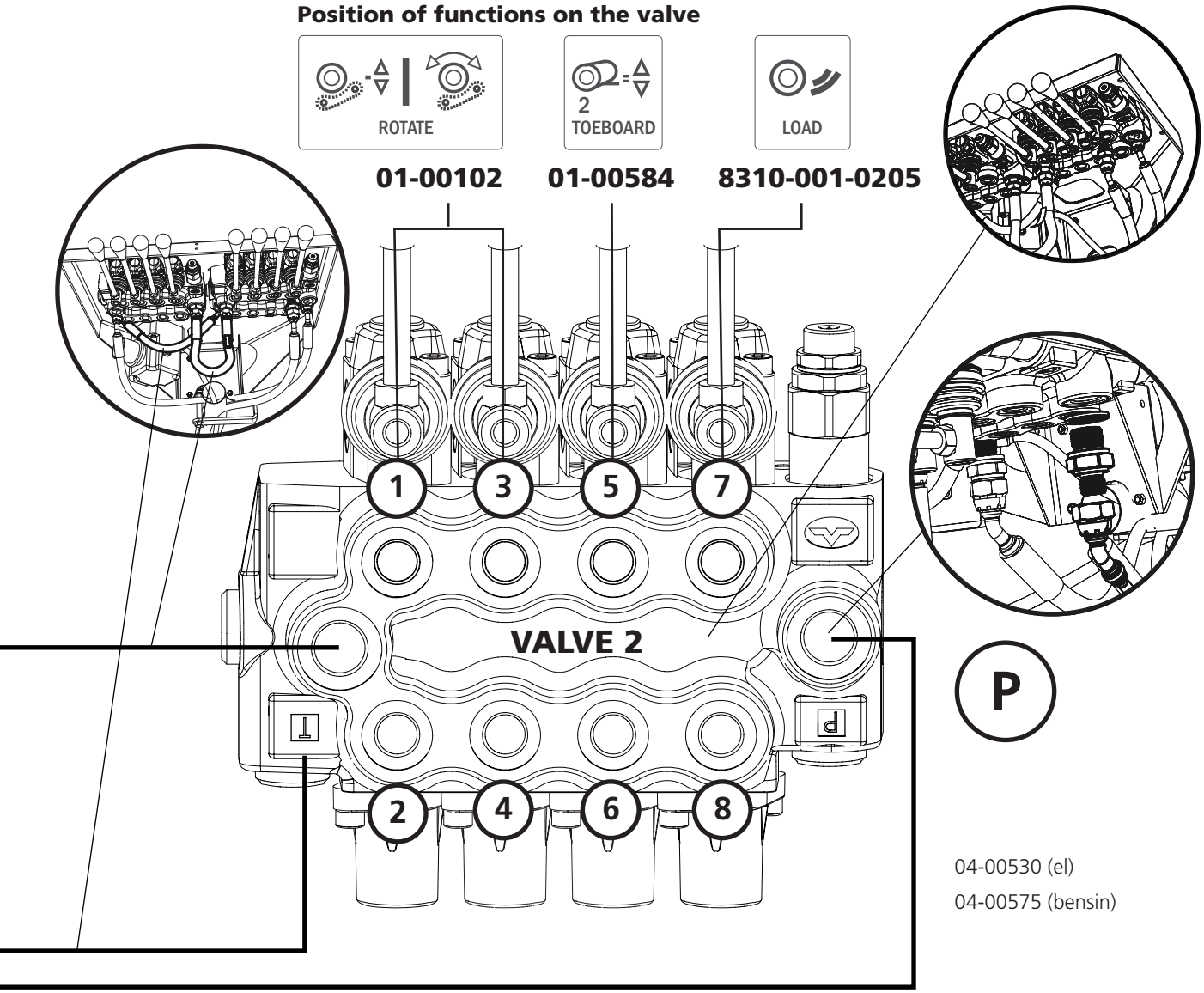

04-00530 (el)

04-00575 (bensin)

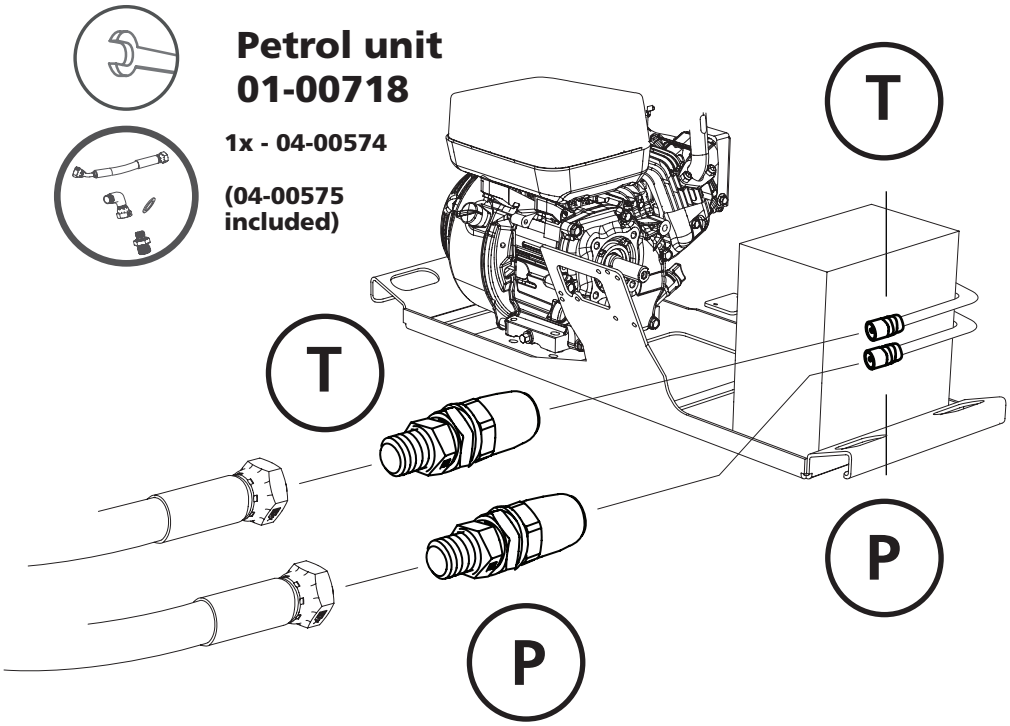

CONNECTING THE HOSE

Connection T/P petrol unit

The petrol unit has quick couplings on the P/T, mount the quick couplings on the pump and tank hoses and connect it into the petrol unit. The connection in the valves is the same for both units.

Stickers

Place the stickers for the functions in the relevant locations on the control panel.

1x – 080-828-021-0070

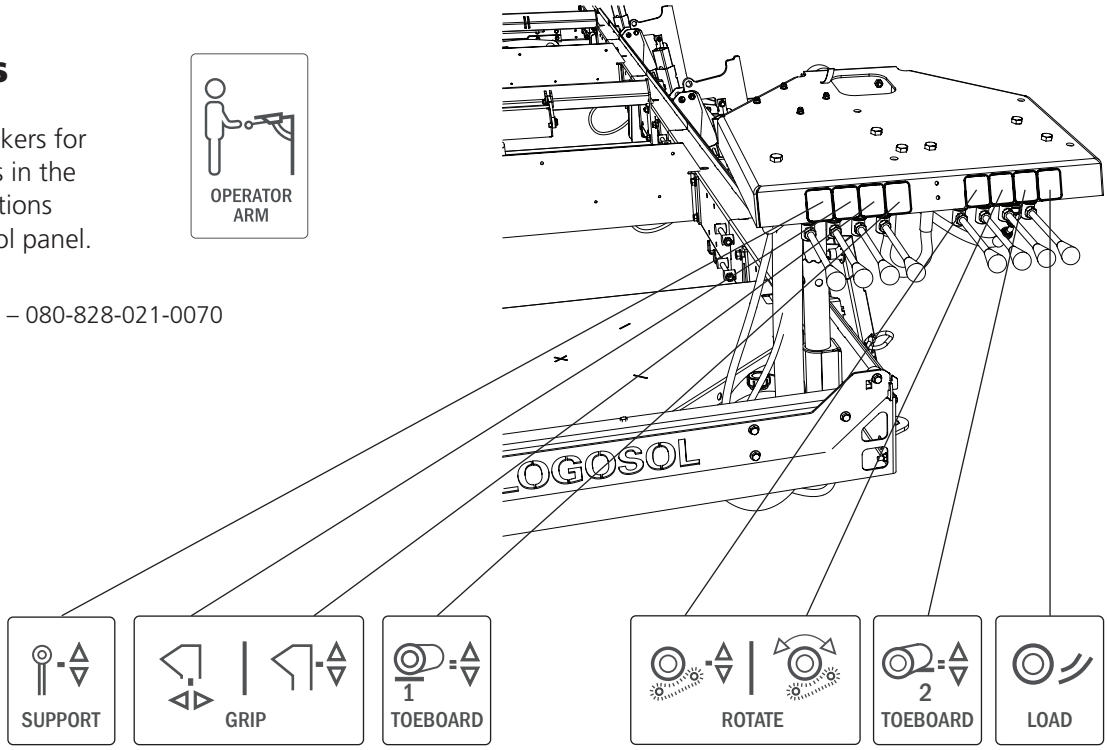

VALVE BLOCK

Hydraulic cylinders

To facilitate connection of the hydraulic cylinders, we define the connections as piston side and rod side.

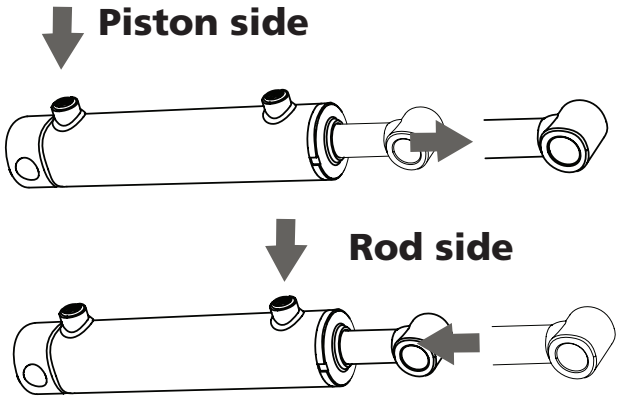

Connecting hydraulic cylinder

Logosol recommends connecting the piston connections from the hydraulic cylinders on the piston side of the valve block.

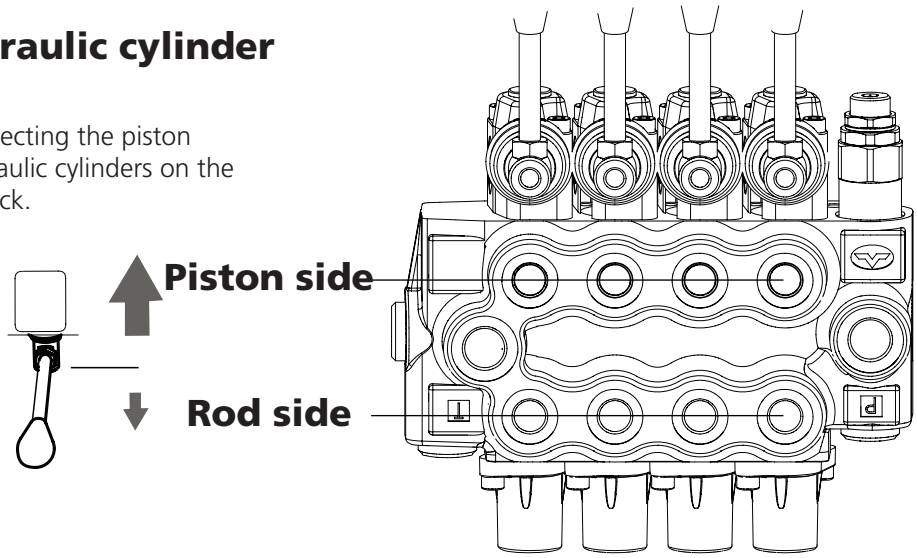

Connecting hydraulic cylinders

Fit the hoses onto the hydraulic cylinder. Note the location of the respective hose on the cylinder and valve. The hoses connected to the piston side of the cylinder shall be connected to the piston side of the valve.
Note the illustration showing the side of the sawmill into which the hoses should be installed for each function.

Then perform the procedure on the other functions based on the respective instruction.

Double-check that all connections are properly tightened before starting work on the first start-up of the machine.

Warning! Cuts. Never handle pressurized hydraulic hoses, oil from a pressurized hose can penetrate the skin and cause serious injury.

Do not lift or handle hydraulic equipment connected to the hoses or couplings.

Handle hydraulic hoses and couplings carefully during assembly and maintenance work. Avoid sharp bends on hydraulic hoses. Sharp bends damage the hoses and increase the risk of breakdown. Check that there is enough hose for the movement of the function.

Connection angle

the illustration shows the connection angle of the hoses for each function in top view.

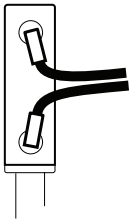

01-00584

1x - 04-00539

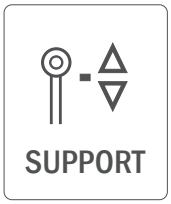

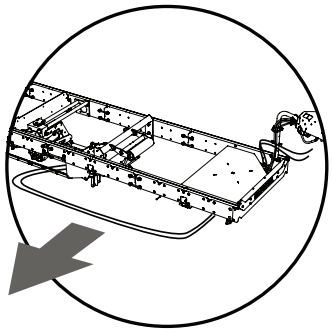

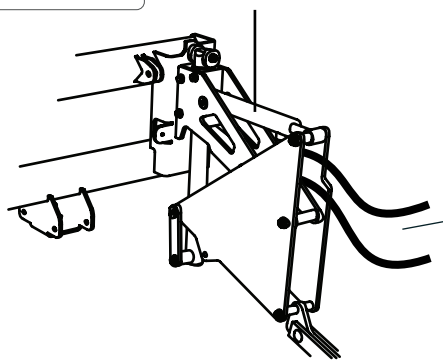

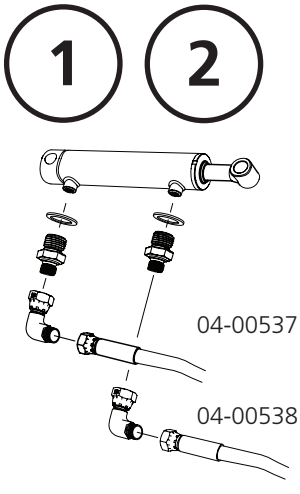

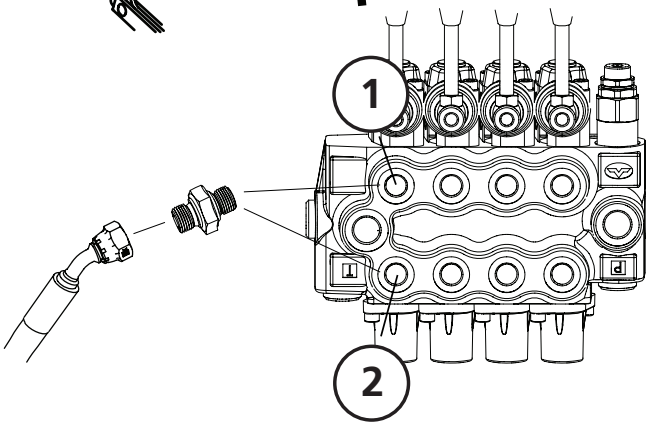

Position of hydraulic hose

The illustration shows the side of the saw bed to which the hoses should be installed for each function.

01-00627

GRIP

1x - 04-00441
1x - 04-00442

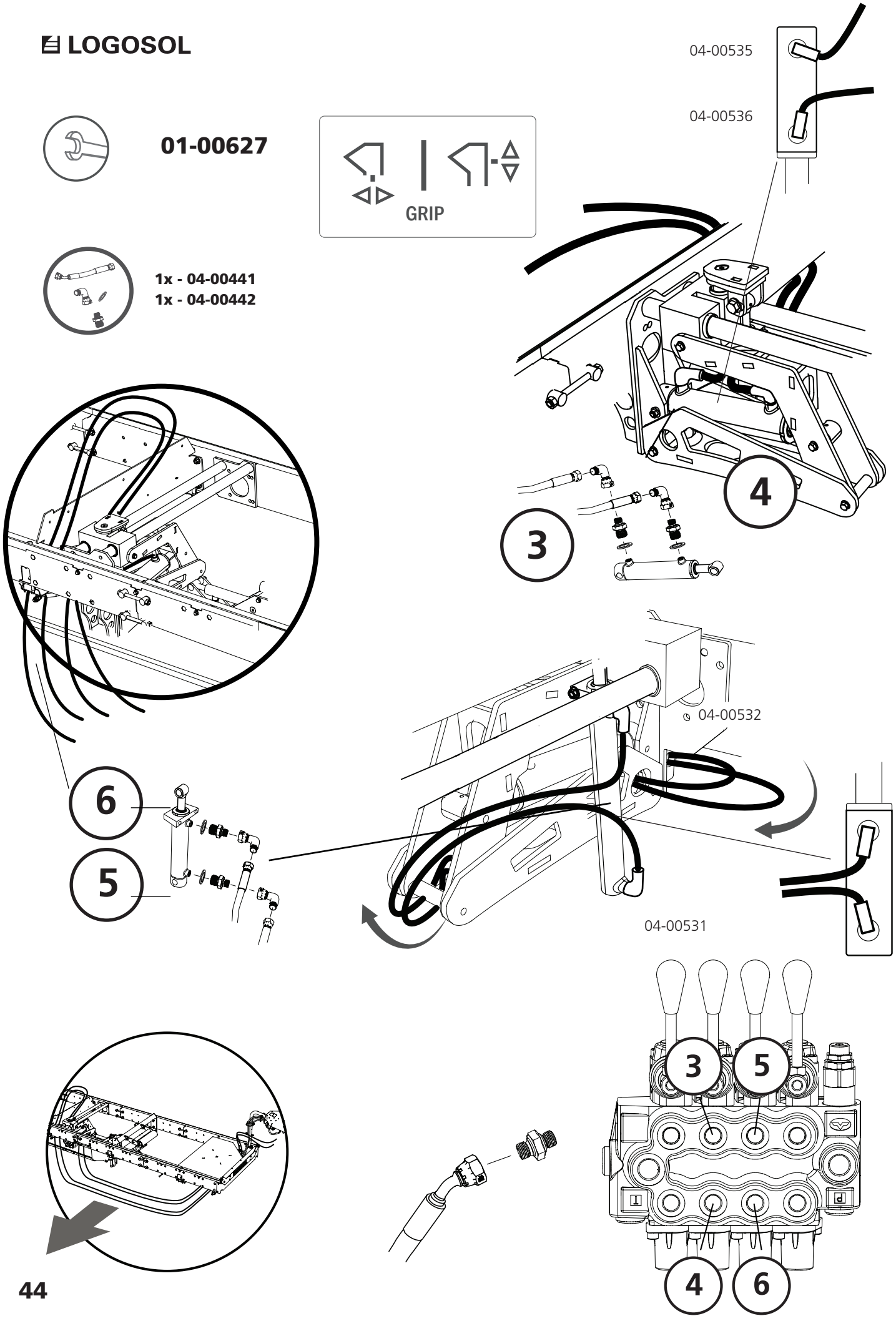

01-00584

04-00440

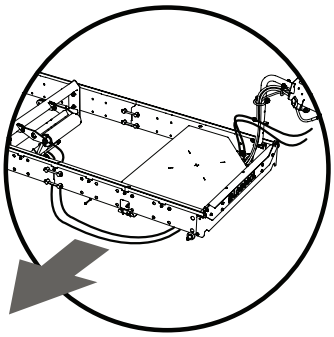

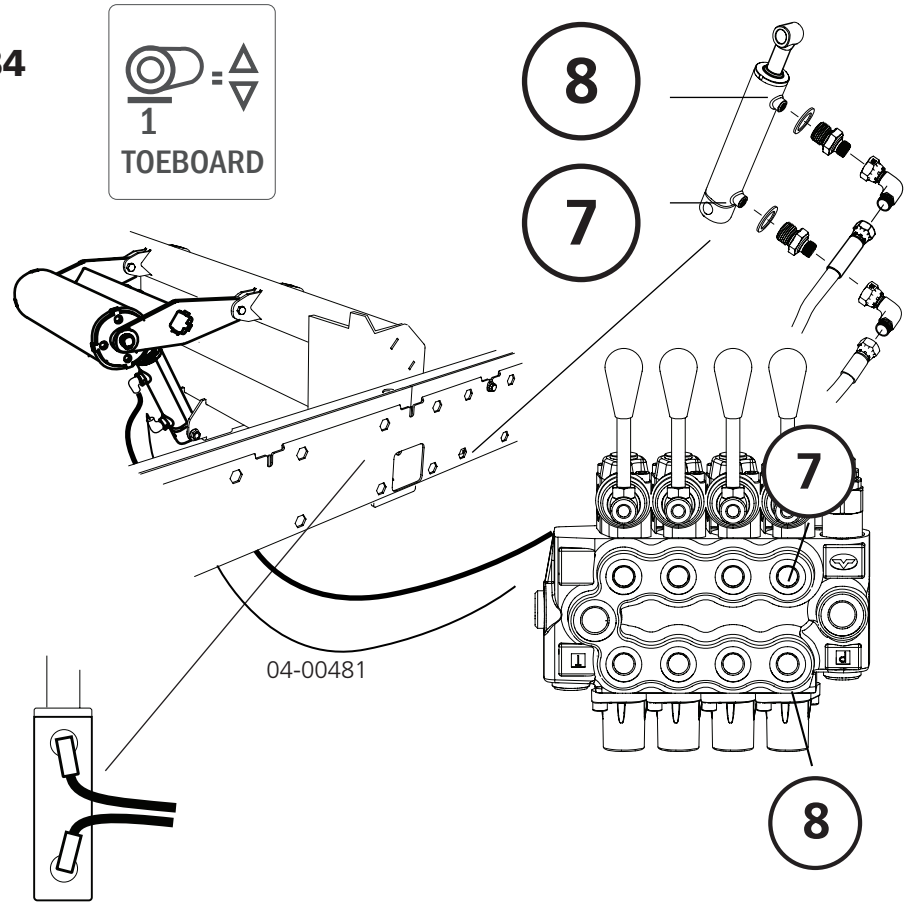

01-00102

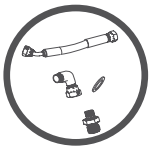

04-00474
04-00477

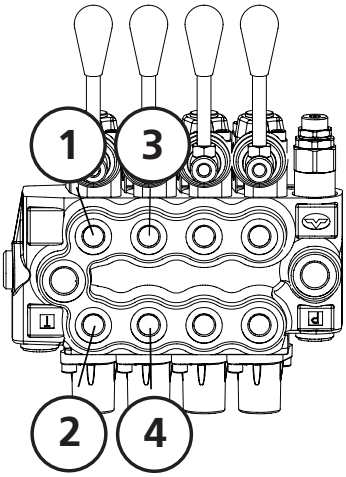

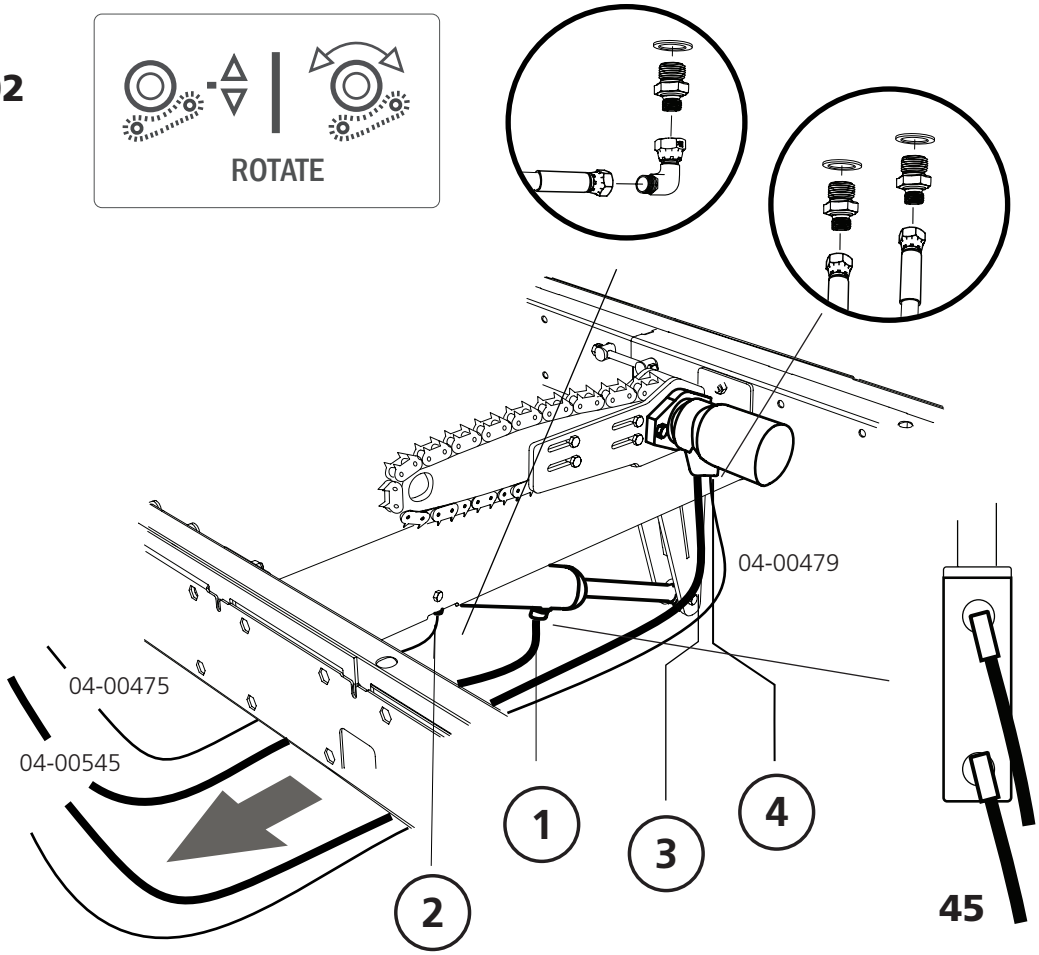

LOGOSOL

01-00584

04-00478

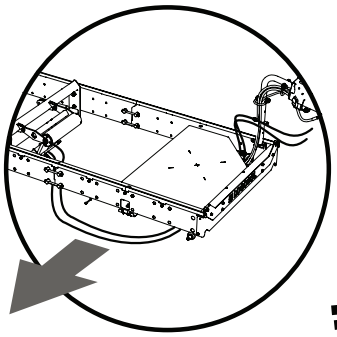

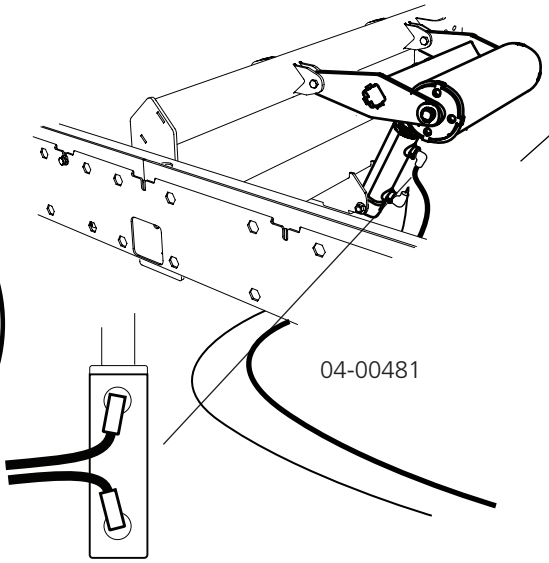

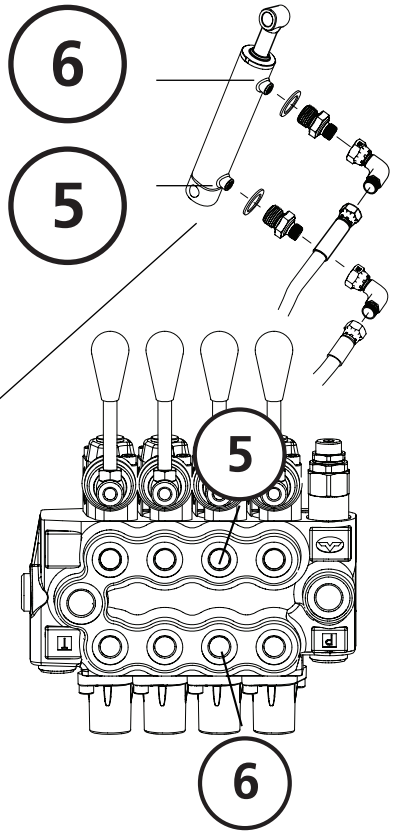

01-00604

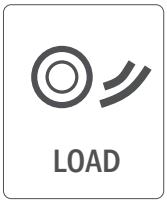

04-00468

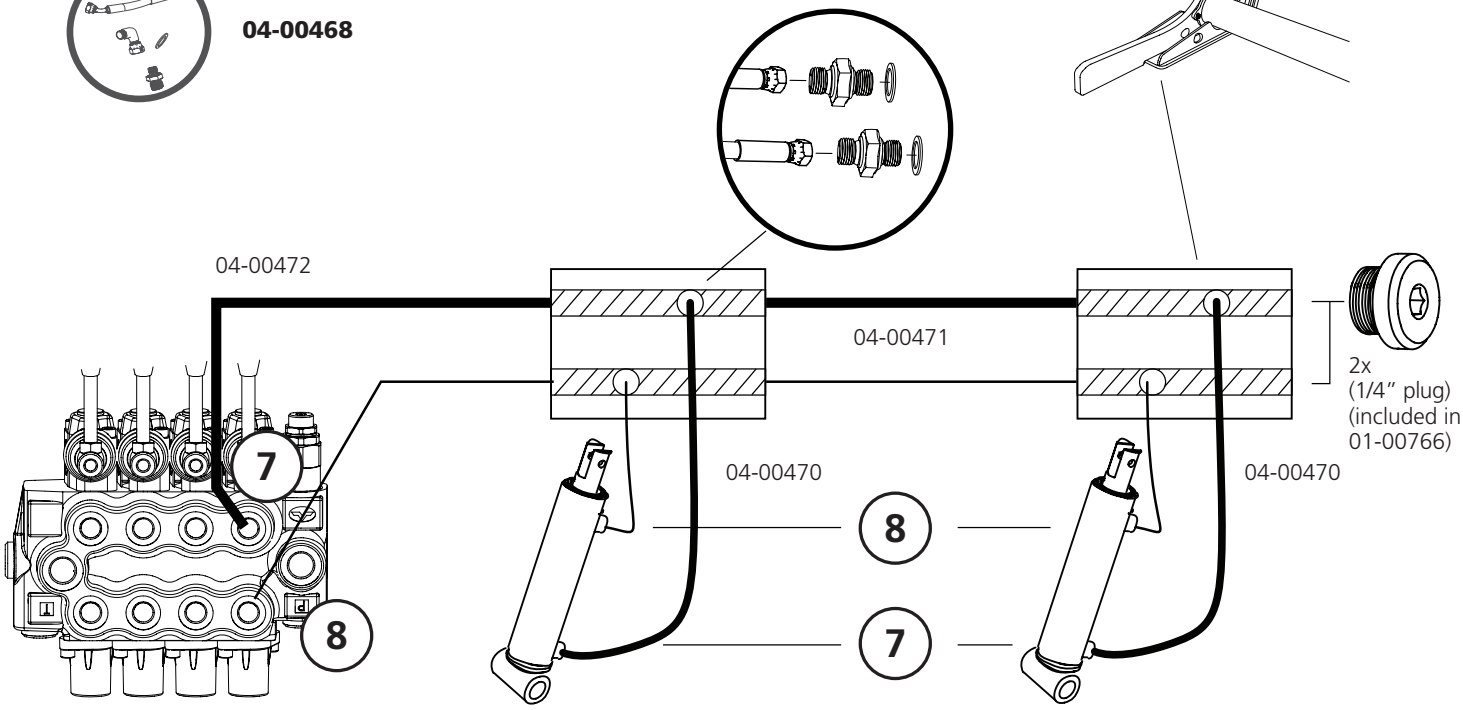

HYDRAULIC HOSE

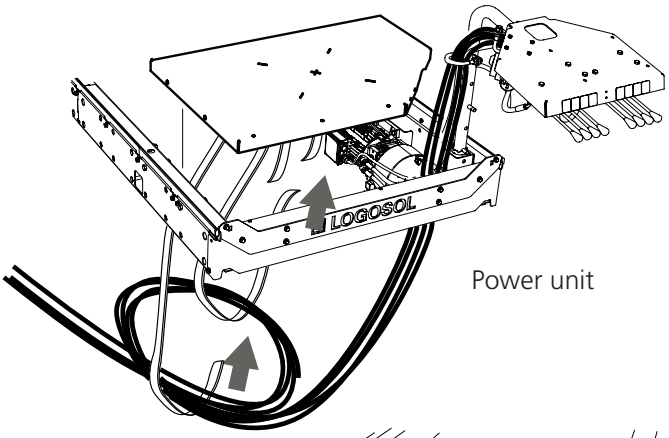

Power unit

Securing hydraulic hose

The hydraulic hoses shall be secured beneath the log bed on its route between the functions and the operating position. Secure the hoses using the straps provided. Be sure to stretch the hoses, try to minimize the amount of hose hanging between the brackets and ensure that they are not pinched so that the brackets cause wear to the hoses.
At the operating position, hang up and secure the excess hose beneath the work platform using the straps (note: applicable to power units only). Assembly of the platform is on the next page.
With petrol units, straps are used to secure the hoses along the unit platform.

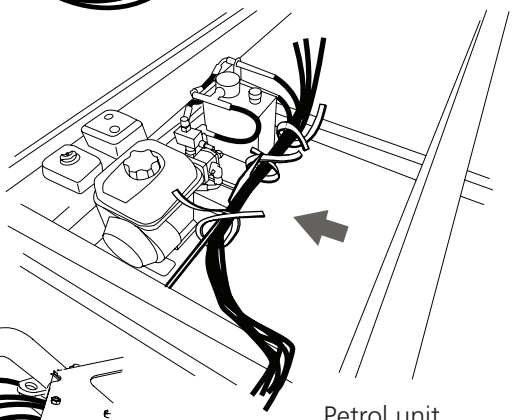

Petrol unit

Fit the cable cover over the hoses on the part that is below the valves.

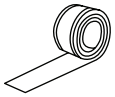

8 x – 04-00526

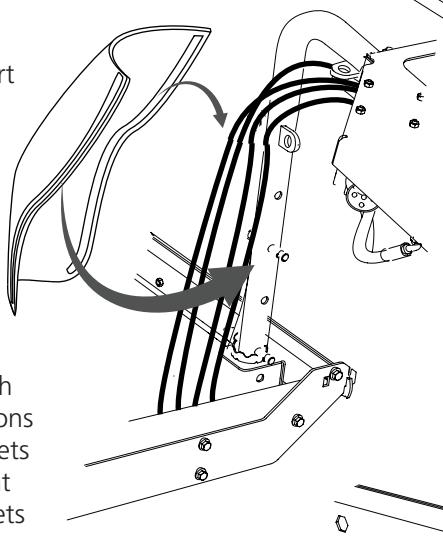

The hydraulic hoses shall be secured beneath the log bed on its route between the functions and the operating position. Using the brackets supplied, be sure to stretch the hoses so that they do not hang down between the brackets and ensure that they are not pinched so that the brackets cause wear to the hoses.

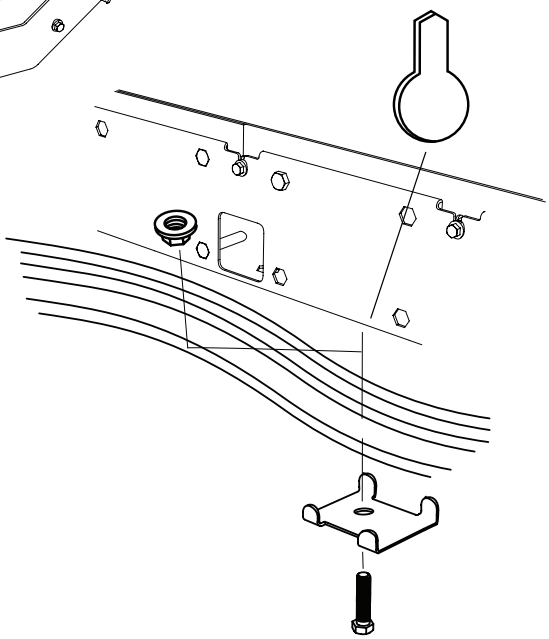

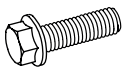

10x – M10x80

10 x – M10

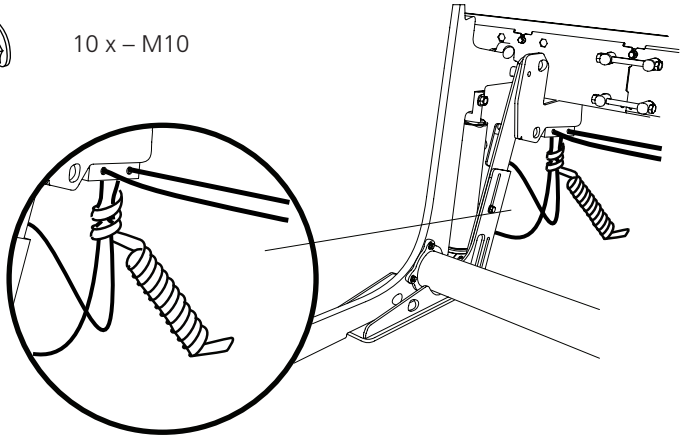

Operating position

The hydraulic hoses shall be secured on their route up to the operating position. Using the brackets supplied, be sure to collect the hoses in a neat bundle and also ensure that they are not pinched so that the brackets cause wear to the hoses. When the hose brackets are mounted, continue with assembling the floor above the hydraulic unit (note: Applicable to power units only).

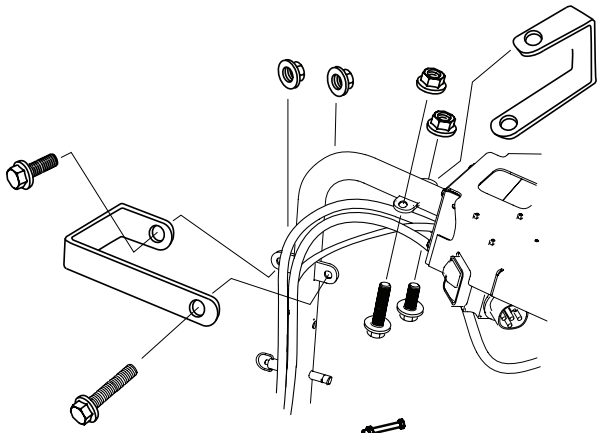

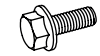

2 x – M12x25

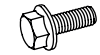

2 x – M12x90

4 x – M2

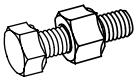

4 x – M12x90 +M12

4 x – M12

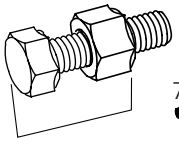

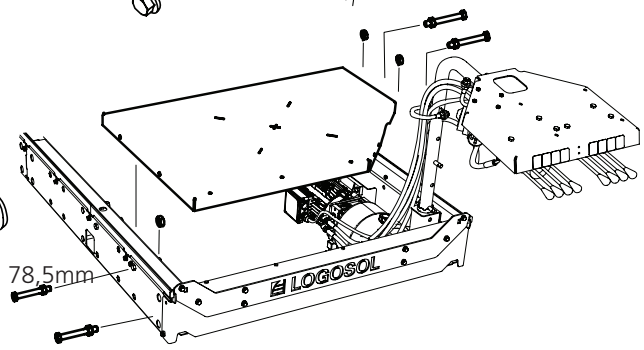

Grip tape

Apply grip tape as illustrated to ensure good grip on the operating position. Cut the strips and wear protective gloves when securing the strips to avoid scratches.

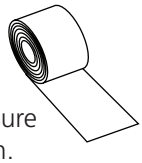

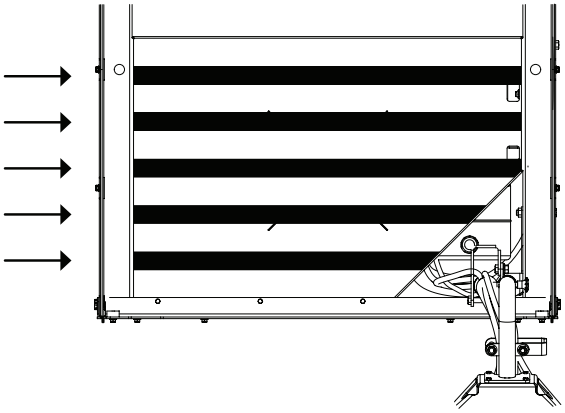

1 x – 04-00528

Adjusting log support

The angle of the log supports is adjustable. The goal is to achieve a 90 degree angular ratio in relation to the log bed. Undo the screws that hold the log supports in the bed. Note that the upper screw towards the centre of the rail should only be very slightly loosened. Then use the knob to adjust the angle. When the angular ratio is 90 degrees, tighten the fastening screws and the knob.

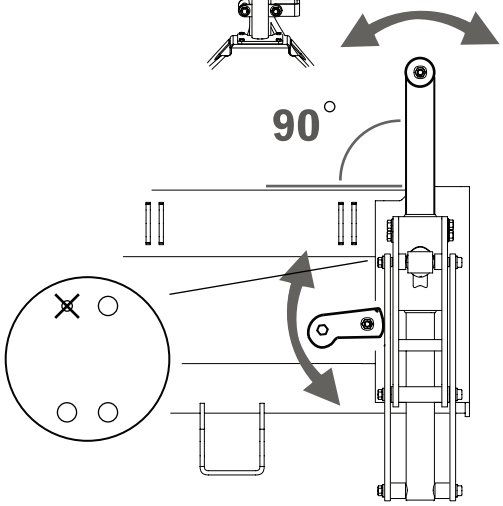

Adjusting log bed

If, after installation, the log supports are at different heights in relation to each other, the log beds must be adjusted. It is the length of the linkage that determines the height of the log supports. To adjust, undo the log beds' screw joints and adjust the beds in the oblong grooves so that the log supports end up at the same level. Then re-tighten the screw joints.

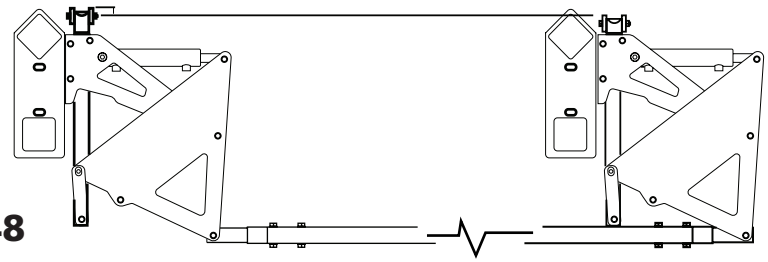

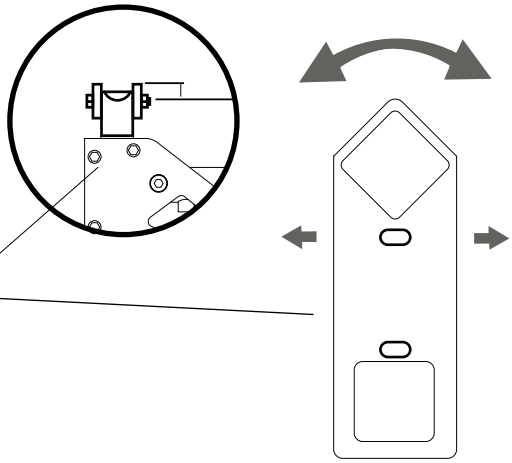

ADJUSTMENT

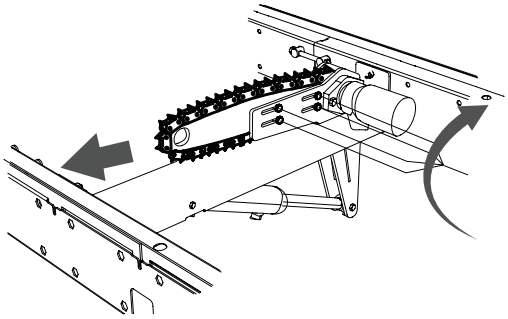

Adjusting chain tension

Adjust the chain tension by undoing the screws holding the guide bar, then tighten up the chain using a breaking bar. Then re-tighten the screws.

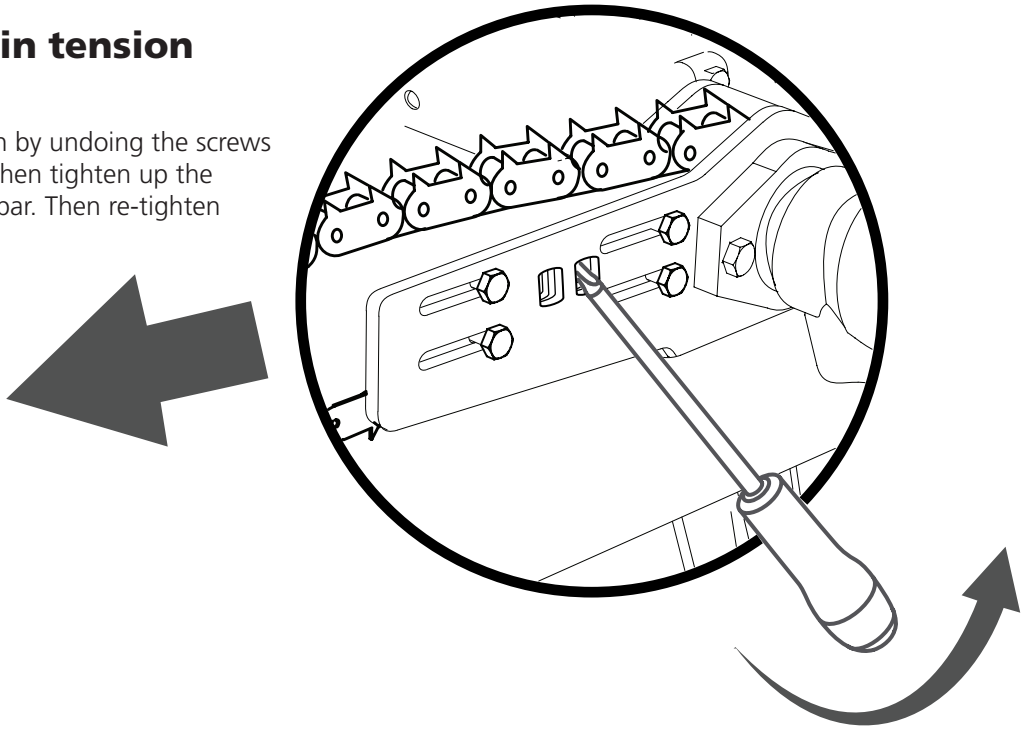

Adjusting log loader foot

In order for the log loader to work, the foot must be adjusted so that it provides support against the ground. Undo the screws and drop the foot down, check the angle of the leg against the marking, and then secure the foot.

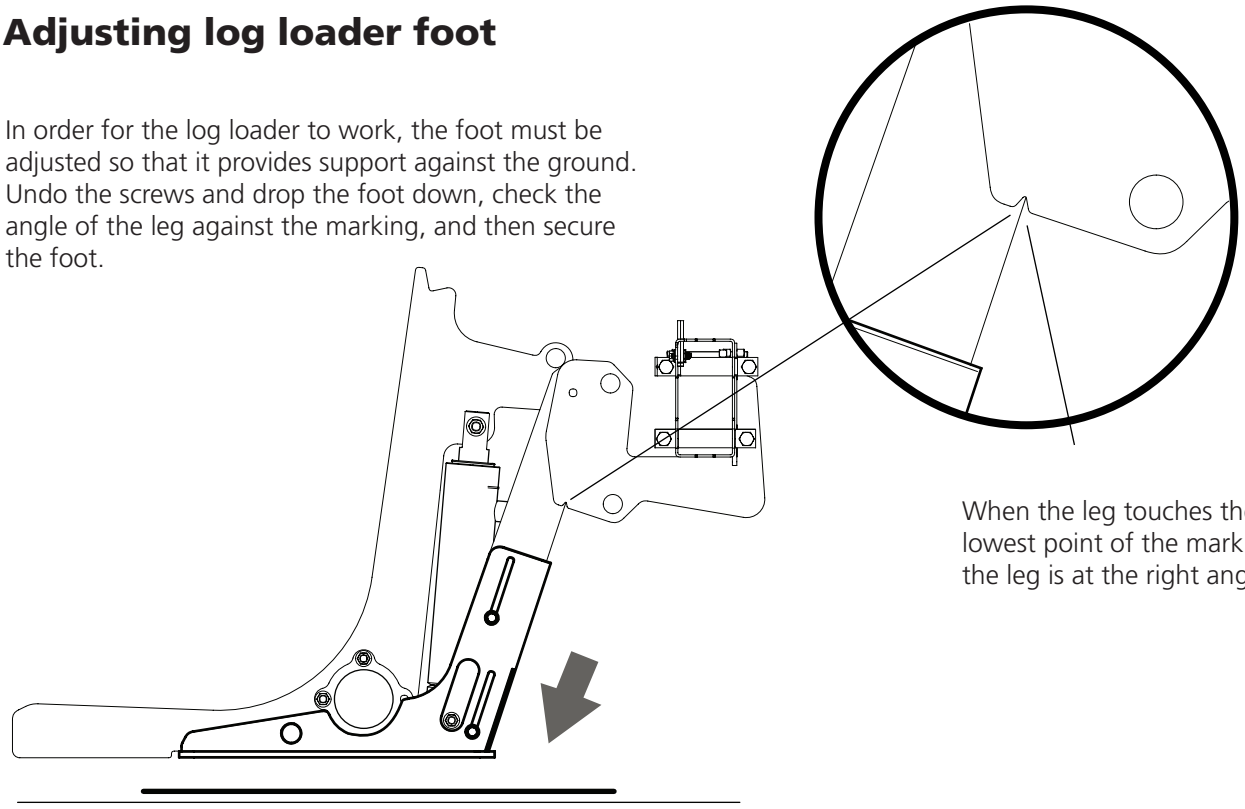

When the leg touches the lowest point of the marking, the leg is at the right angle.

FIRST START-UP

Warning! Fire risk. Hydraulic oil is flammable, do not perform hot work in the vicinity of hydraulic components and equipment.

Warning! Pinch risk. Do not remain within the work area when the hydraulic cylinders are loaded.

Warning! Cuts. Never handle pressurized hydraulic hoses, oil from a pressurized hose can penetrate the skin and cause serious injury.

Warning! Burn injuries. Allow the equipment to cool down before working with hydraulic units and hoses. The hydraulic oil can reach high temperatures during use.

Handle hydraulic hoses and couplings carefully during assembly and maintenance work. Avoid sharp bends on hydraulic hoses. Sharp bends damage the hoses and increase the risk of breakdown. Check that there is enough hose for the movement of the function.

Do not lift or handle hydraulic equipment connected to the hoses or couplings.

Always use hydraulic oil prescribed by Logosol when working with the equipment.

Always wipe up any spillage of hydraulic oil from the product and the working area. Residual hydraulic oil constitutes a slip hazard to users.

Always use absorbent cloths beneath the equipment when working with the machine.

First start-up

When all assembly and connections are completed, check that all couplings on the machine are properly tightened. Then fill the tank with oil.

Then start the hydraulic pump and run one function at a time, it may take a little while for the oil to fill the system and force the air out. Place absorbent cloth beneath the couplings for each function that is started up. Check the tightness of the couplings.

It might be necessary to refill with oil several times before there is oil in the entire system. It is a good idea to check the oil level in the tank every time a function is completed. Take care not to run the oil tank dry while filling the hydraulic hoses. If the tank becomes empty, a lot of air enters the system and it then takes longer than necessary before it is forced out.

If the pump is not activated in connection with start-up, check that the pump's coupling is not phase-inverted.

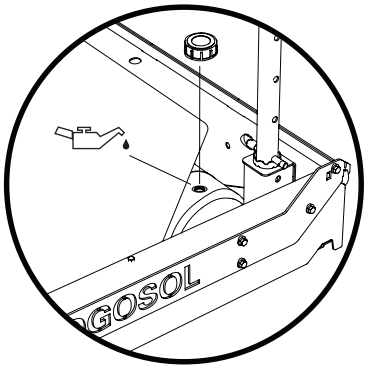

Hydraulic oil

Hydraulic oil:
(ISO VG 32)

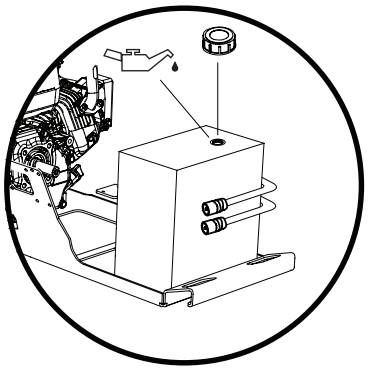

USE

If the functions have been connected as described,
the function shall be as in the illustrations below.

SUPPORT

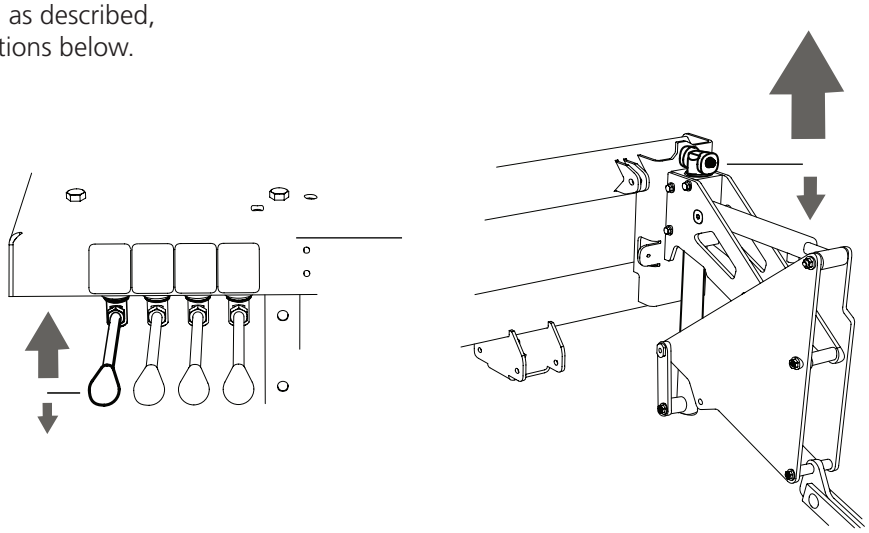

GRIP

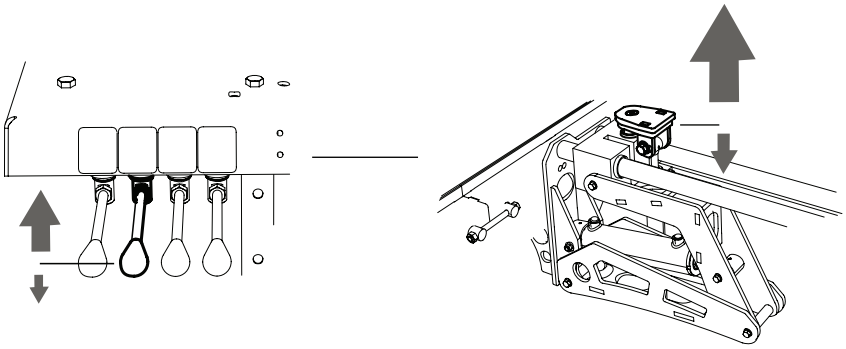

GRIP

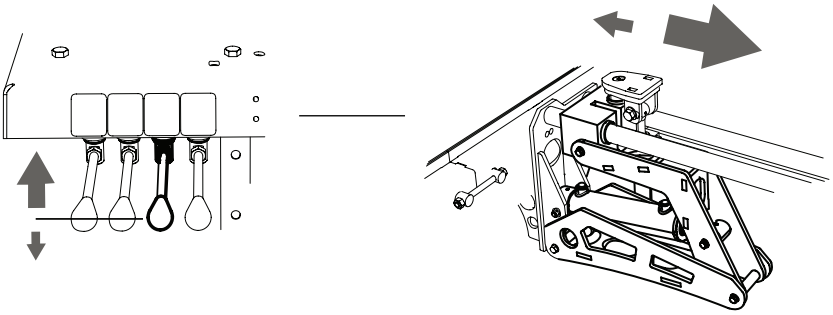

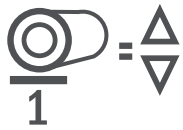

1

TOEBOARD

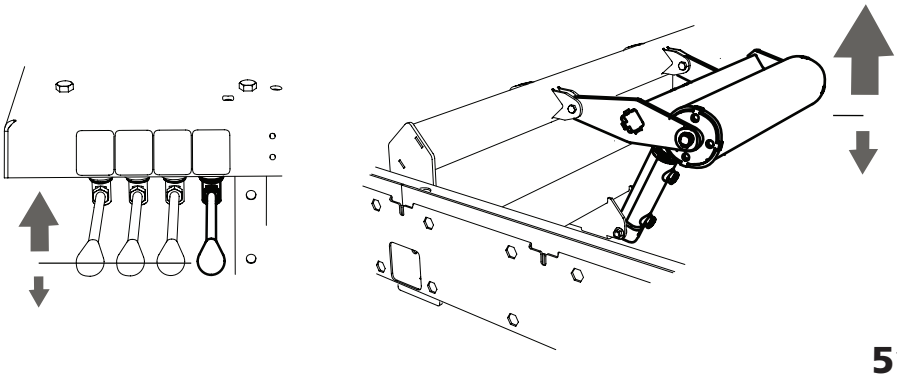

USE

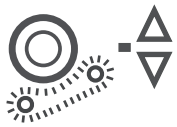

ROTATE

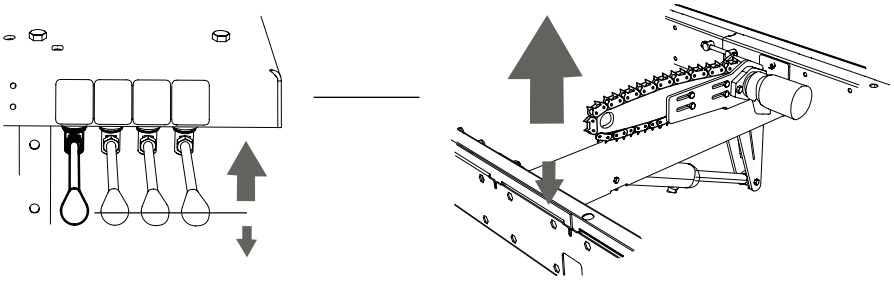

ROTATE

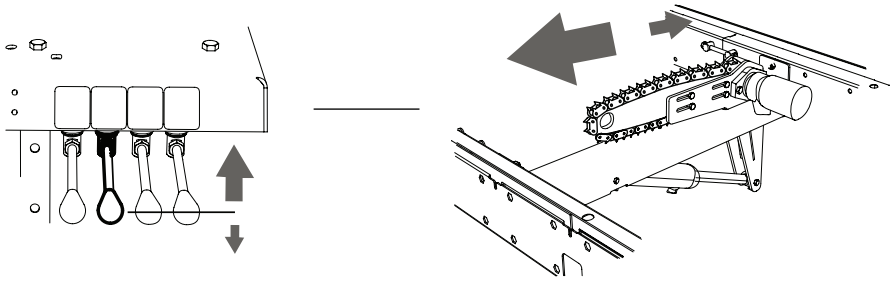

2

TOEBOARD

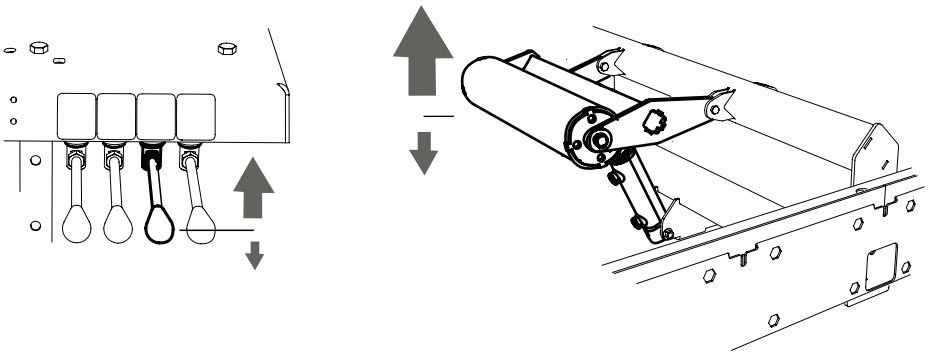

LOAD

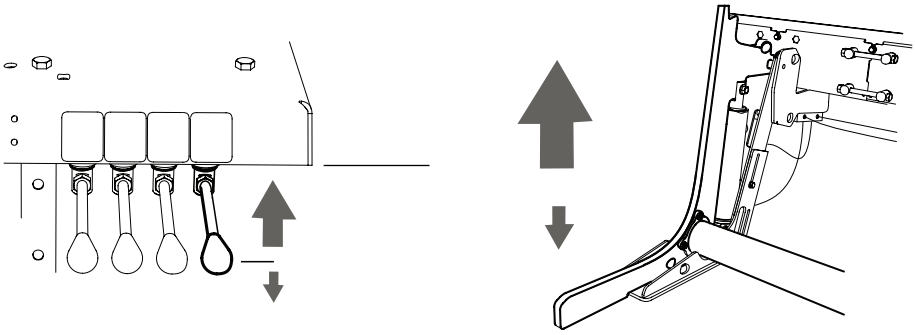

TRANSPORT

Transporting the machine

If the machine has a trailer kit and is to be transported, check that everything on the machine is secure.
The following hydraulic functions must be placed in transport position before transportation. Before transportation, make sure that there will not be any collisions between the functions.

Transport position for the log loader

The log loaders must be placed in the transport position before the sawmill can be transported. Start by putting the loaders in their top position, secure the lifting arms (1). Then lift the log loader foot using the hydraulic lever. Then secure the foot in the log lift arm (2), note that the Foot needs to be in its top position in the adjusting grooves.

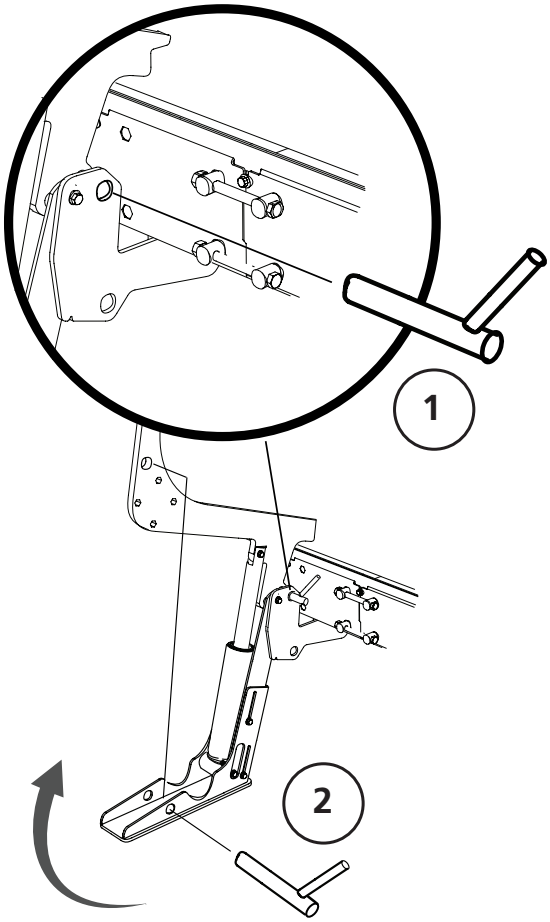

Note that the saw head's blade tensioning arm must be positioned so that the T-handle is parallel to the rails so as not to collide with the log loader in transport position.

Transport position for the log supports

The log supports must be placed in the top position during transport, otherwise there is insufficient ground clearance and there is a risk of damaging the machine.

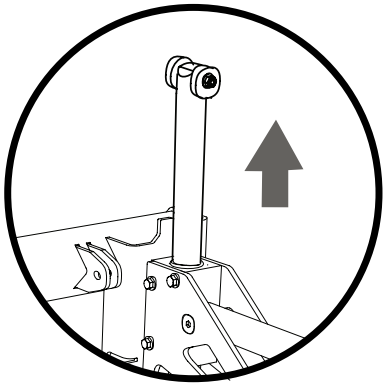

Transport position of log clamp

The log clamp must be placed in its innermost position before transport in order to maximise ground clearance.

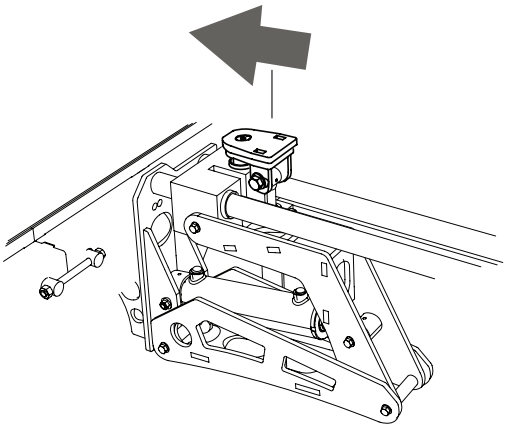

01-00627

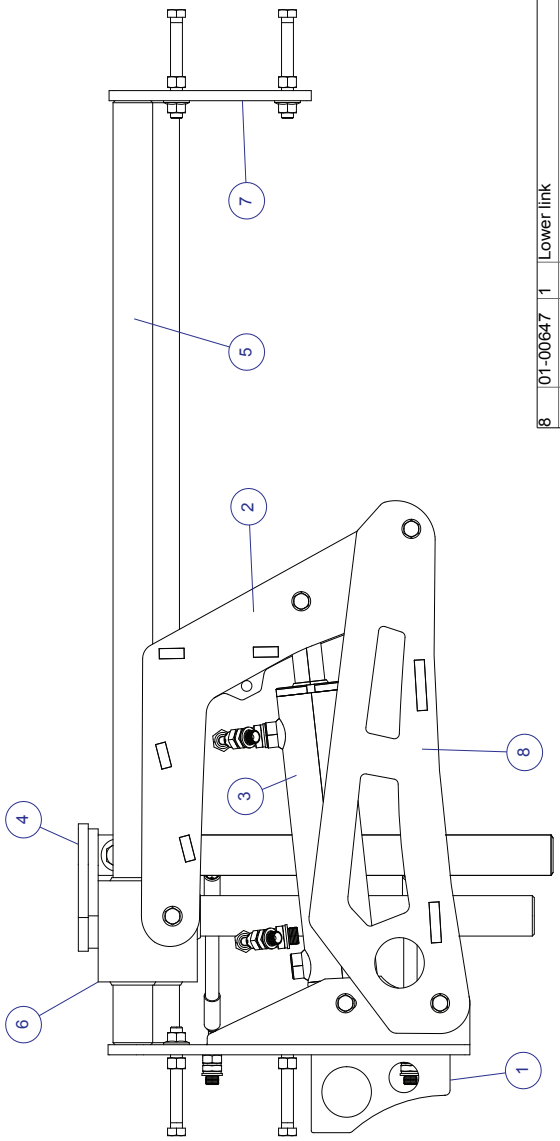

New Issue	Old Issue	Date	User	Remarks
2	1	08-01-2021	JH	Changes after preserie production
-	-	-	-	-
-	-	-	-	-

Item no.	Art.no.	Qty.	Description	Issue	Garp No.
8	01-00647	1	Lower link	1	
7	01-00649	1	Bracket right	2	
6	01-00628	1	Carriage	2	
5	03-02730	2	Horisontal bar	2	
4	01-00625	1	Clamp assembly	1	
3	01-00648	1	Horizontal cylinder Log clamp	2	
2	01-00590	1	Upper link	2	
1	01-00646	1	Bracket left	2	

A3 ISO E
Scale: 1:5
Iron/CAD 2D drawing 3D-file available
General tolerances acc. to: ISO 2768-1 medium (-mK)
Material:
Weight: 66,925
Drawn by: JH
Reviewed by:
Last save: 2021-03-02 13:56
LOGOSOL
Fiskaregatan 2
870 23 Härnösand
Tel: 0611-182 85
Log clamp B1001
Sheet no.: 1 (1)
Issue: 2
Drawing no.: 01-00627
Garp no.:

Denna dokument och dess innehåll tillhör Logosol AB
Innehållet får ej kopieras, reproduceras, överföras eller skickas
till tredje part, eller användas för syften som ej skriftligen godkänts.

This document and its contents are the exclusive property of Logosol AB
and may not be copied, reproduced, transmitted or communicated to a
third part, or used for any purpose without written permission.

01-00560

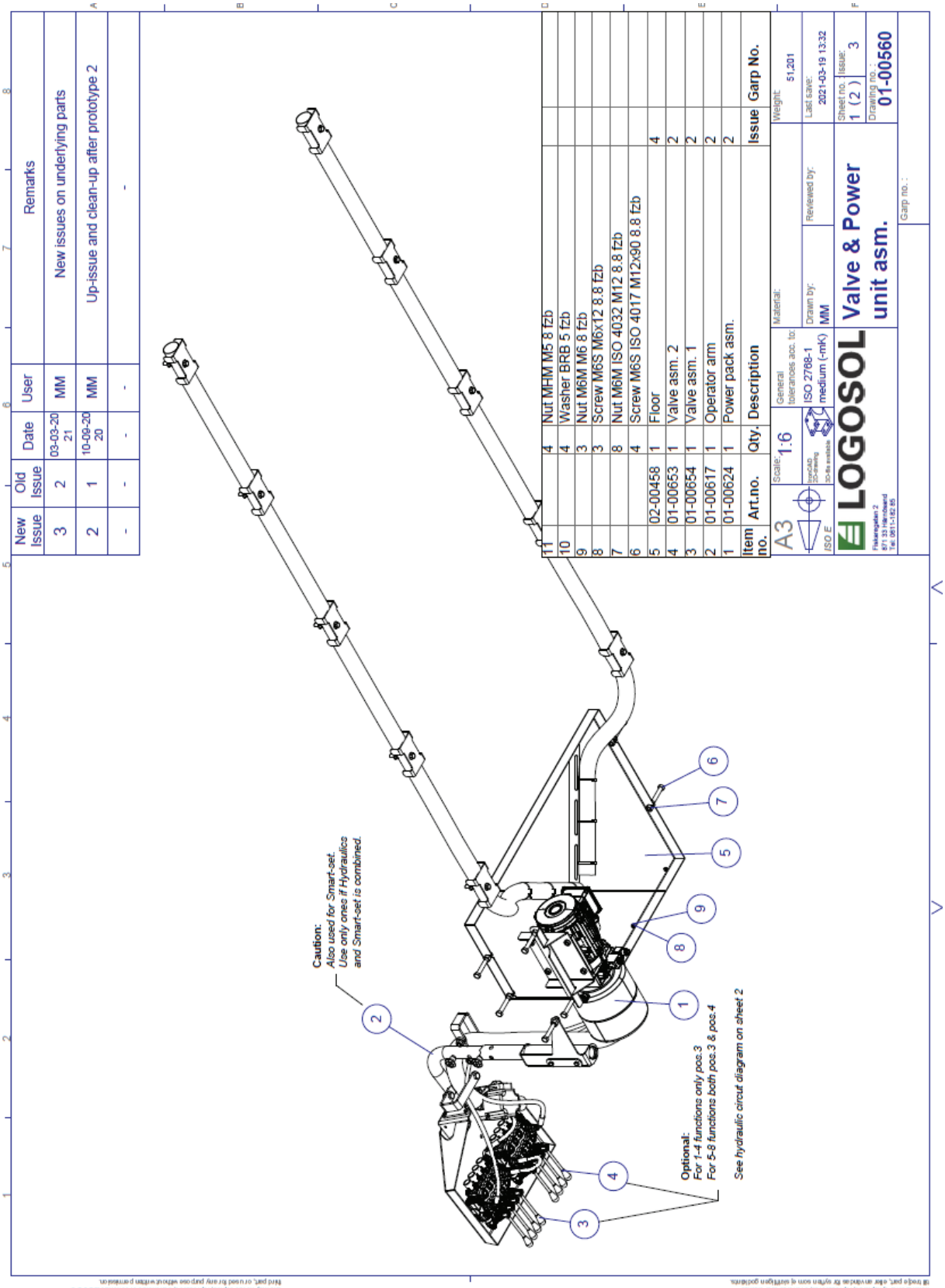
Caution:
Also used for Smart-set.
Use only ones if Hydraulics
and Smart-set is combined.
Optional:
For 1-4 functions only pos.3
For 5-8 functions both pos.3 & pos.4
See hydraulic circut diagram on sheet 2
1
2
3
4
5
6
7
8
9
Remarks
New issues on underlying parts
Up-issue and clean-up after prototype 2
-
New Issue
Old Issue
Date
User
3
2
03-03-2021
MM
2
1
10-09-2020
MM
-
-
-
-
11
4
Nut MHM M5 8 fzb
10
4
Washer BRB 5 fzb
9
3
Nut M6M M6 8 fzb
8
3
Screw M6S M6x12 8.8 fzb
7
8
Nut M6M ISO 4032 M12 8.8 fzb
6
4
Screw M6S ISO 4017 M12x90 8.8 fzb
5
02-00458
1
Floor
4
4
01-00653
1
Valve asm. 2
2
3
01-00654
1
Valve asm. 1
2
2
01-00617
1
Operator arm
2
1
01-00624
1
Power pack asm.
2
Item no.
Art.no.
Qty.
Description
Issue
Garp No.
A3
ISO E
Scale: 1:6
General tolerances acc. to:
ISO 2768-1 medium (-mK)
Material:
Weight: 51,201
Drawn by: MM
Reviewed by:
Last save: 2021-03-19 13:32
LOGOSOL
Valve & Power unit asm.
Sheet no. : 1 (2)
Issue: 3
Drawing no. : 01-00560
Garp no. :

01-00556

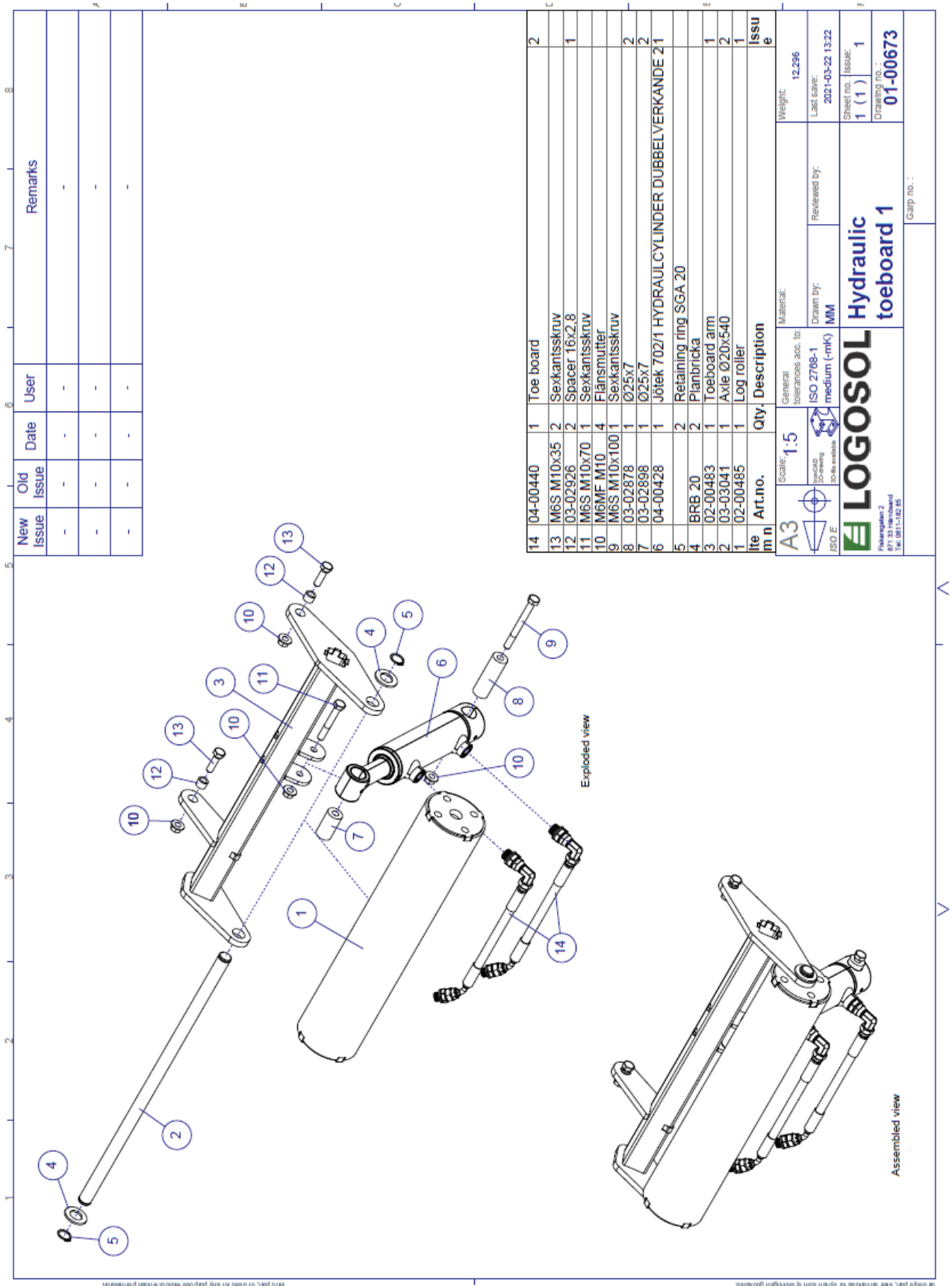

New Issue	Old Issue	Date	User	Remarks
-	-	-	-	-
-	-	-	-	-
-	-	-	-	-

Item	Art.no.	Qty.	Description	Issue
14	04-00440	1	Toe board	2
13	M6S M10x35	2	Sexkantsskruv	
12	03-02926	2	Spacer 16x2,8	1
11	M6S M10x70	1	Sexkantsskruv	
10	M6MF M10	4	Flänsmutter	
9	M6S M10x100	1	Sexkantsskruv	
8	03-02878	1	Ø25x7	2
7	03-02898	1	Ø25x7	2
6	04-00428	1	Jötek 702/1 HYDRAULCYLINDER DUBBELVERKANDE 21	
5		2	Retaining ring SGA 20	
4	BRB 20	2	Planbricka	
3	02-00483	1	Toeboard arm	1
2	03-03041	1	Axle Ø20x540	2
1	02-00485	1	Log roller	1

A3 ISO E
Scale: 1:5
Insertion scaling: Scale available
General tolerances acc. to: ISO 2768-1 medium (-mK)
Material:
Weight: 12.296
Drawn by: MM
Reviewed by:
Last save: 2021-03-22 13:22
LOGOSOL
Fiskarvägatan 2
871 33 Härnösand
Tel: 0611-182 85
Hydraulic toeboard 1
Sheet no.: 1 (1)
Issue: 1
Drawing no.: 01-00673
Garp no.:

Detta dokument och dess innehåll tillhör Logosol AB. Innehållet får ej kopieras, reproduceras, d verkliga eller säljas till tredje part, eller användas för syften som ej godkänts av Logosol AB.

This document and its contents are the exclusive property of Logosol AB and may not be copied, reproduced, transmitted or communicated to a third part, or used for any purpose without written permission.

01-00584

New Issue	Old Issue	Date	User	Remarks
3	2	09-03-2021	ES	01-00641, 01-00643 & 01-00644 updated. 01-00642 replaced by 01-00672.
2	1	22-05-2020	ES	Optimized design for pre-series order.
-	-	-	-	-

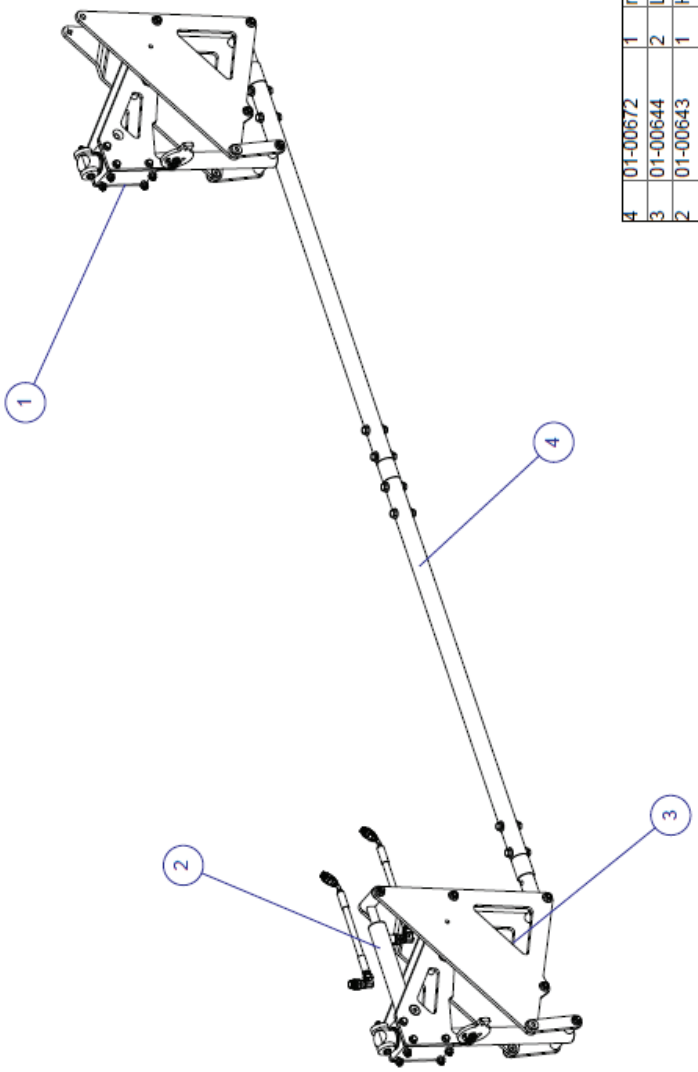

item no.	Art.no.	Qty.	Description	Issue
4	01-00672	1	motion transfer link	2
3	01-00644	2	Log support asm	2
2	01-00643	1	Hydraulic cylinder asm	2
1	01-00641	2	Log support guide asm	3

A3 | Scale: 1:10 | ISO E | General tolerances acc. to: ISO 2768-1 medium (-mK) | Material: | Weight: 64,479

Drawn by: ES | Reviewed by: | Last save: 2021-03-09 11:29

LOGOSOL
Fiskeregaten 2
871 33 Hemnesberget
Tel. 0611-182 85

Hydraulic log support v2

Sheet no.: 1 (1) | Issue: 3

Drawing no.: **01-00584**

Garp no.:

Data dette dokument er ikke fortrolig. Logosol AS forbehelder seg opphavsrettslig eiendomsrett til dette dokument, herunder rett til å kopiere, reproducere og videreformidle det til tredje part, eller anvende for annen enn det avtalte formål.

This document and its contents are the exclusive property of Logosol AS and may not be copied, reproduced, transmitted or communicated to a third part, or used for any purpose without written permission.

New Issue	Old Issue	Date	User	Remarks
2	1	15-01-2021	ES	03-02815, 03-02816 and 03-02838 updated.
-	-	-	-	-
-	-	-	-	-

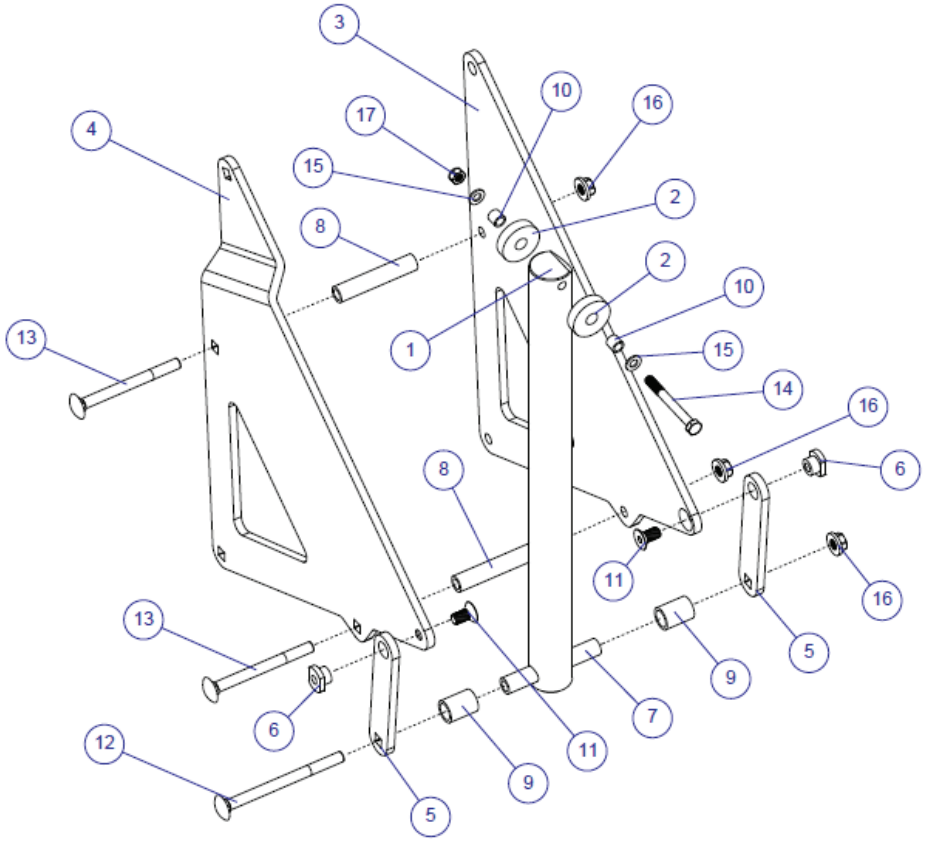

Item no.	Art.no.	Qty.	Description	Issue
17	LM6M M8 Lock	1	LM6M M8 Lock nut with nylon ring, class 8, fzb	
16	M6MF M10, 8	3	Nut with flange, M6MF M10, 8 Fzb	
15	BRB M8 Plain	2	BRB M8 Plain washer, fzb	
14	M6S M8x75 He	1	M6S M8x75 Hex bolt, 8.8, Fzb	
13	MVBF M10x11	2	MVBF M10x110 Carriage bolt, 8.8 FZB	
12	MVBF M10x13	1	MVBF M10x130 Carriage bolt, 8.8 FZB	
11	MF6S M10x20	2	Countersunk socket screw, MF6S M10x20 10.9 Fzb	
10	DR-01467	2	Spacer, Ø12 mm, L=11 mm, Øi=8 mm	2
9	03-02842	2	Log support bottom spacer	1
8	03-02822	2	Ø16x2,8x83 reinforcement spacer	1
7	03-02843	1	Bottom link shaft	1
6	03-02830	2	Pivot link fastener	2
5	03-02814	2	Linkage plate	3
4	03-02815	1	Left triangle plate	5
3	03-02816	1	Right triangle plate	5
2	03-02839	2	Log support roller	1
1	03-02838	1	Log support rod	3

A3 ISO E

Scale: 1:4

IronCAD 3D-drawing 3D-file available

General tolerances acc. to: ISO 2768-1 medium (-mK)

Material:

Weight: 17,068

Drawn by: ES

Reviewed by:

Last save: 2021-03-09 10:56

LOGOSOL

Fiskaregatan 2
871 33 Härnösand
Tel: 0611-182 85

Log support asm

Sheet no.: 1 (1)

Issue: 2

Drawing no.: 01-00644

Garp no.:

This document and its contents are the exclusive property of Logosol AB and may not be copied, reproduced, transmitted or communicated to a third part, or used for any purpose without written permission.

Detta dokument och dess innehåll tillhör Logosol AB. Innehållet får ej kopieras, reproduceras, överföras eller utdelas till tredje part, eller användas för syften som ej uttryckligen godkänts.

01-00642

New Issue	Old Issue	Date	User	Remarks
4	3	11-11-2021	MM	Made a new part nr. for what we assemble in production
3	2	09-03-2021	ES	02-00445 updated to issue 4. Added 03-02970.
2	1	15-01-2021	ES	02-00445 updated.

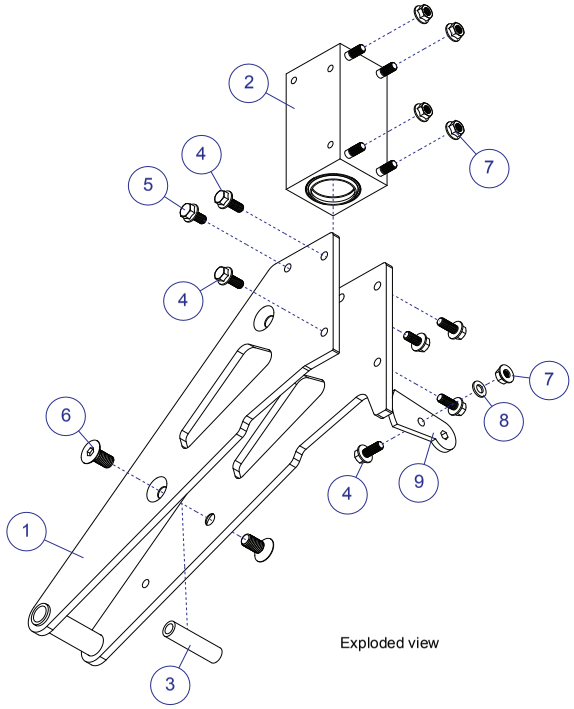

Exploded view

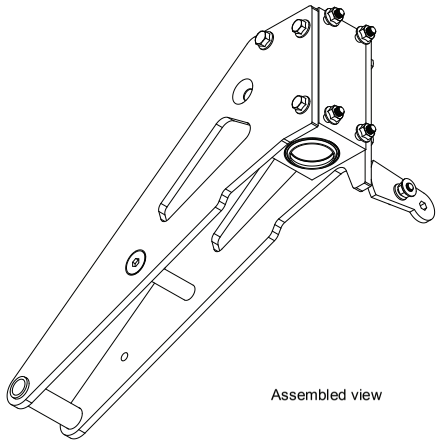

Assembled view

Item no.	Art.no.	Qty.	Description	Issue
9	03-03293	1	Excenter	1
8		1	Washer BRB M8 fzb	
7		5	Screw MF6M M8 8 Fzb	
6		2	Screw MF6S M12x25 10.9 Fzb	
5		2	Screw M6SF M8x16 8.8 fzb	
4		5	Screw M6SF M8x20 8.8 fzb	
3	03-02820	1	Threaded spacer	1
2	01-00769	1	Log support guide asm.	1
1	02-00445	1	Main frame weld asm	4

A3 ISO E

Scale: 1:4

IronCAD 2D-drawing 3D-file available

General tolerances acc. to: ISO 2768-1 medium (-mK)

Material:

Weight: 7,688

Drawn by: MM

Reviewed by:

Last save: 2021-12-02 12:56

LOGOSOL

Fiskaregatan 2
871 33 Härnösand
Tel: 0611-182 85

Log support guide asm

Sheet no. : 1 (1) Issue: 4

Drawing no. : **01-00641**

Garp no. :

This document and its contents are the exclusive property of Logosol AB and may not be copied, reproduced, transmitted or communicated to a third part, or used for any purpose without written permission.

Detta dokument och dess innehåll tillhör Logosol AB. Innehållet får ej kopieras, reproduceras, överföras eller skickas till tredje part, eller användas för syften som ej skriftligen godkänts.

LOGOSOL

01-00644

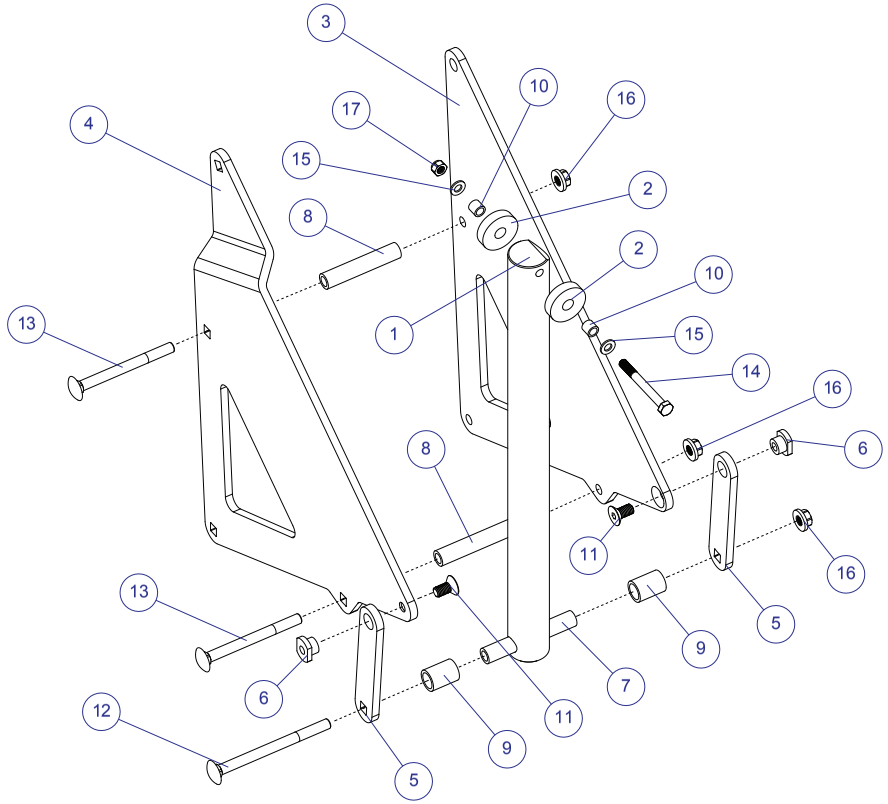

New Issue	Old Issue	Date	User	Remarks
2	1	15-01-2021	ES	03-02815, 03-02816 and 03-02838 updated.
-	-	-	-	-
-	-	-	-	-

Item no.	Art.no.	Qty.	Description	Issue
17	LM6M M8 Lock	1	LM6M M8 Lock nut with nylon ring, class 8, fzb	
16	M6MF M10, 8	3	Nut with flange, M6MF M10, 8 Fzb	
15	BRB M8 Plain	2	BRB M8 Plain washer, fzb	
14	M6S M8x75 He	1	M6S M8x75 Hex bolt, 8.8, Fzb	
13	MVBF M10x11	2	MVBF M10x110 Carriage bolt, 8.8 FZB	
12	MVBF M10x13	1	MVBF M10x130 Carriage bolt, 8.8 FZB	
11	MF6S M10x20	2	Countersunk socket screw, MF6S M10x20 10.9 Fzb	
10	DR-01467	2	Spacer, Ø12 mm, L=11 mm, Øi=8 mm	2
9	03-02842	2	Log support bottom spacer	1
8	03-02822	2	Ø16x2,8x83 reinforcement spacer	1
7	03-02843	1	Bottom link shaft	1
6	03-02830	2	Pivot link fastener	2
5	03-02814	2	Linkage plate	3
4	03-02815	1	Left triangle plate	5
3	03-02816	1	Right triangle plate	5
2	03-02839	2	Log support roller	1
1	03-02838	1	Log support rod	3

A3 ISO E

Scale: 1:4

IronCAD 2D-drawing 3D-file available

General tolerances acc. to: ISO 2768-1 medium (-mK)

Material:

Weight: 17,068

Drawn by: ES

Reviewed by:

Last save: 2021-03-09 10:56

LOGOSOL
Fiskaregatan 2
871 33 Härnösand
Tel: 0611-182 85

Log support asm

Sheet no.: 1 (1)

Issue: 2

Drawing no.: 01-00644

Garp no.:

This document and its contents are the exclusive property of Logosol AB and may not be copied, reproduced, transmitted or communicated to a third part or used for any purpose without written permission.

Detta dokument och dess innehåll tillhör Logosol AB. Immaterialrätt är upphovsrätt, reproduceras, överföras eller skickas inte till tredje part eller användas för syften som ej avsiktligen godkänts.

01-00672

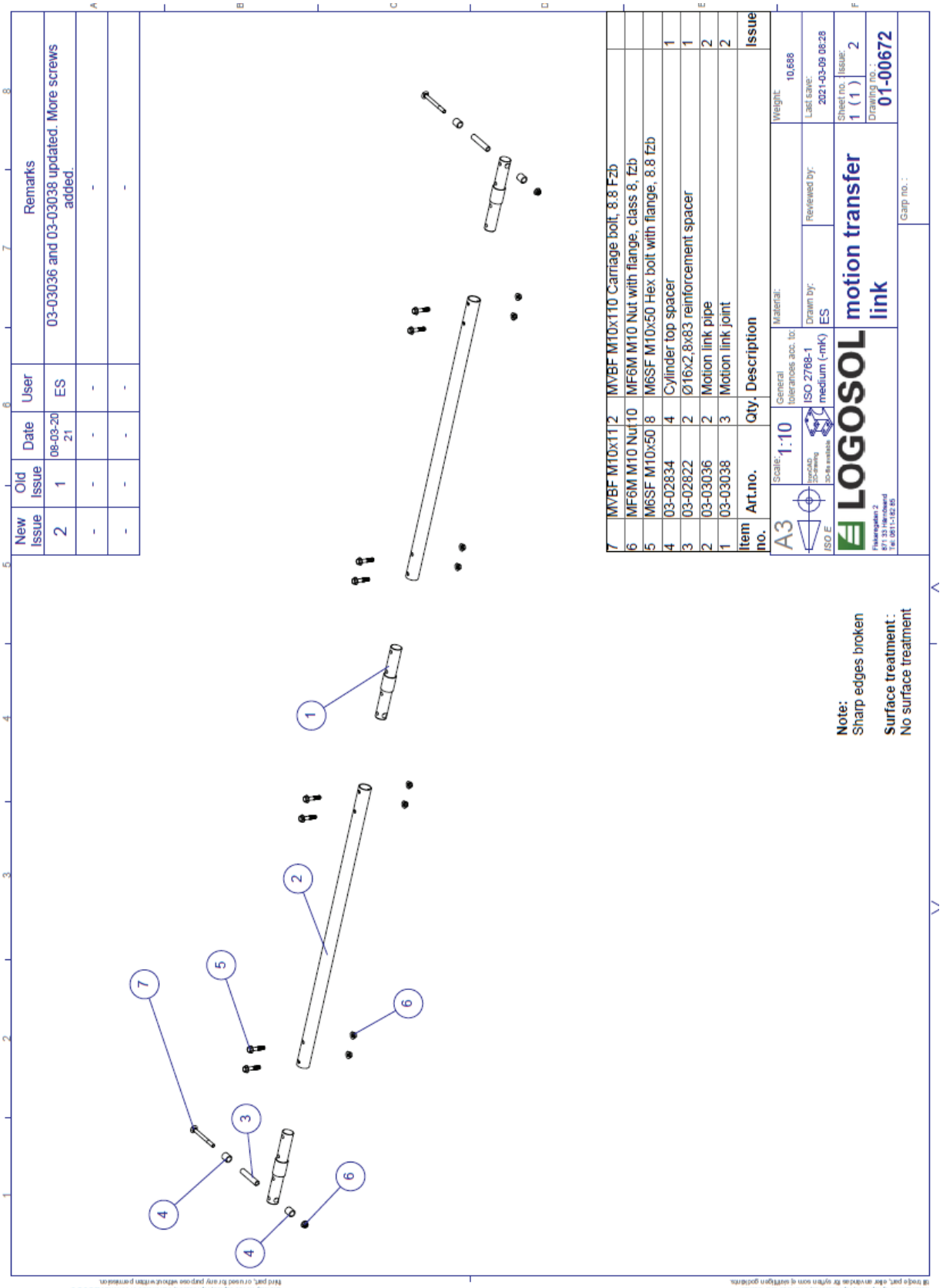
New Issue
Old Issue
Date
User
Remarks
2
1
08-03-2021
ES
03-03036 and 03-03038 updated. More screws added.
7 MVBF M10x112 MVBF M10x110 Carriage bolt, 8.8 Fzb
6 MF6M M10 Nut 10 MF6M M10 Nut with flange, class 8, fzb
5 M6SF M10x50 8 M6SF M10x50 Hex bolt with flange, 8.8 fzb
4 03-02834 4 Cylinder top spacer 1
3 03-02822 2 Ø16x2,8x83 reinforcement spacer 1
2 03-03036 2 Motion link pipe 2
1 03-03038 3 Motion link joint 2
Item no. Art.no. Qty. Description Issue
Note:
Sharp edges broken
Surface treatment:
No surface treatment
A3
Scale: 1:10
ISO E
General tolerances acc. to: ISO 2768-1 medium (-mK)
Material:
Weight: 10,688
Drawn by: ES
Reviewed by:
Last save: 2021-03-09 08:28
LOGOSOL
motion transfer link
Sheet no.: 1 (1)
Issue: 2
Drawing no.: 01-00672
Garp no.:

01-00634

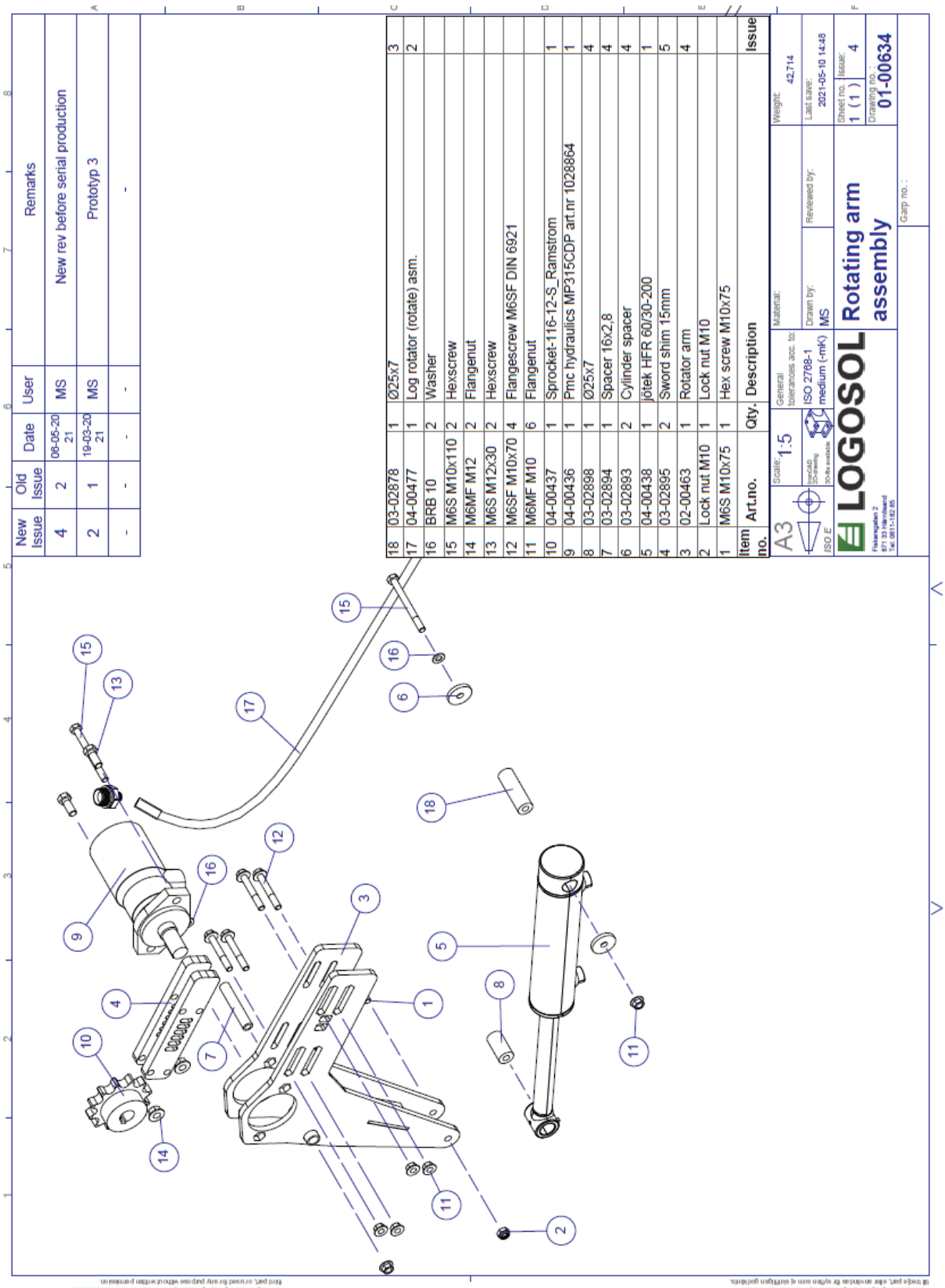

New Issue	Old Issue	Date	User	Remarks
4	2	06-05-2021	MS	New rev before serial production
2	1	19-03-2021	MS	Prototyp 3
-	-	-	-	-

Item no.	Art.no.	Qty.	Description	Issue
18	03-02878	1	Ø25x7	3
17	04-00477	1	Log rotator (rotate) asm.	2
16	BRB 10	2	Washer	
15	M6S M10x110	2	Hexscrew	
14	M6MF M12	2	Flangenut	
13	M6S M12x30	2	Hexscrew	
12	M6SF M10x70	4	Flangescrew M6SF DIN 6921	
11	M6MF M10	6	Flangenut	
10	04-00437	1	Sprocket-116-12-S_Ramstrom	1
9	04-00436	1	Pmc hydraulics MP315CDP art.nr 1028864	1
8	03-02898	1	Ø25x7	4
7	03-02894	1	Spacer 16x2,8	4
6	03-02893	2	Cylinder spacer	4
5	04-00438	1	jötek HFR 60/30-200	1
4	03-02895	2	Sword shim 15mm	5
3	02-00463	1	Rotator arm	4
2	Lock nut M10	1	Lock nut M10	
1	M6S M10x75	1	Hex screw M10x75	

A3 ISO E
Scale: 1:5
Material:
General tolerances acc. to: ISO 2768-1 medium (-mK)
Weight: 42,714
Drawn by: MS
Reviewed by:
Last save: 2021-05-10 14:48
LOGOSOL
Fiskertogaten 2
871 33 Härnösand
Tel: 0611-42 85 00
Rotating arm assembly
Sheet no.: 1 (1) Issue: 4
Drawing no.: 01-00634
Garp no.:

Data dokument och dess innehåll tillhör Logosol AB. Innehållet är ej kopierat, reproducerat, överförts eller lånades till tredje part, eller användas för syften som ej godkänts av Logosol AB.

This document and its contents are the exclusive property of Logosol AB and may not be copied, reproduced, transmitted or communicated to a third part, or used for any purpose without written permission.

01-00692

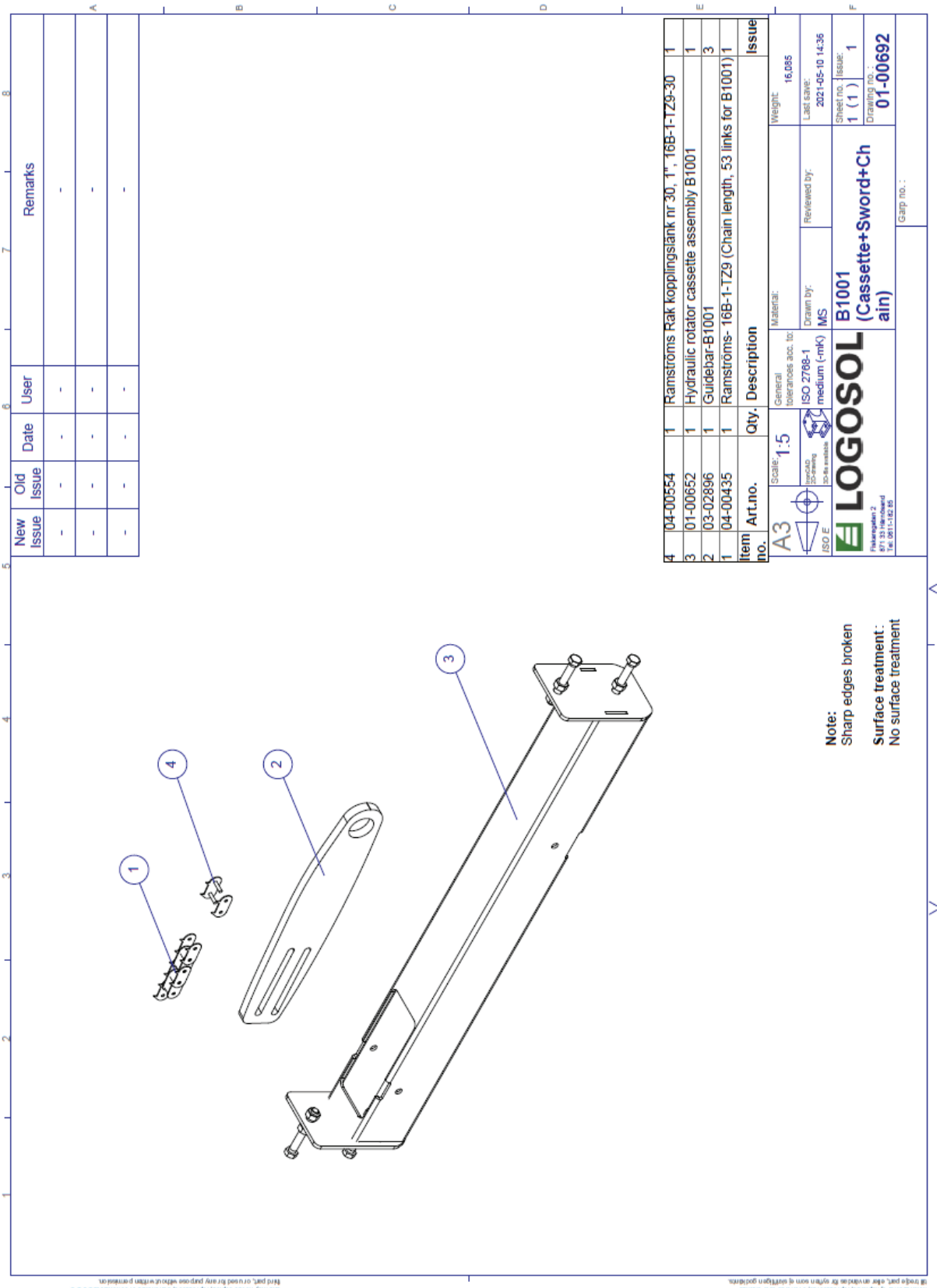

item no.	Art.no.	Qty.	Description	Issue
4	04-00554	1	Ramströms Rak kopplingslänk nr 30, 1", 16B-1-TZ9-30	1
3	01-00652	1	Hydraulic rotator cassette assembly B1001	1
2	03-02896	1	Guidebar-B1001	3
1	04-00435	1	Ramströms- 16B-1-TZ9 (Chain length, 53 links for B1001)	1

New Issue	Old Issue	Date	User	Remarks
-	-	-	-	-
-	-	-	-	-
-	-	-	-	-

A3 ISO E
Scale: 1:5
IsoCAD 3D-drawing 3D-file available
General tolerances acc. to: ISO 2768-1 medium (-mK)
Material:
Weight: 16,085
Drawn by: MS
Reviewed by:
Last save: 2021-05-10 14:36
LOGOSOL
Fiskeregaten 2
871 33 Hemnsand
Tel: 061-1-182 85
B1001 (Cassette+Sword+Chain)
Sheet no.: 1 (1) Issue: 1
Drawing no.: 01-00692
Garp no.:

Denna dokument och dess innehåll tillhör Logosol AS
Innehållet får ej kopieras, reproduceras, överföras eller säljas
till tredje part, eller användas för annan som ej uttryckligen godkänts.

This document and its contents are the exclusive property of Logosol AS
and may not be copied, reproduced, transmitted or communicated to a
third part, or used for any purpose without written permission.

LOGOSOL

01-00604

New Issue	Old Issue	Date	User	Remarks
5	4	06-05-2021	MS	New rev before release to serial production.
4	3	16-03-2021	MS	Changed thickness of 02-00471
3	2	09-12-2020	MS	Prototyp 3

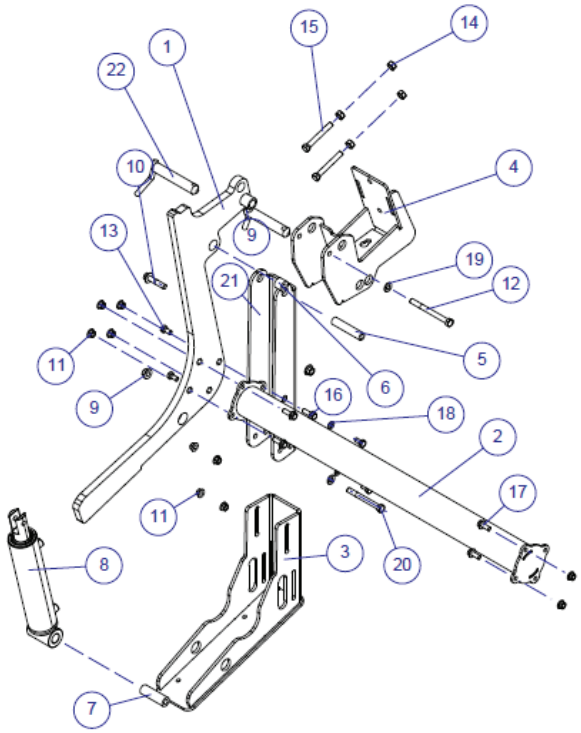

Item no.	Art.no.	Qty.	Description	Issue
22	04-00553	2	Kramp (Z525130KR) Pin with handle 25 x130mm (Pin leng	
21	03-02902	1	Log-turner (turner case)	6
20	M6S M12x110	1	Hexscrew	
19	BRB 12	2	Washer	
18	BRB 10	4	Washer	
17	M6SF M10x25	2	Flangescrew M6SF DIN 6921	
16	M6SF M10x30	4	Flangescrew M6SF DIN 6921	
15	Hexscrew M12	2	Hexscrew M12x90 ISO 4017 (NV18)	
14	Hexnut M12 IS	4	Hexnut M12 ISO 4017 (NV18)	
13	M6S M10x20	4	Hexscrew	
12	M6S M12x130	1	Hexscrew	
11	M6MF M10	10	Flangenut	
10	M6SF M12x55	1	Flangescrew M6SF DIN 6921	
9	M6MF M12	3	Flangenut	
8	04-00552	1	TUBEX, (Logosol, 0665769601, BM 63/40-200S)	1
7	03-03105	1	Spacer (25x12)	2
6	03-03102	1	Spacer (27x7)	2
5	03-03094	1	Spacer (20x4)	3
4	02-00472	1	Log loading (rail attachment)	4
3	02-00481	1	Log loading fot assembly	3
2	02-00482	1	Torsion beam (weld assembly)	2
1	02-00470	1	Log loading arm weld assembly	5

Note:
Sharp edges broken

Surface treatment:
No surface treatment

A3 ISO E

Scale: 1:10

IronCAD 2D-drawing 3D-file available

General tolerances acc. to: ISO 2768-1 medium (-mK)

Material:

Weight: 55,299

Drawn by: MS

Reviewed by:

Last save: 2021-05-07 15:27

LOGOSOL
Fiskaregatan 2
871 33 Härnösand
Tel: 0611-182 85

Log-loading arm

Sheet no. 1 (1) Issue: 5

Drawing no.: 01-00604

Garp no.:

This document and its contents are the exclusive property of Logosol AB and may not be copied or reproduced or transmitted to a third part, or used for any purpose without written permission.

Detta dokument och dess innehåll äger Logosol AB. Det får inte kopieras, reproduceras eller delas med andra eller utnyttjas för syften som ej skriftligen godkänts.

HYDRAULIC DIAGRAM

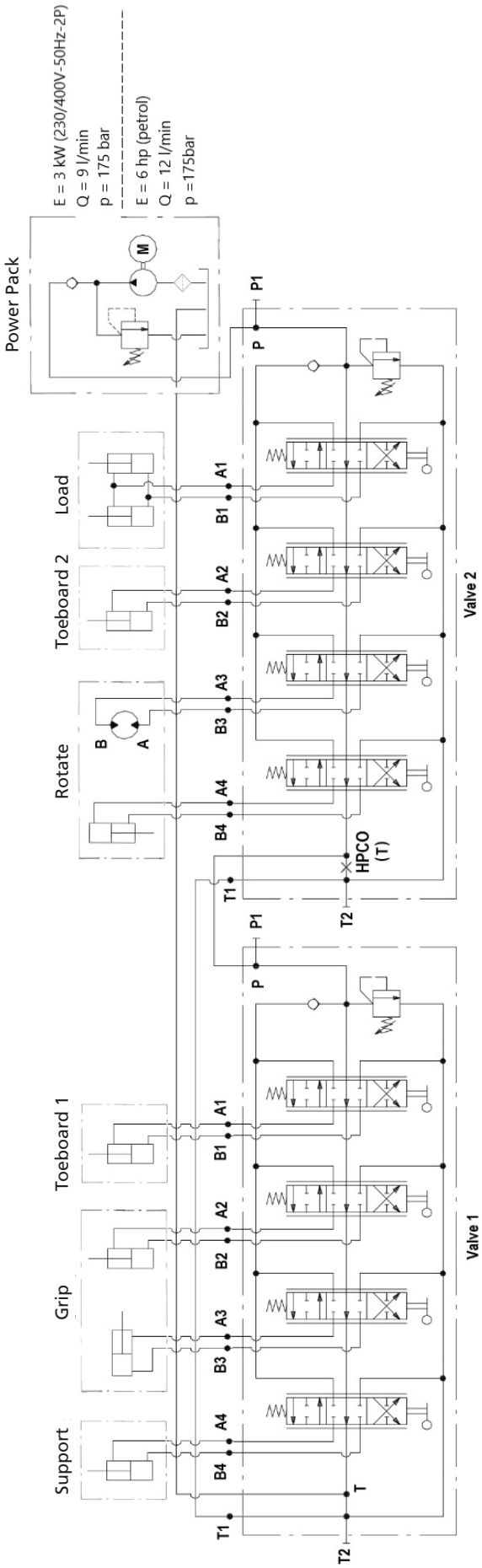

TROUBLESHOOTING SCHEDULE

PROBLEM/SYMPTOM	PROBABLE CAUSE	ACTION
Nothing happens when you activate the levers	Low oil level in the tank Fuse has tripped Incorrect hose connection on the valve Pump motor runs in the wrong direction (Phase-inverted motor)	Check the oil level and refill if necessary Check fuses in fuse cabinets Check connection has been executed as in the manual. Phase-inverted motor in the coupling.
The pump does not start when the power is turned on	Fuses have tripped Connectors not put together properly	Check fuses check connectors
Oil leaking from the machine	Check whether leaking coupling is tightened Check hoses for leaks	Re-tighten loose couplings Replace damaged hoses
One or more functions are perceived to be under-powered.	Low oil level in the tank Leakage in the system Air in the system Damaged hydraulic cylinder	Check the oil level in the tank Re-tighten loose couplings Replace damaged hoses Run the functions one by one until the air is forced out of the system to the tank Run the piston rod out into its end position, turn off the machine. If there is a lot of play in the piston, the gasket and piston control may be broken.
Functions move jerkily	Low oil level in the tank Leakage in the system Air in the system	Check the oil level in the tank Re-tighten loose couplings Replace damaged hoses Run the functions one by one until the air is forced out of the system to the tank
Sawn blocks are not perpendicular	Log supports not aligned Sawmill not aligned	Adjust the log supports perpendicular to the saw bed Check against alignment sequence in the sawmill manual

Declaration of Conformity

In accordance with Directive 2006/42/EC, Annex 2A

Logosol AB
Arkivvägen 6
871 53 Härnösand

hereby declare that **Logosol B1001 Hydraulic**

has been manufactured in conformity with:
Machinery Directive 2006/42/EC, EMC Directive 2014/30/EU

and has been manufactured in conformity with the following harmonised standards:
EN ISO 12100:2010, EN 60204-1:2018,
EN 50370-1:2005, EN 50370-2:2003.

Härnösand, 30 January 2026

Robert Berglund, CEO

LOGOSOL

Arkivvägen 6, SE-871 53 Härnösand
+46 (0)611-182 85 | info@logosol.com | www.logosol.com