LOGOSOL

USER MANUAL

TRANSLATION OF ORIGINAL USER MANUAL

Ref. no. 0458-395-5641
REV: 2

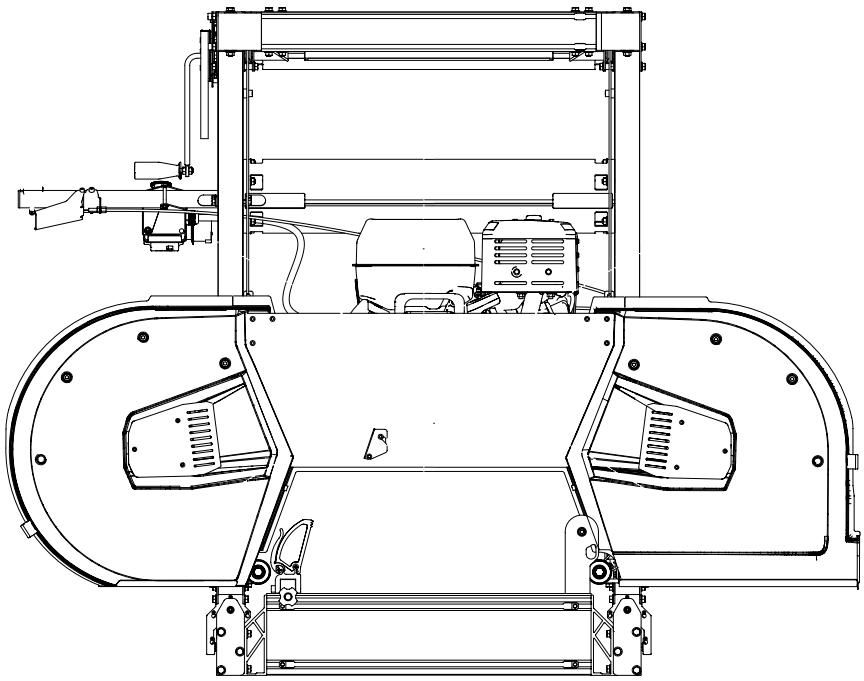

LOGOSOL B701

Read through the user manual carefully and make sure you understand its contents before you use the machine.

This user manual contains important safety instructions.

WARNING! Incorrect use can result in serious or fatal injuries to the operator or others.

EN

LOGOSOL

THANK YOU FOR CHOOSING A LOGOSOL MACHINE!

We are very pleased that you have demonstrated your confidence in us by purchasing this sawmill, and we will do our utmost to meet your expectations.

Logosol has been manufacturing sawmills since 1989. In that time we have supplied approximately 50,000 machines to satisfied customers the world over.

We care about your safety as well as we want you to achieve the best possible results with your sawmill. We therefore recommend that you take the time to carefully read this user manual from cover to cover in peace and quiet before you begin using the saw. Remember that the machine itself is just part of the value of the product. Much of the value is also to be found in the expertise we pass on to you in the user manuals. It would be a pity if that were not utilised.

We hope you get a lot of satisfaction from the use of your new machine.

Bengt-Olov Byström
Founder,
Logosol in Härnösand, Sweden

CE

LOGOSOL continuously develops its products.
For this reason, we must reserve the right to modify
the configuration and design of our products.
Document: LOGOSOL B701 User Manual
Ref. No. User Manual, English: 0000-0000

Last revised:
© 2025 LOGOSOL, Härnösand Sweden

TABLE OF CONTENTS

General Information	4
Description of the Band sawmill	4
Safety Instructions	6
Technical Data	8
Included Components	10
Rail Assembly	14
Rail Adjustment	19
Mounting the sawhead	20
Installation of the motor	35
Order of Adjustments	36
Other Adjustments	41
Sawmill Functions	44
Wiring Diagram	46
Användning	47
Using the Band Sawmill	51
Maintenance	56
Troubleshooting	59
Declaration of Conformity	60

LOGOSOL

GENERAL INFORMATION

This user manual, the instructions of the motor, the assembly instructions of the band sawmill and instructions for accessories should be seen as integral parts of the band sawmill and should always be kept together with it. They should also follow the band sawmill if it is sold.

Responsibility for the band sawmill being correctly assembled and put into operation, and being used in a safe way, lies solely with the person(s) who assembles and uses the band sawmill.

DESCRIPTION OF THE BAND SAWMILL

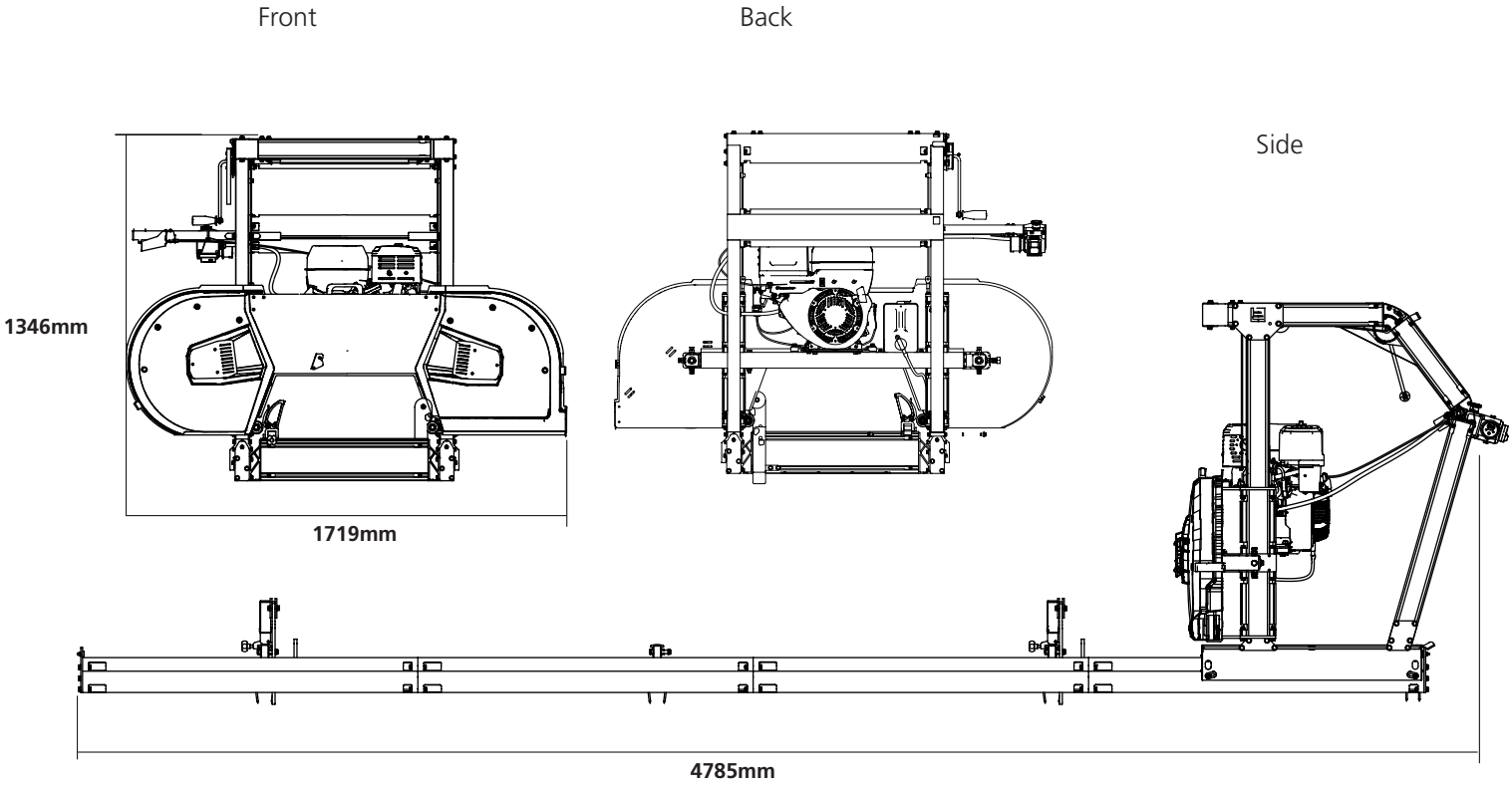

DESCRIPTION OF THE BAND SAWMILL

1 Saw carriage

2 Blade cooling tank

3 Fuel tank

4 Depth-of-cut scales

5 Band wheel guard

6 Push handle/Throttle

7 Sawhead height crank

8 Blade tension handle

9 Cross bunk

10 Log support

11 Log clamp

12 Rail end stop

13 Rail

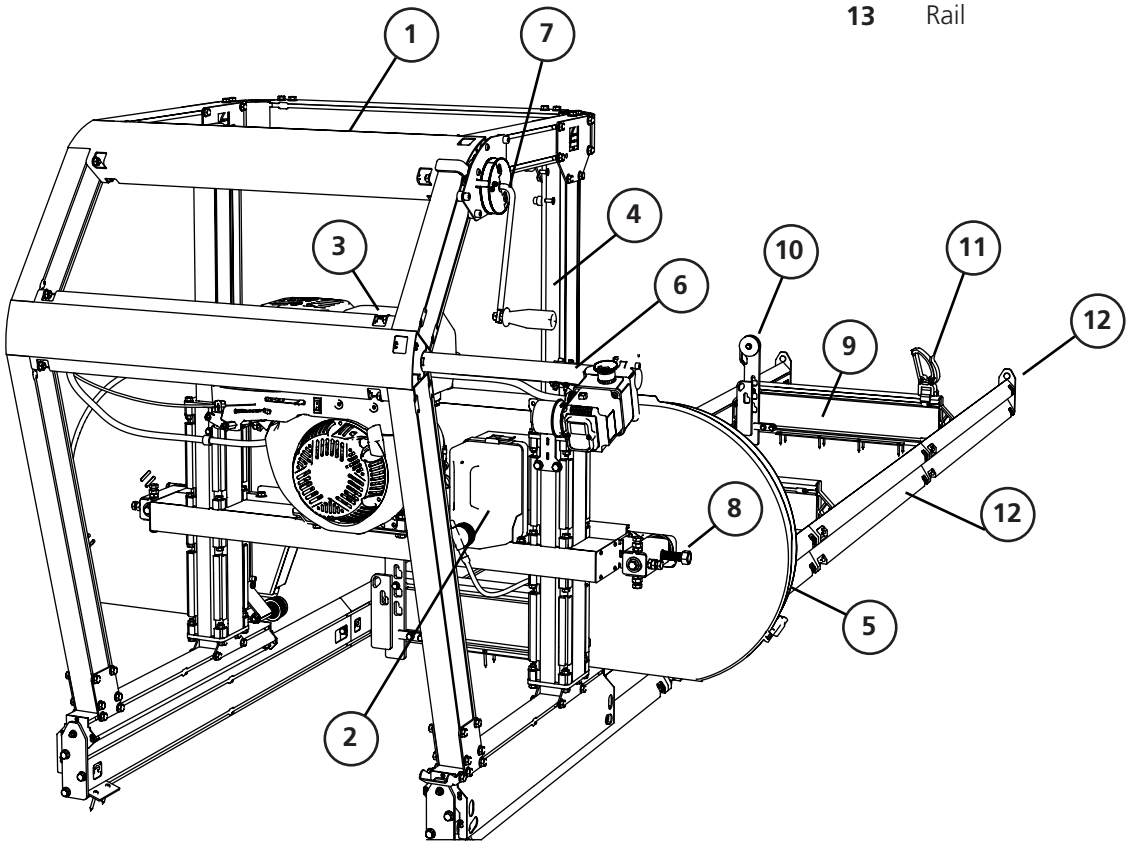

SAFETY INSTRUCTIONS

KEY TO SYMBOLS

WARNING! This symbol means that you should pay particular attention and is always followed by information about the relevant risk.

This symbol is followed by important information or instructions. Pay particular attention when this symbol appears in the manual text.

For your own safety and the safety of others, do not operate the band sawmill or handle band blades without first having read and understood all the contents of this user manual.

WARNING! Cutting tools: Incorrect use can lead to life-threatening injuries. Band blades are extremely sharp and dangerous.

Always use protective gloves (class 1) when working with the band sawmill or handling band blades. Risk of lacerations when handling band blades and some of the plates. Band blades and motor parts may be hot after sawing.

Always use approved hearing protection when working with the machine. Even short exposure to high frequency noise can damage your hearing. Always use closefitting safety goggles when working with the machine or handling band blades. Under certain circumstances the use of respiration protection may be necessary. This would mainly apply if you are sawing dry wood or sawing indoors.

Always wear approved protective footwear with saw protection, steel toe-caps and nonslip soles when working with the machine or handling band blades.

Always wear full-length protective trousers when working with the machine or handling band blades. Never wear loose-fitting clothing, scarves, neck chains, etc., that can get caught in the machine during operation. Secure loose hair before working with the band sawmill.

SAFETY INSTRUCTIONS

THE SAFETY EQUIPMENT OF THE BAND SAWMILL

WARNING! Never use the machine if the safety equipment is defective.

The safety equipment must be checked and maintained.

Here is a description of the safety features of the band sawmill together with their functions.

Interlock safety switch on the band wheel guard
The machine can not be used without having these guards closed.

Rail end stops
Mechanical stops that prevent the saw carriage from rolling off at the end of the rails.

OPERATOR

WARNING! Whenever the machine is used, approved personal protective equipment must always be used.

Persons under the age of 18 may not work with the band sawmill or handle band blades.

Never work with the machine or handle band blades if you are tired, if you have consumed alcohol or if you are taking medication that can impair your vision, judgement, reaction times, mobility, alertness or otherwise cause negative side effects.

THE WORKSITE

WARNING! Never operate a band sawmill with a petrol-powered engine in enclosed or poorly ventilated areas. This can result in death due to suffocation or carbon monoxide poisoning.

Only operate the band sawmill and handle band blades in full daylight or under adequate lighting.

Keep the work area free from clutter, pets, children, obstacles or other things that can distract the operator.

Choose a worksite where the ground is hardpacked and level, with plenty of space for the band sawmill, a pile of logs and sawn timber. If possible, place the band sawmill so that the sawdust blows away from the operator. Set up the band sawmill on level ground with at least 5 m of free space without any obstacles around the equipment. If the band sawmill is to be set up permanently, we recommend that you support the rail frame with concrete plinths or wooden blocks (15 cm x 15 cm) under each cross bunk.

Always keep a hand-held, ABC type (min. 6 kg) fire extinguisher readily accessible at the worksite.

Always keep a fully-stocked first-aid kit easily accessible at the worksite.

LOGOSOL

TECHNICAL DATA

RAILS/BED	
Length of rails, standard	4,6m
Length of rail extension	1150 mm
Track width	800 mm
Total width	856 mm
Height	165 mm
Weight	85 kg
SAW CARRIAGE	
Length	1020 mm
Width	1720 mm
Height	1305 mm
Weight	100 kg
Volume of water tank	5 liter
Feed rate	Manuell
CAPACITY	
Max. log diameter	701 mm
Max. sawing width	643 mm
Effective sawing length (standard)	3800 m
BAND BLADE	
Type and size	3843x33 delning 22 mm
Band wheel diameter	500 mm
Band wheel rotation speed	1000 v/min
Blade speed	30 m/s
SAWMILL MOTORS	
Electric motor	4,6 kW, 400 V
Petrol engine	Briggs & Stratton 13,5 hk
Volume of fuel tank	5 liter
SOUND LEVELS/VIBRATIONS	
Equivalent sound pressure level in the operator's area 1)	88,4 dB(A)
Sound power level (estimated) 2)	109.4 dB(A)
Vibration level in handle 3)	<2,5 m/s^2

1) The typical distribution measurement for equivalent sound pressure level is a standard deviation of 2 dB(A).

2) The typical distribution measurement for sound power level is a standard deviation of 3 db(A).

3) The typical distribution measurement for the vibration level in the handles is 1 m/s^2.

BOLTS & NUTS

Definition of fasteners on following pages.

Shoulder bolt

Phillips bolt

Slotted bolt

Set screw

Hex nut

Flange nut

Flat washer

Allen bolt

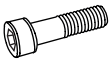

Partial thread Allen bolt

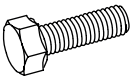

Hex bolt

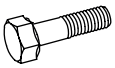

Partial thread hex bolt

Flange bolt

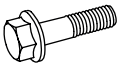

Partial thread flange bolt

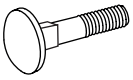

Carriage bolt

ADDITIONAL SYMBOLS

The following symbols are used as supplements to the symbols above to describe the design or function of the fasteners.

Low Tensilock Lock Countersunk Dome

DIAMETER & LENGTH

The size of a fastener is written as a diameter measurement **(M)** ISO 68-1. For bolts, this is followed by a length measurement. The length of the bolt is measured from below the head to the tip of the bolt.

(Diameter)		**(Length)**
M8	x	20

When this symbol appears during assembly, parts must be lubricated before installation. Lubricate affected parts with universal grease.

This symbol describes the recommended lifting point for heavy lifts.

This symbol describes the sawing direction and reappears during assembly.

Screw the joint finger-tight.

LOGOSOL

TIGHTENING TORQUE SCREWS/NUTS

It is recommended to tighten all fasteners during assembly using a torque wrench. The table below shows the tightening torques for the most common dimensions. Note that bolted joints must always be tightened on the nut side whenever possible.

8,8		
M5	**5,7NM**	**6NM**
M6	**9,8NM**	**10,4NM**
M8	**24NM**	**25,5NM**
M10	**47NM**	**50NM**
M12	**81NM**	**86NM**

COMPONENTS

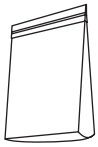

01-01153-skp

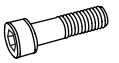
16 x – M8x65

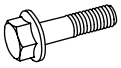
8 x – M8x90

26 x – M8

64 x – M8x12

72 x – M8

2 x – M8x20

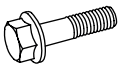
2 x – M8x70

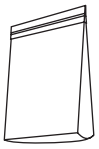

01-01080-skp

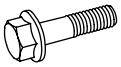
18 x – M8x50

30 x – M8

4 x – M6

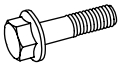
12 x – M8x35

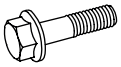
3 x – M8x60

12 x – M8x16

24 x – M8

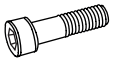
9 x – M8x40

28 x – 5x40

18 x – M8

6 x – 04-00817

3 x – 03-04025

01-01080-DIV

4 x – 03-04061

4 x – 03-04062

2 x – 03-03896

01-01153-DIV

2 x – 03-04086

2 x – 03-04085

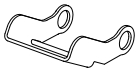

1 x – 03-03918

2 x – 03-03972

1 x – 9037-012-0005

6 x – 03-03948

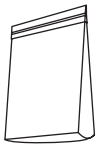

01-01152-skp

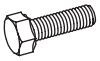

2 x – M10x25

2 x – 11x35x3

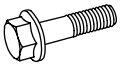

1 x – M10x80

1 x – M10

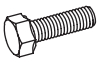

6 x – M10x35

6 x – M10

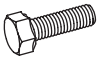

4 x – M8x14

4 x – M8

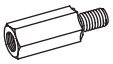

1 x – M6x40

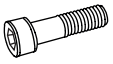

1 x – M6x50

1 x – M6

4 x – 03-03903

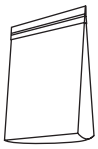

01-01181-skp

23 x – M6

15 x – M6

6 x – M6x25

2 x – M8

2 x – M8x20

8 x – M6x12

2 x – M6

10 x – M6x12

1 x – M6x16

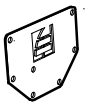

4 x – 03-04054

4 x – 03-04056

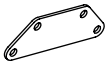

4 x – 03-04055

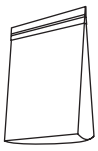

01-01125-skp

10 x – M8

2 x – M8x12

4 x – M8x30

4 x – M8x20

6 x – 03-04064

1 x – 08-0022

LOGOSOL

00-00134-DIV

4 x – 04-00787

1 x – 04-00423

1 x – 03-04049

10 x – 9034-011-0001

2 x – 03-04035

2 x – 6600-001-3023

2 x – 03-04057

2 x – 04-00813

2 x – 9321-635-1612

2 x – 03-04088

2 x – M8x80/80

2 x – M8

1 x – 03-04011

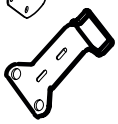
1 x – 03-04039

01-01152-DIV

2 x – 9025-015-0030

1 x – 03-02610

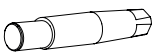
1 x – 0302612

1 x – 9030-013-0001

1 x – 03-03913

01-01152-DM

1 x – 04-00791
1 x – 04-00815

2 x – 03-03908

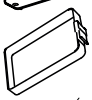
1 x – 1005177A

1 x – 9038-012-0001

1 x – 04-00792

01-01131 2x

1 x – 03-03964

1 x – 9291-020-0005

2 x – 03-01454

1 x – 03-03958

1 x – 03-04019

1 x – 03-04018

1 x – M8x30

1 x – M8

2 x – M8

2 x – M8

2 x – M8x25

00-00134

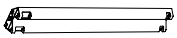

8 x – 03-03957

3 x – 03-03947

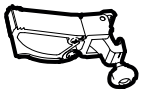

2 x – 4508-001-1027

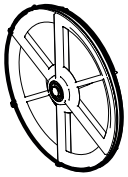

2 x – 01-00485-13

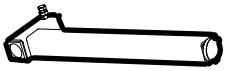

1 x – 02-00590

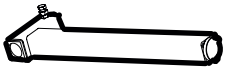

1 x – 02-00589

1 x – 02-00593

1 x – 03-03970

1 x – 03-03968

2 x – 03-03967

01-01147

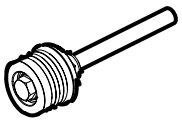

2 x – 01-01147

00-00134

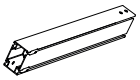

2 x – 03-03966

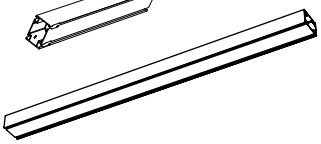

2 x – 03-03969

2 x – 03-03971

1 x – 03-03943

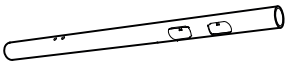

1 x – 03-03973

1 x – 03-04080

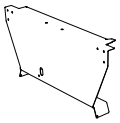

1 x – 03-03895

1 x – 03-03872

1 x – 03-03871

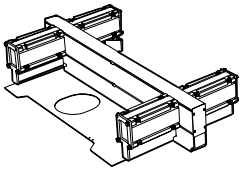

1 x – 01-01148

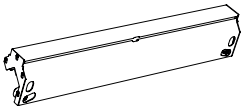

2 x – 01-01110

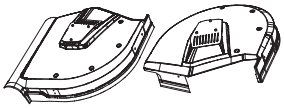

1 x – 01-00963, 01-00964

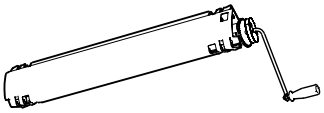

1 x – 01-01125

ASSEMBLY OF RAIL FRAME

Start assembling the sawmill by mounting the rails. The sections of rail are place under the saw head in the pallet. Assembly involves heavy lifting and it requires two people to help with the work.

WARNING! Heavy lifting! Risk of injury.

Two people should always help with heavy lifting.

WARNING! Risk of crush injuries.

Always wear protective gloves and handle the motor carefully when placed on the motor shelf.

EXTRA EQUIPMENT:

There are accessories for this machine that may affect the sequence of assembly in this manual. Read through the assembly instructions in the various manuals before starting work to get an overview of the different procedures.

SETUP:

The goal of assembling and adjusting the sawmill rail is to achieve a flat, horizontal rail with parallel sections and as seamless joints between the sections as possible. A well-leveled rail is essential for achieving accurate sawing results. Be sure to prepare a flat and stable surface for setup. The rail must be supported beneath the cross bunks—the load from the logs must not rest directly on the rail sections.
The sawhead and the carriage is then adjusted according to the rail; the sawing result will depend on how well the rail is aligned.

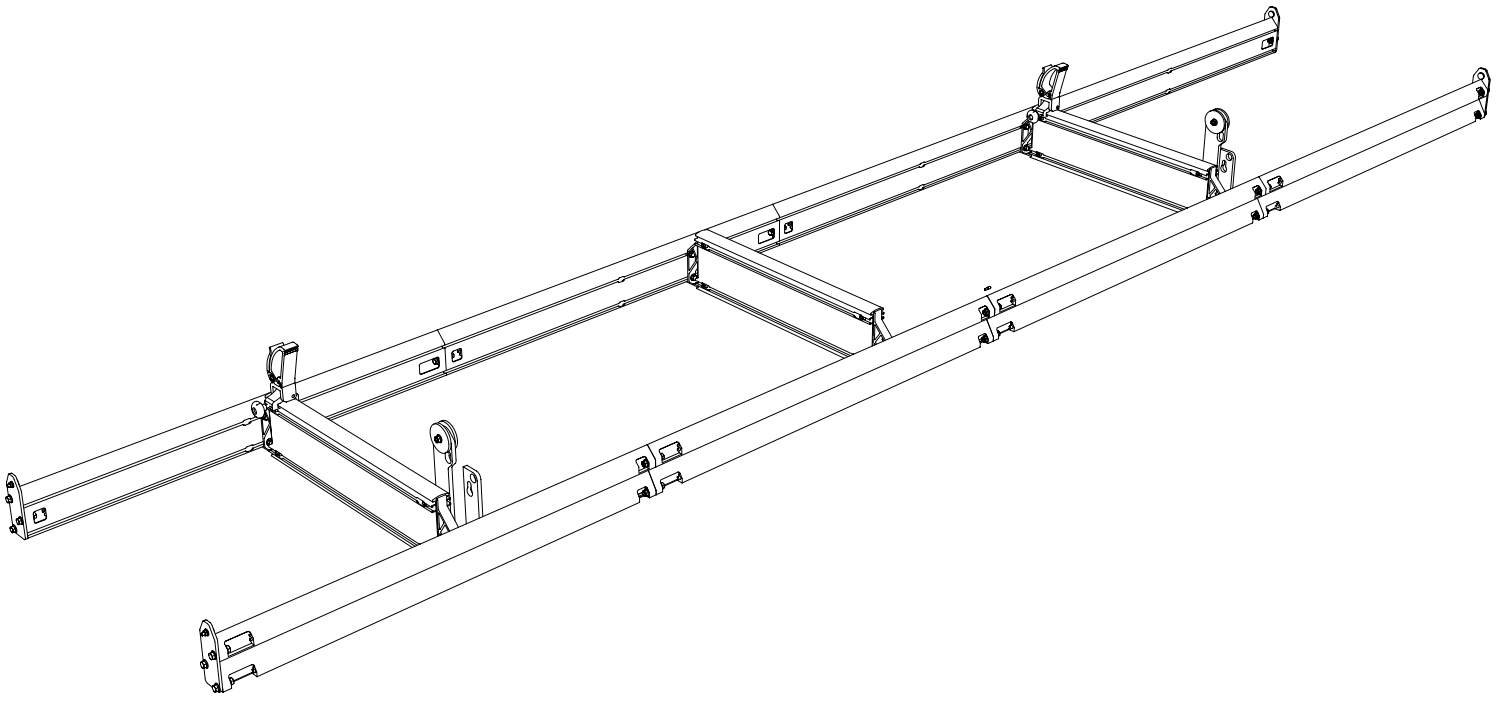

00-00134-DIV

1

Make sure to adjust the rail sections so the joints between them are as smooth and flush as possible

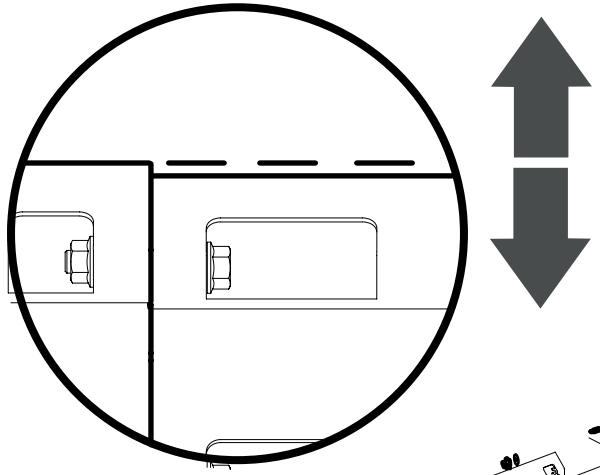

18x – M8x50

18x – M8

18x – M8

6x – 4x30

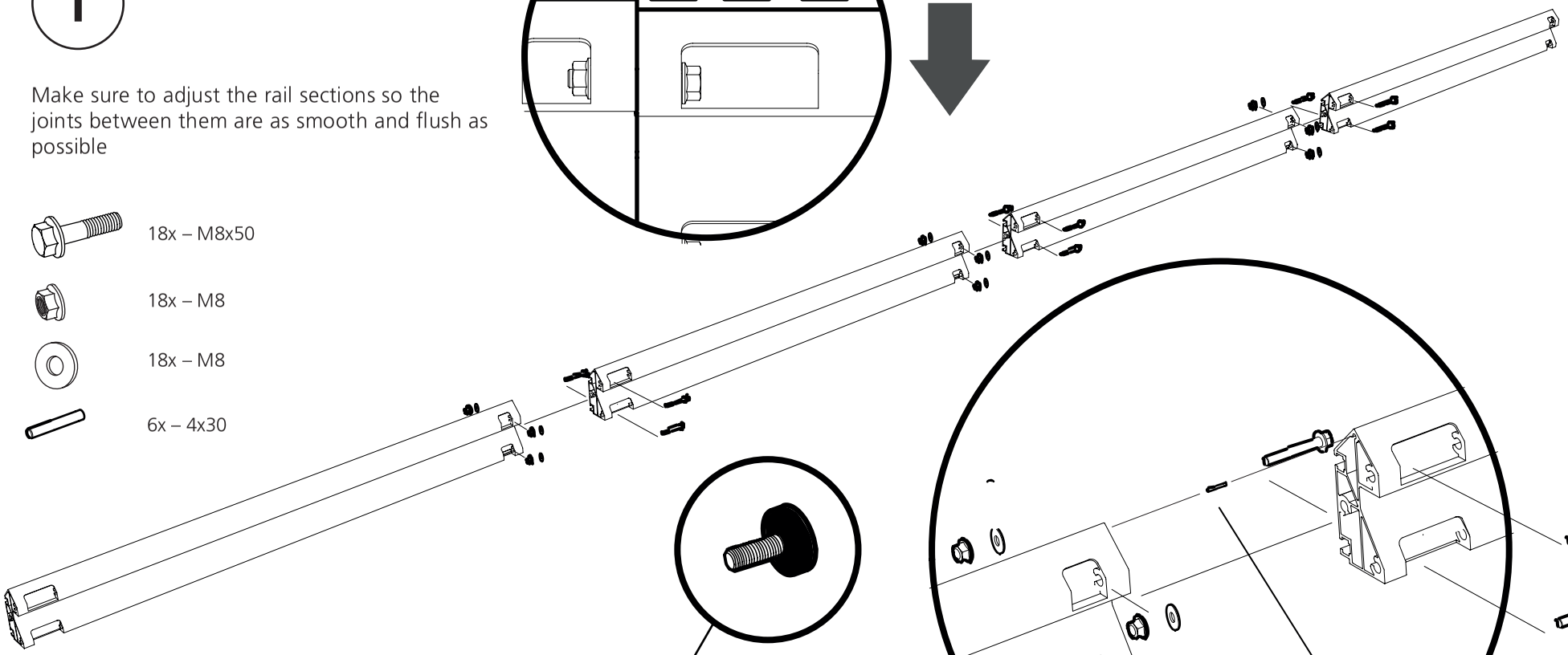

2

12x – M8x35

12x – M8

4x – M6

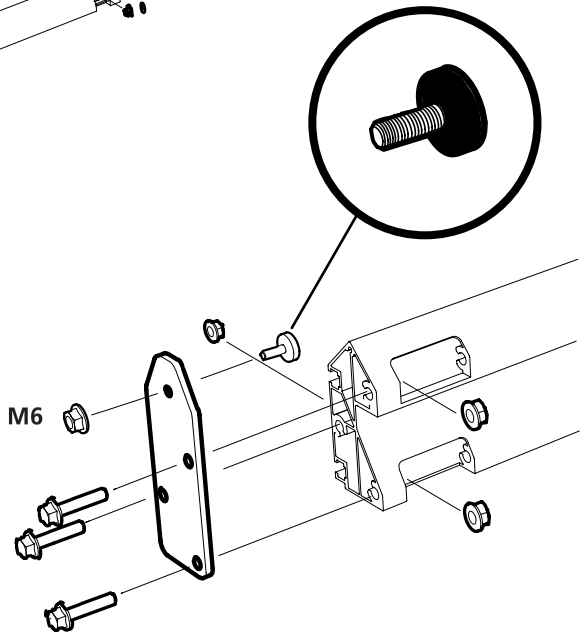

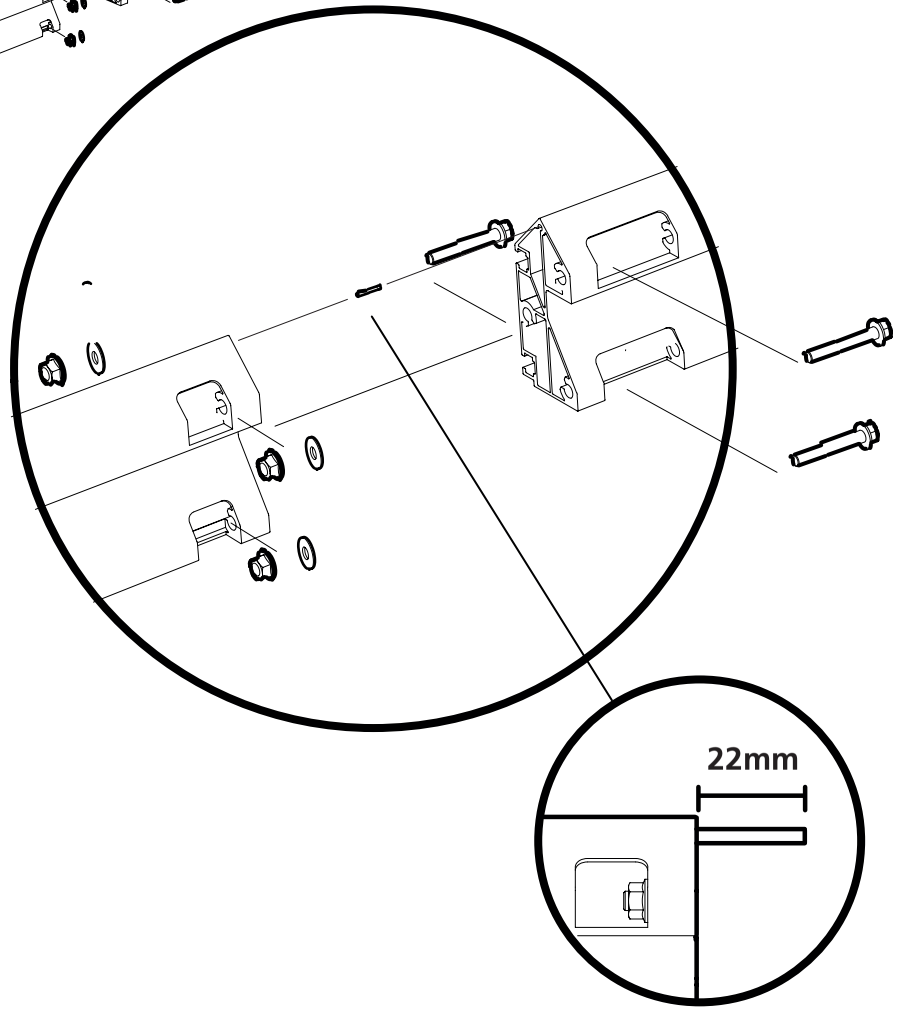

LOGOSOL

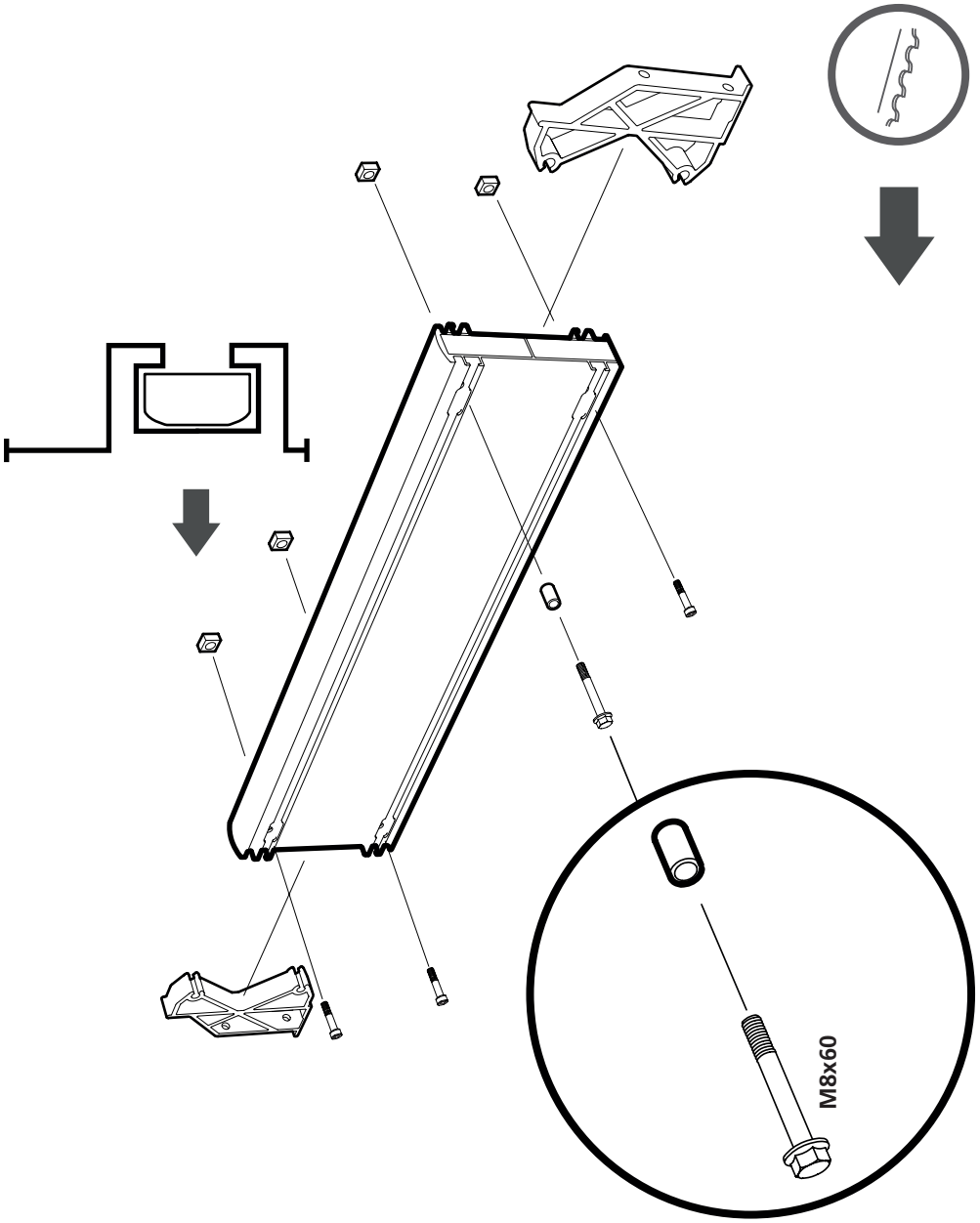

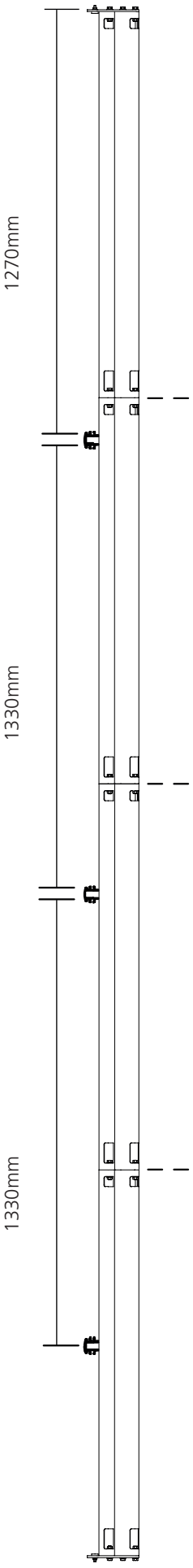

3

3x – M8x60

9x – M8x40

12x – M8

2 x – 12x08x21

4

12x – M8x16

12x – M8

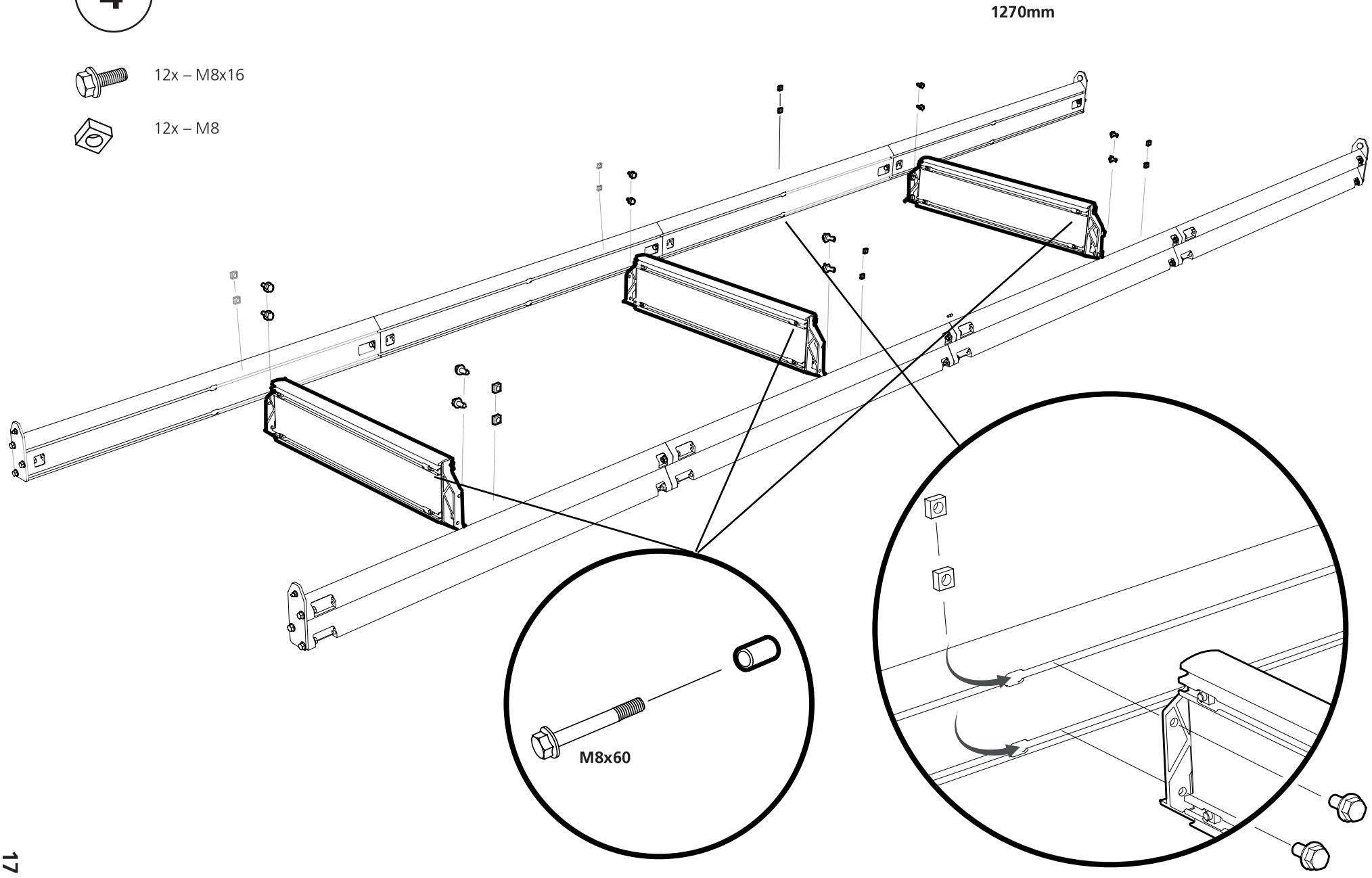

LOGOSOL

5

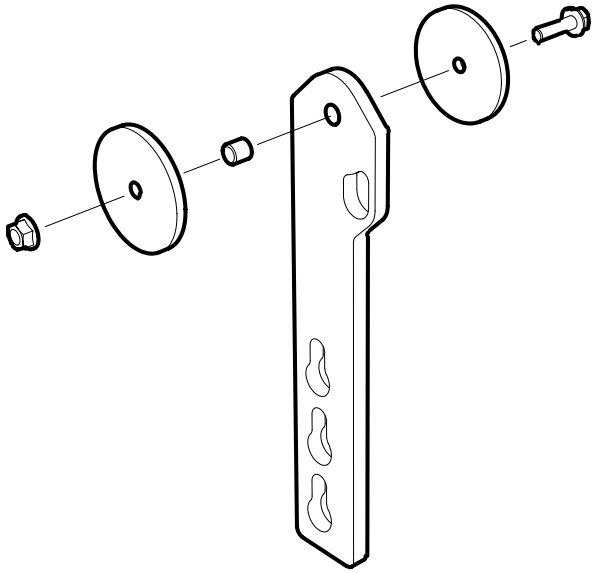

2x – M8x30

2x – M8

2 x – 12x08x21

6/7

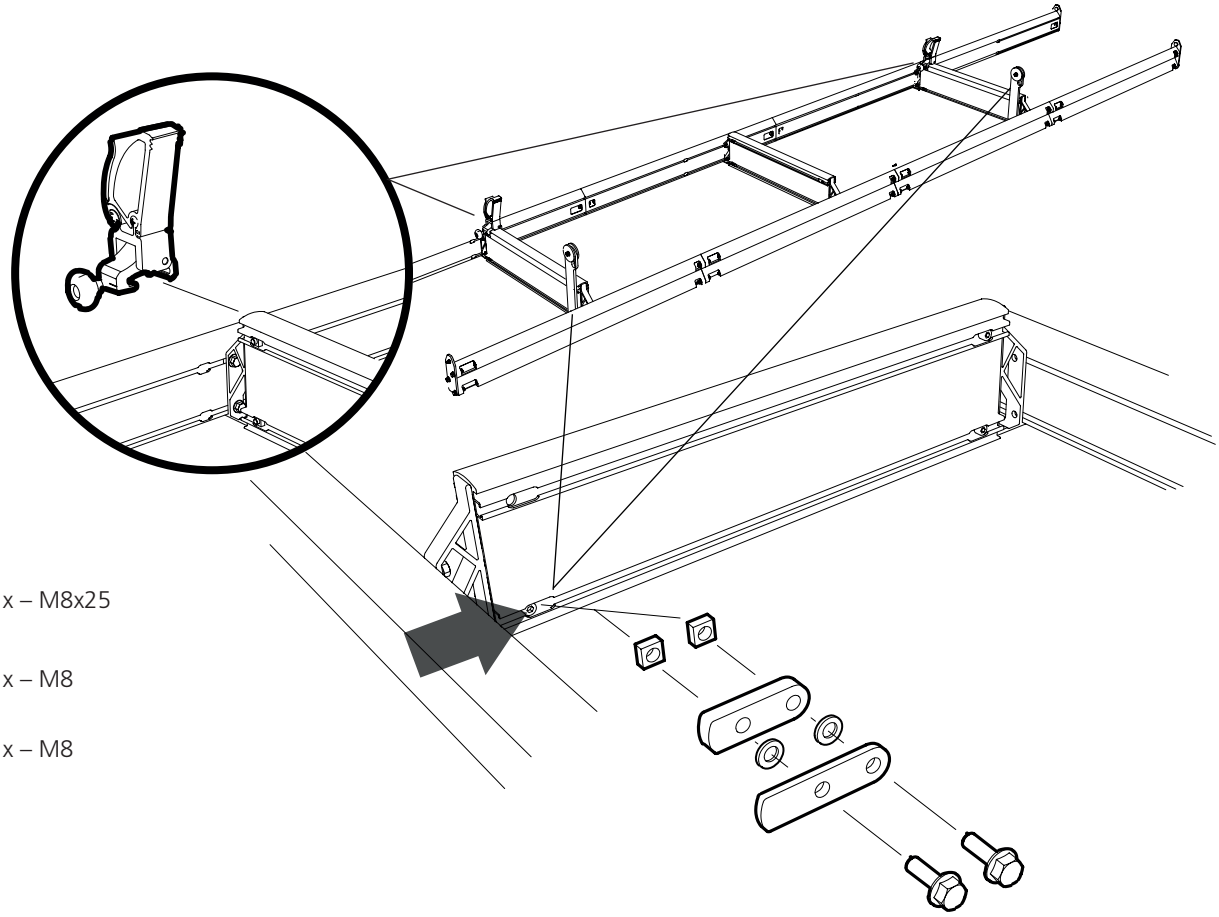

6 x – M8x25

6 x – M8

6 x – M8

8

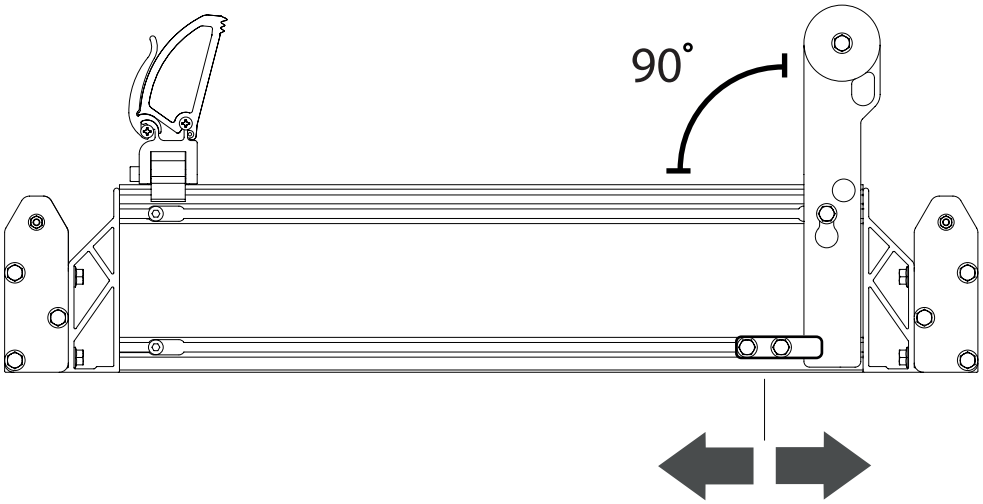

ADJUSTING THE RAIL FRAME

To ensure proper rail function, it is important that it is completely flat. It must be placed on a stable surface with support directly beneath the log supports. Logosol recommends placing the supports on squared timbers, 100x100 mm.
The weight of the logs must not stress the rail sections. Prepare the setup site so the squared timbers are parallel and level, both lengthwise and across. This makes it possible to move the sawmill later while leaving the support base in place.

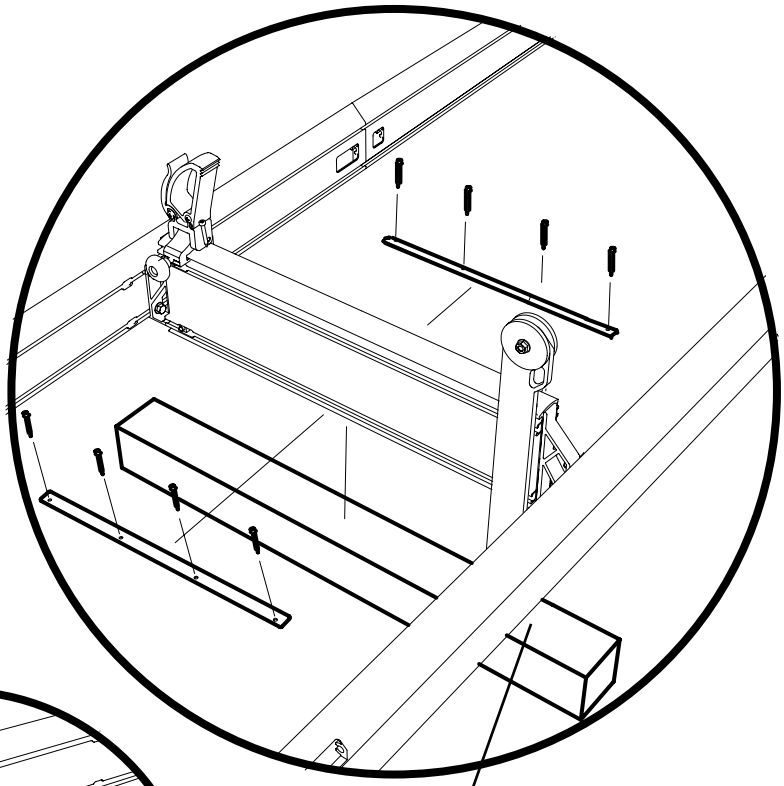

24x – 4,8x40

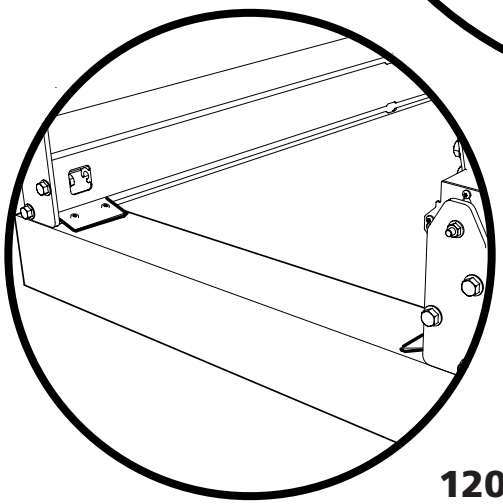

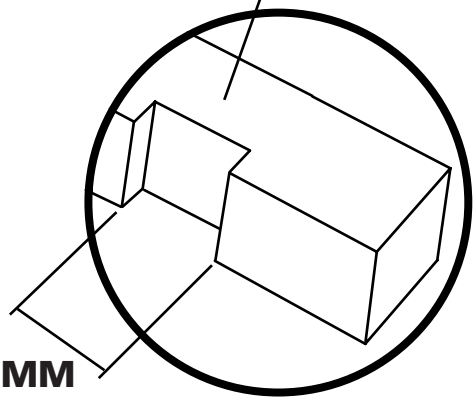

ADJUST THE LEVELNESS OF THE RAIL FRAME

To ensure a good sawing result, it is important that the rails are completely level. Earlier, we have adjusted the levelness along the long sides of the rail frame. Now the rail frame is to be adjusted on its short sides. Place a spirit level on a cross bunk and adjust the levelling feet until the rails are on a level. Repeat this procedure on all cross bunks until the rails are on a level along the whole length of the rail frame.

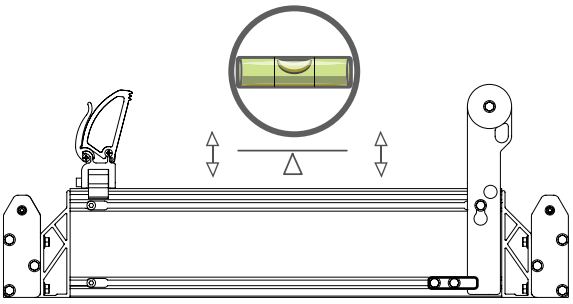

Important!

This step is crucial for the precision of the sawmill. Be careful and put some extra time into this step.

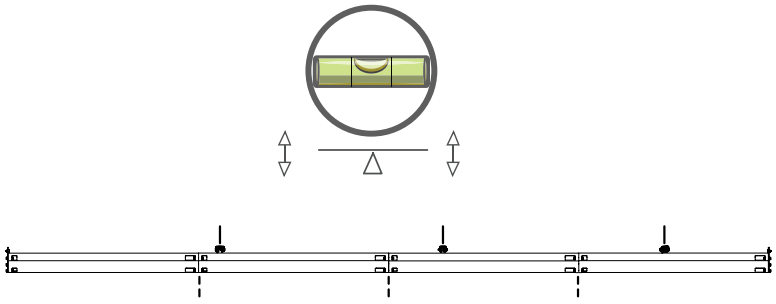

MOUNTING THE SAWHEAD

Assembly begins with mounting the rail. The rail parts are packed underneath the sawhead. The assembly involves heavy lifting, and two people are required to carry out the installation safely.

WARNING! Heavy lifting – risk of injury.

Always have two people for heavy lifting.

WARNING! Risk of crushing injuries

Wear protective gloves and handle the motor carefully when placing it onto the motor bracket.

ASSEMBLY OBJECTIVE:

The goal of assembling and adjusting the sawhead is to achieve a stable saw carriage where both the bandsaw wheels and blade guide rollers are aligned so the blade runs parallel to the rail. A properly adjusted sawhead is crucial for achieving good sawing results. Pay close attention during installation and adjustment — the quality of the cut will reflect how well the saw has been aligned.

9

Place the top of the decal so that it aligns with the edge of the pylon tube. The highest number must face upwards. Position the scale on the rear narrow side of the tube.

16 x – M8x12

16 x – M8

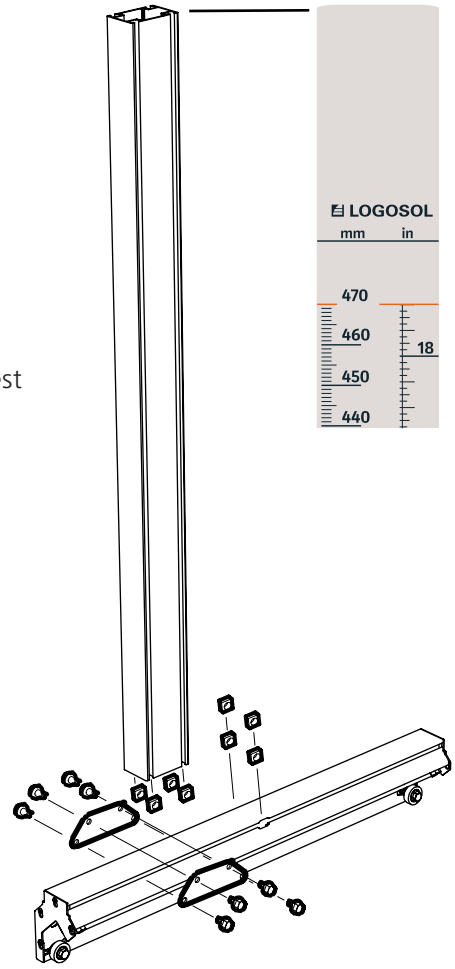

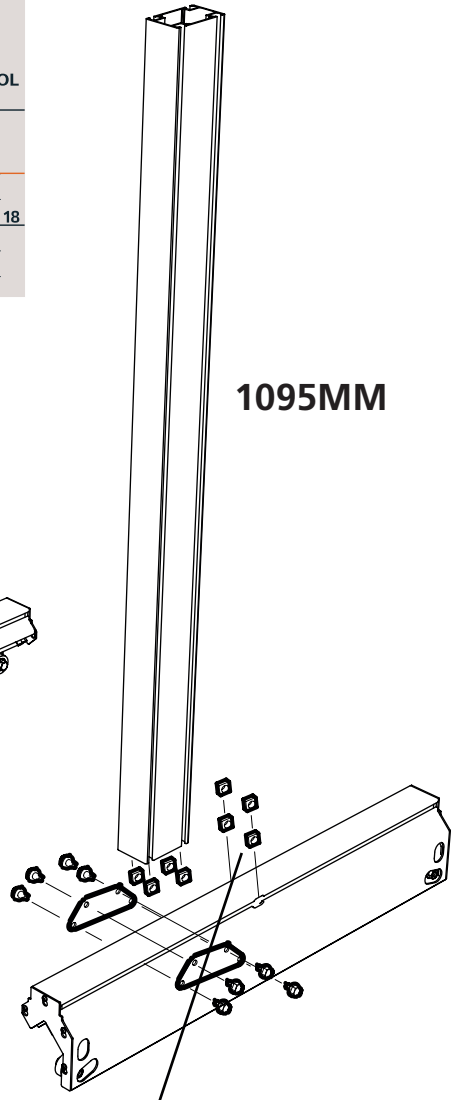

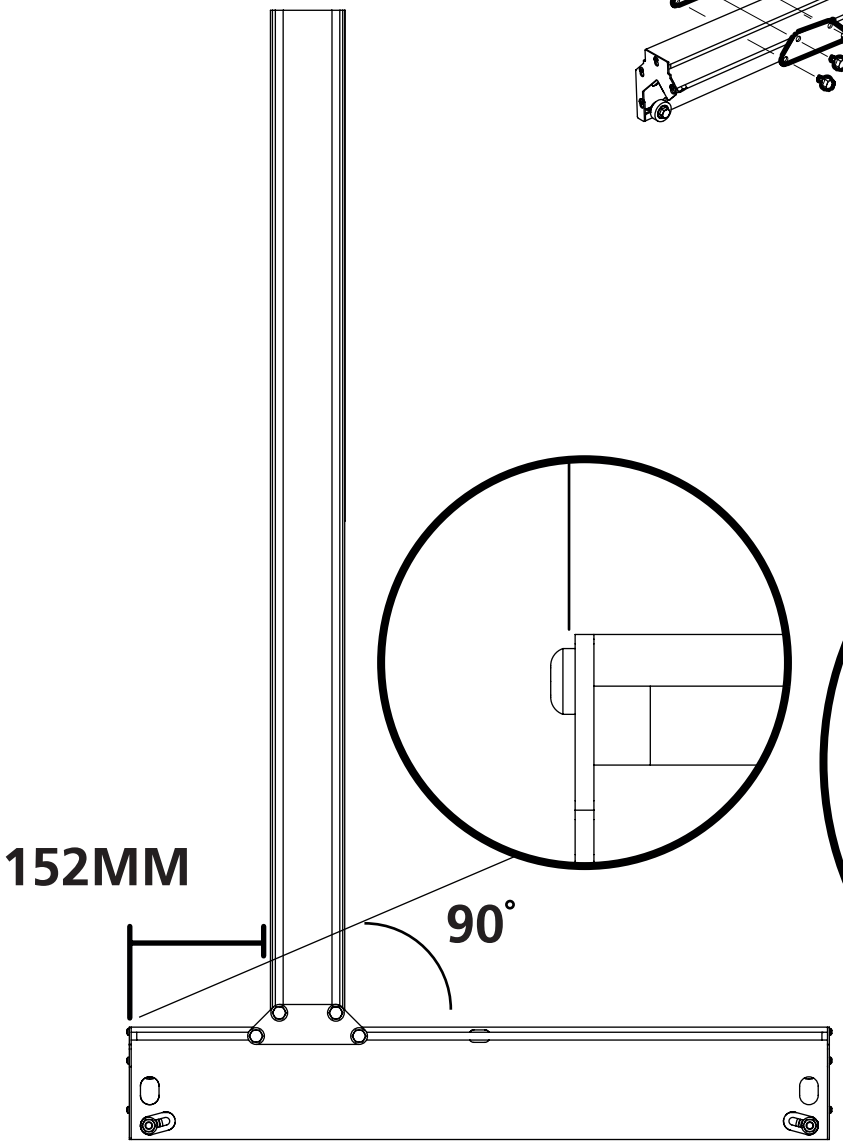

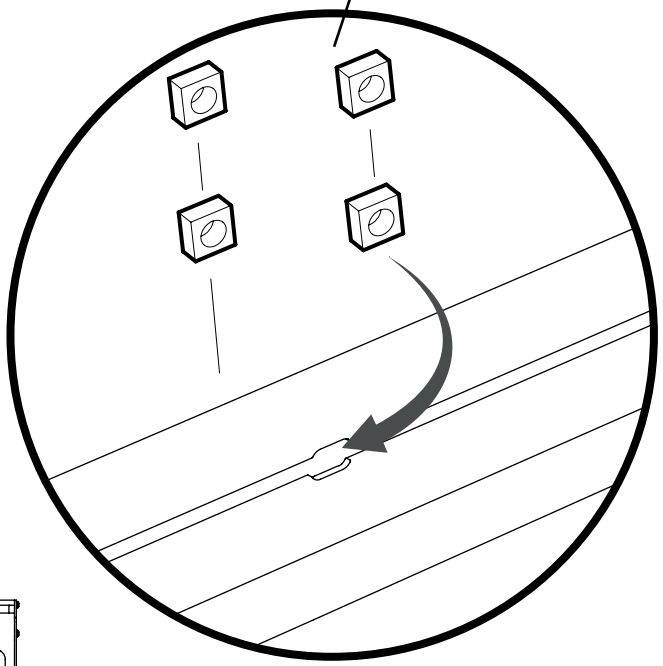

LOGOSOL

10

The M10x80 screw secures the sections position. Tighten the nut only until the nylon insert grips the screw. Lubricate all moving parts that are installed in the motor bracket.

01-01152-DIV

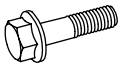

1x – M10x80

1x – M10

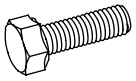

6x – M10x35

6x – M10

Note that the shims must be positioned in and above the saw direction. Start by placing the 1 mm shims on the side facing this direction in the picture, then continue on the back side. Place shims on the remaining sides if there is still clearance. The shafts must be able to move freely inside the tube. On the side where the M10x80 screw is located, the shims must be installed before the screw is mounted.

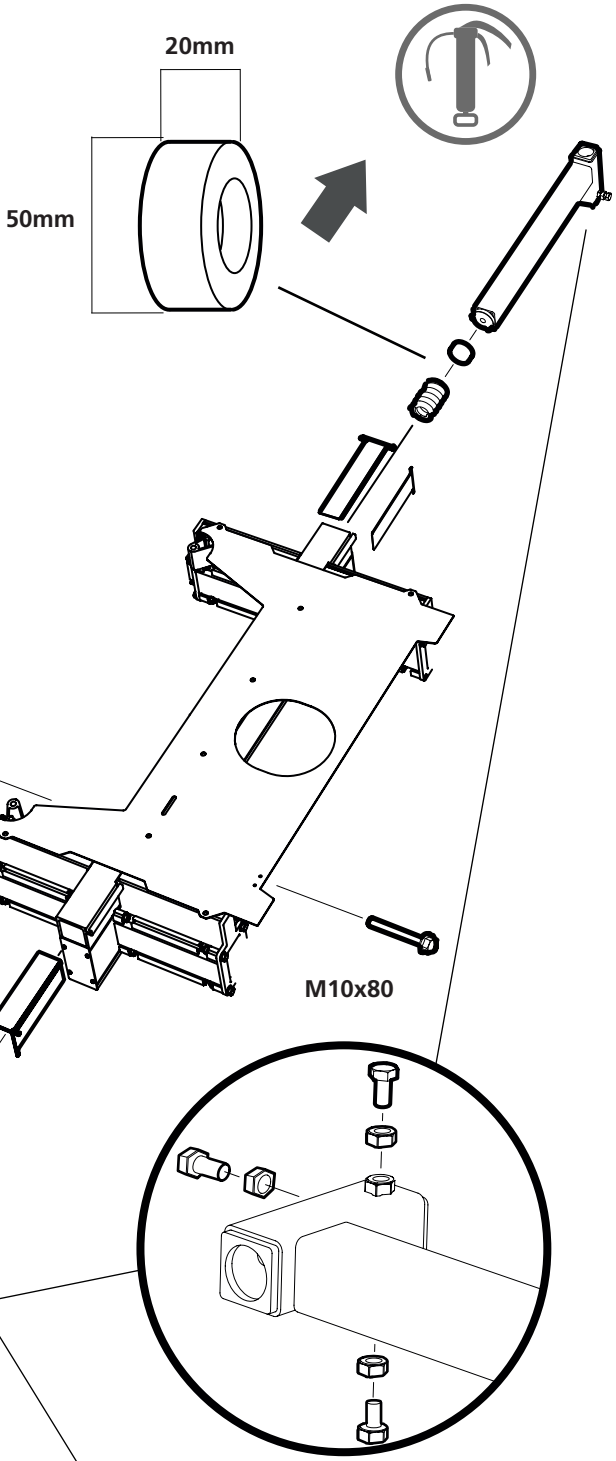

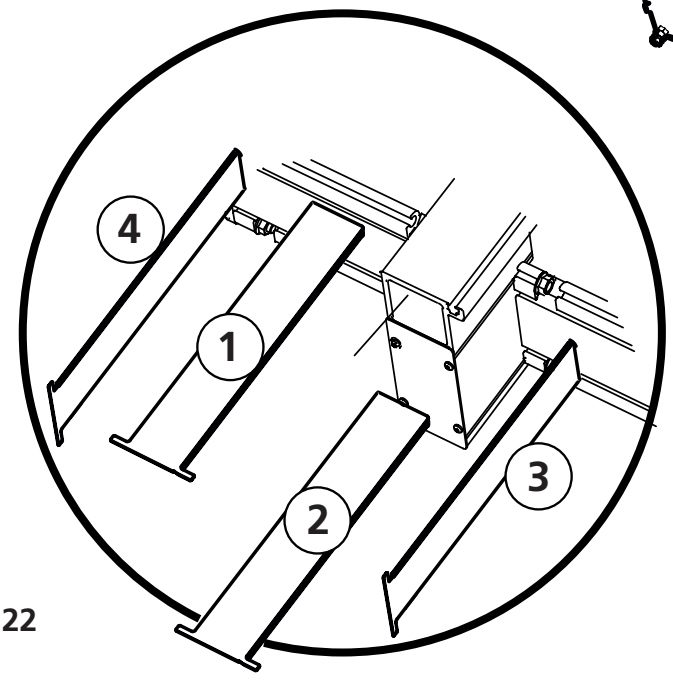

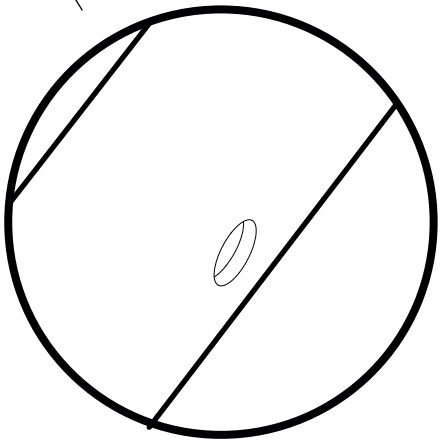

11

10x – M6x12

10x – M6

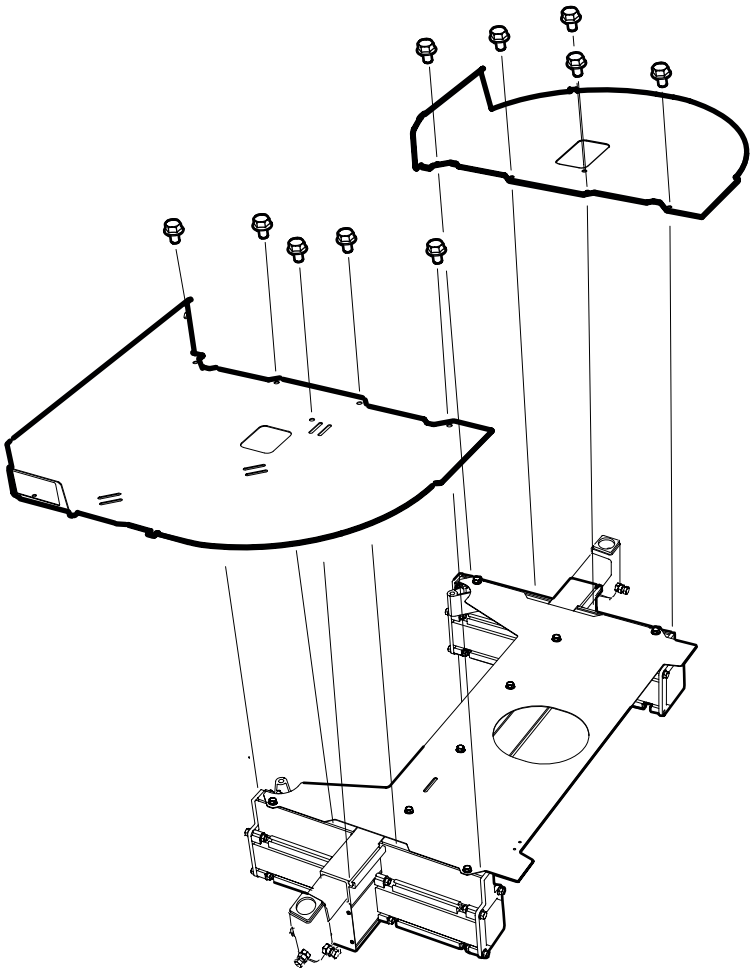

12

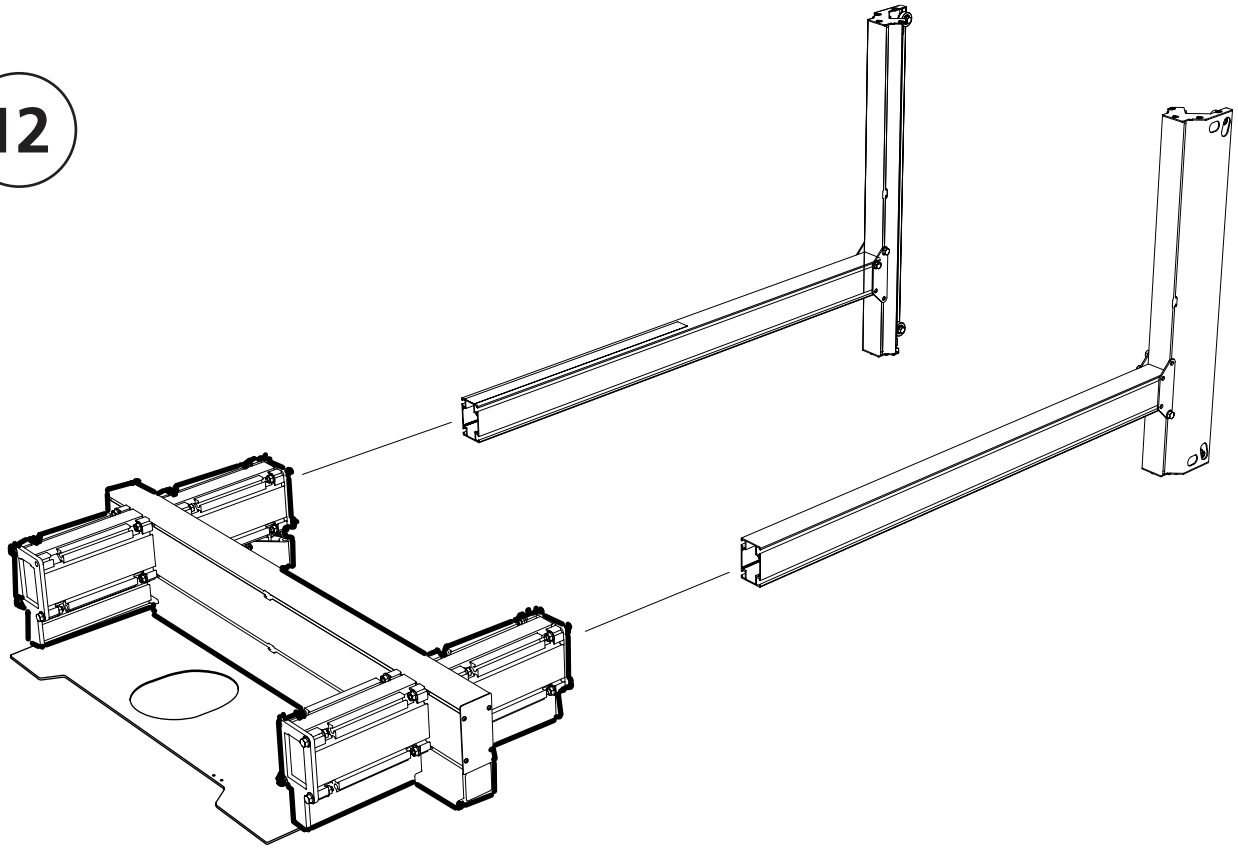

13

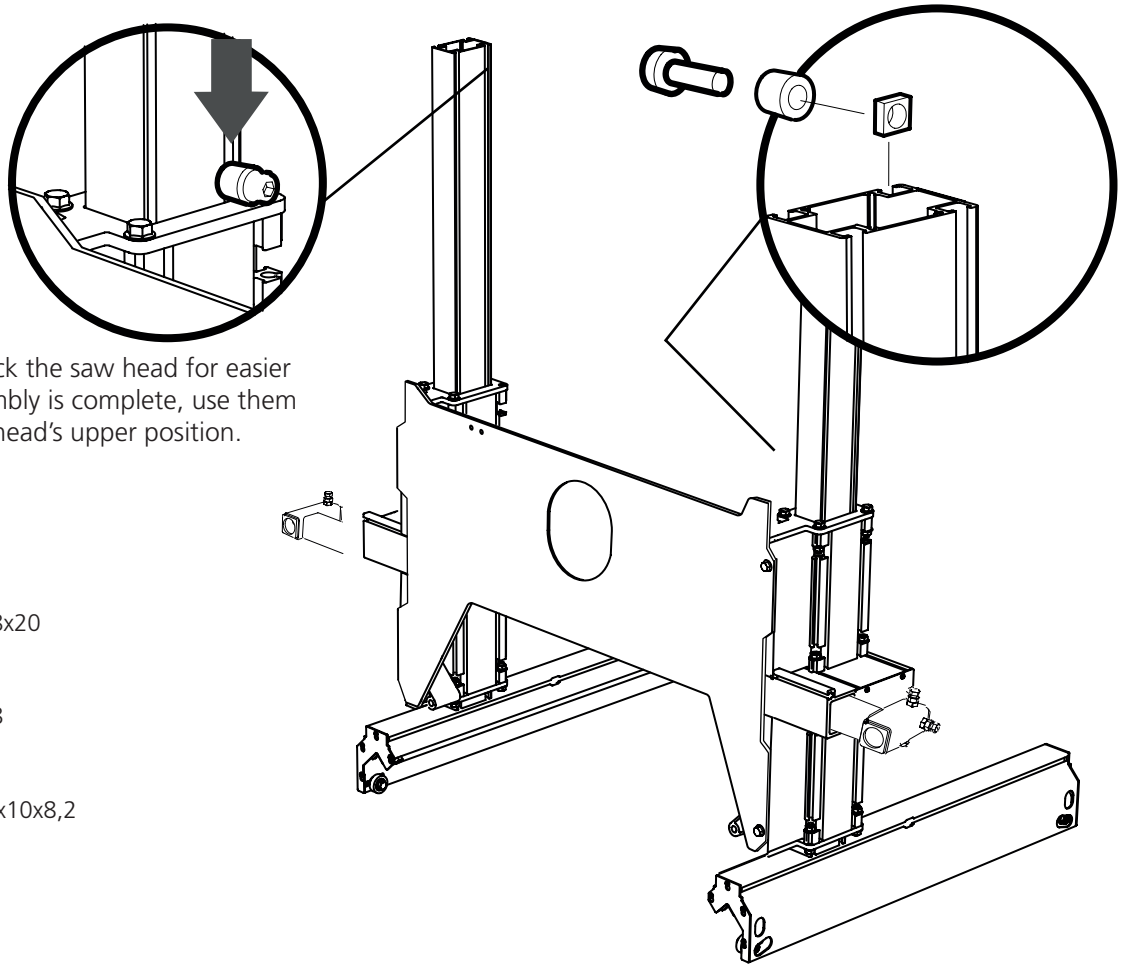

Use the spacers to lock the saw head for easier handling. Once assembly is complete, use them as stops for the saw head's upper position.

2 x – M8x20

2 x – M8

2 x – 18x10x8,2

14

Remove the guide wheels before mounting the saw carriage on the rail. Reinstall the guide wheels afterwards.

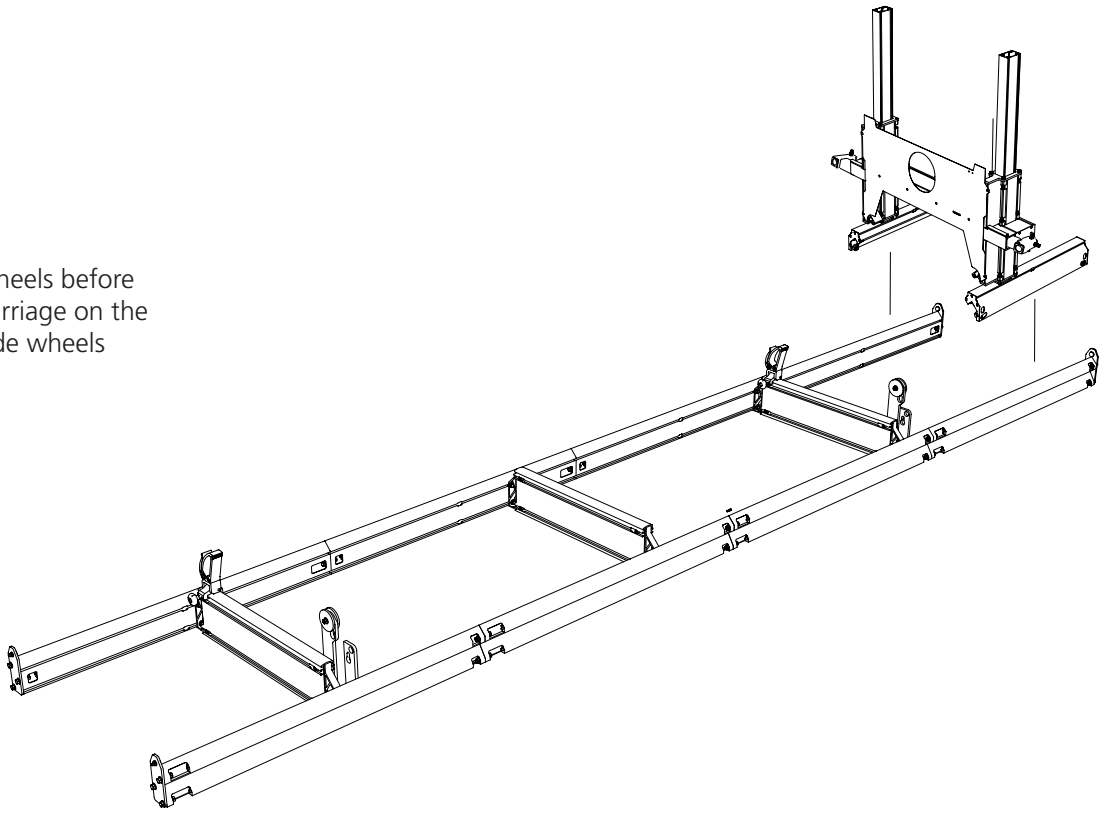

15

To improve the function of the felt wiper, it is recommended to prep it with kerosene (lamp oil) before use.

When mounting the rail wheels, (on the underside of the rail) ensure the wheels only make contact with the surface — misalignment during installation can create excess tension between the bogie and the rail.

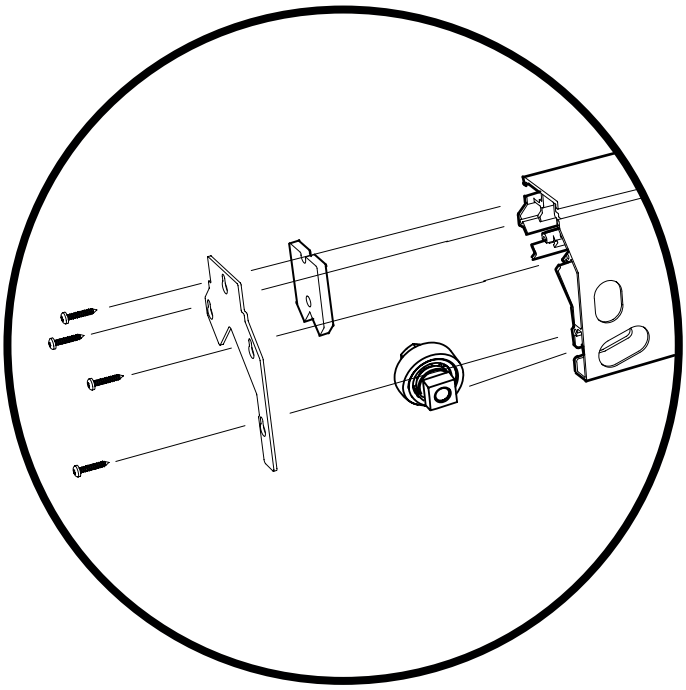

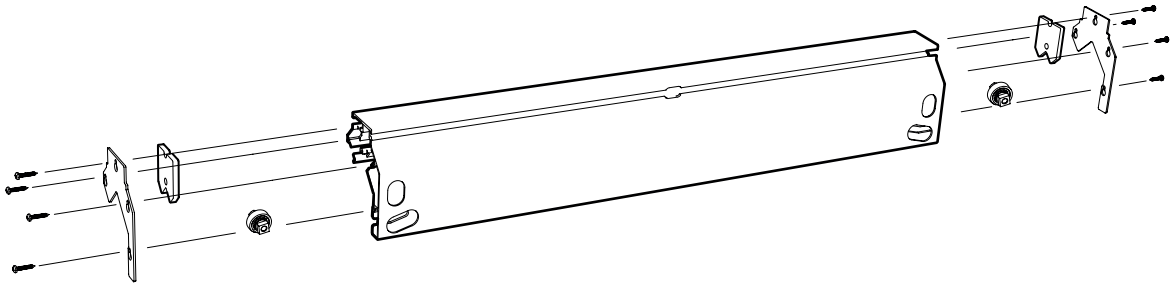

16

2x – M8x12

2 x – M8

2 x – 12x4x8

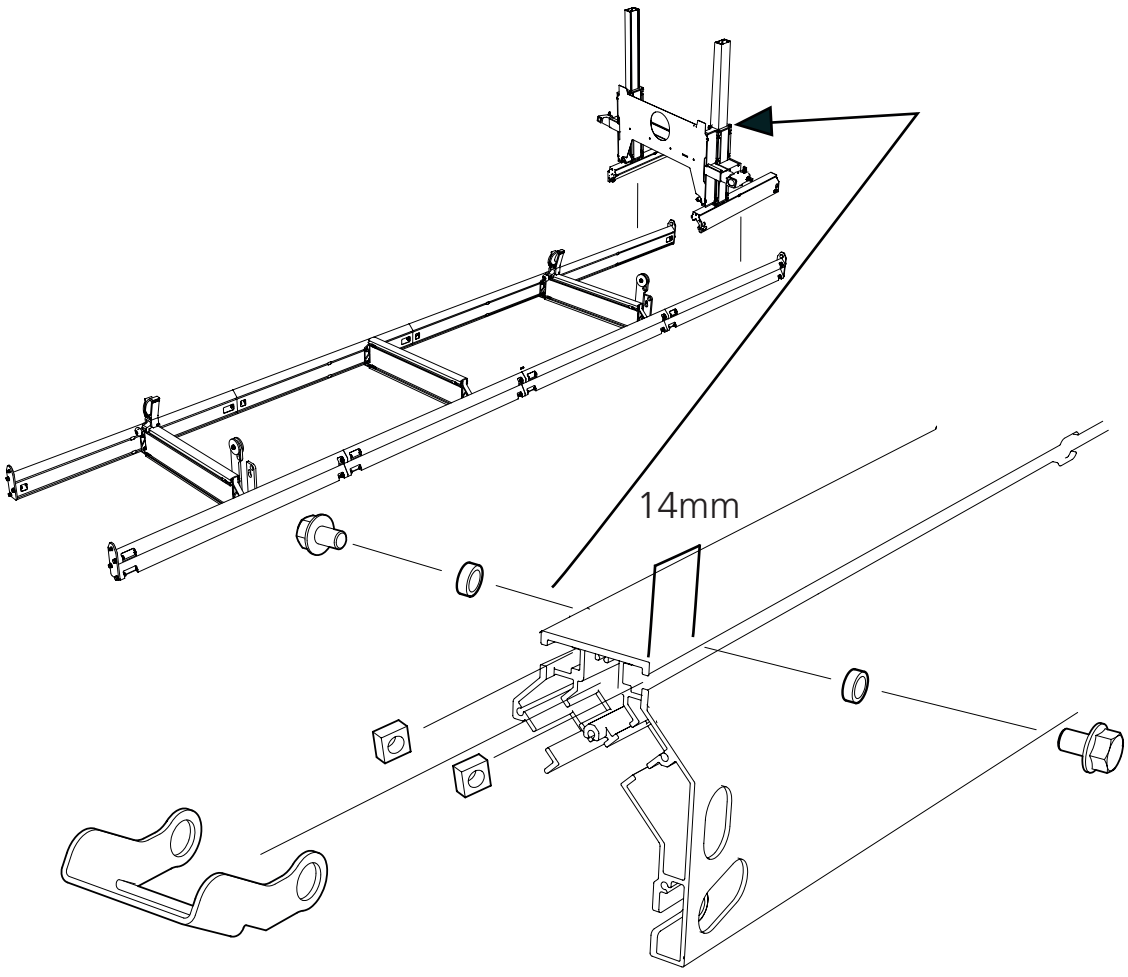

LOGOSOL

17

To assemble the upper reinforcement section with the upper rear braces, you must loosen the cable suspension to access the screw behind the crank plate.
Pull out the crank so the screws fit, then return it to its starting position and secure the cable attachments. Grease the crank bushings with multipurpose grease.

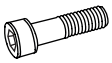

8 x – M8x65

8 x – M8

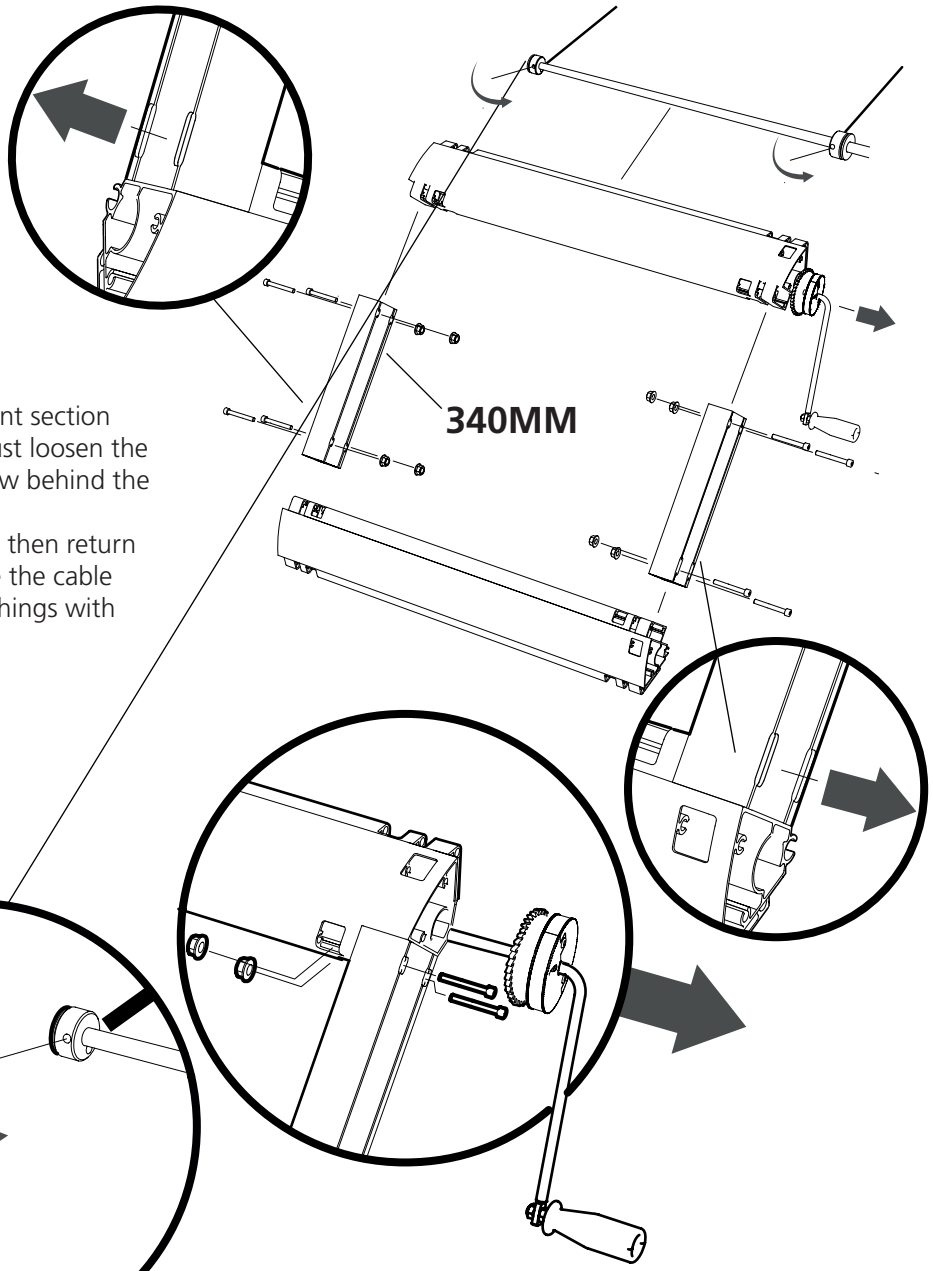

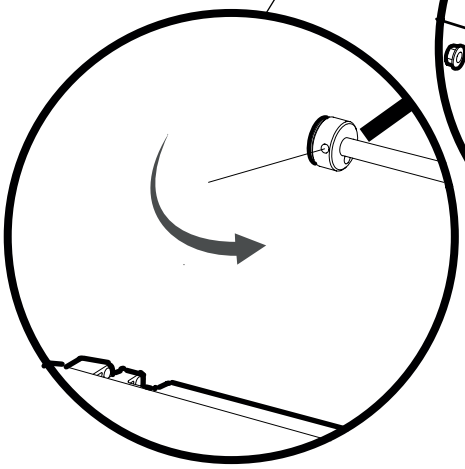

18

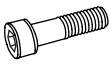

8 x – M8x65

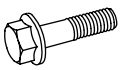

8 x – M8x90

16 x – M8

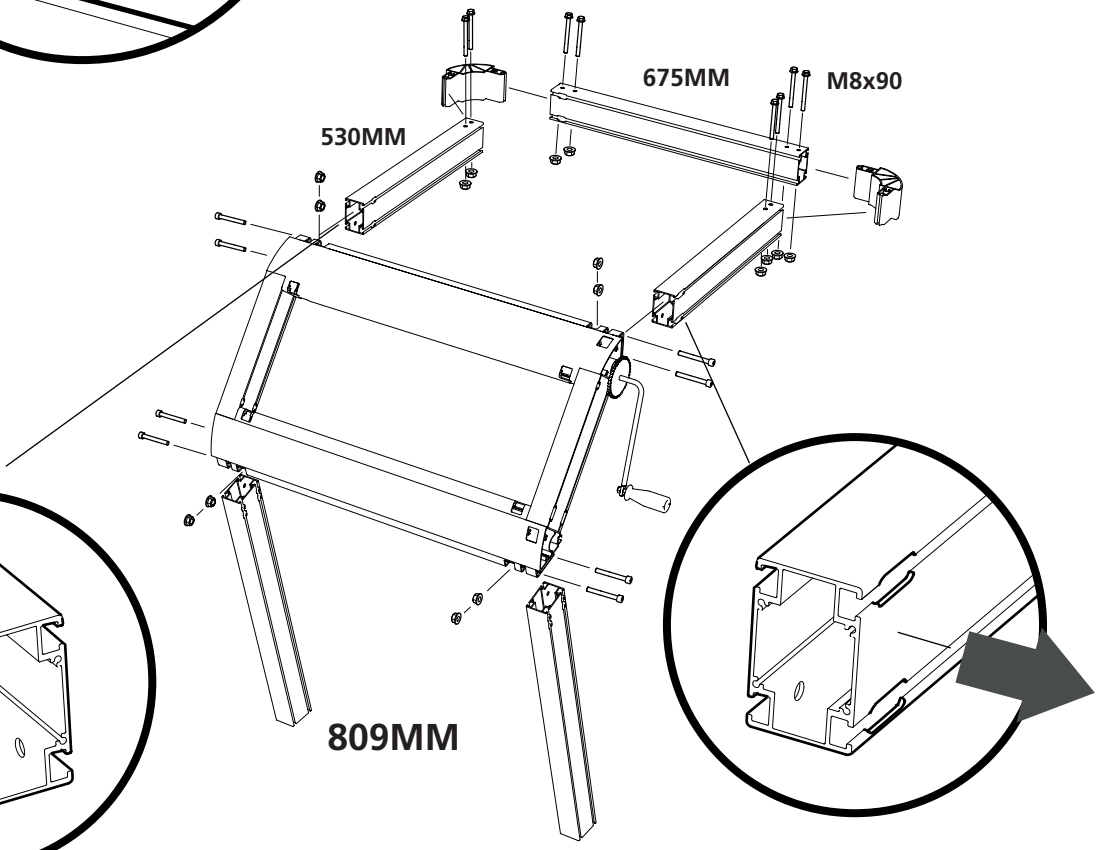

19

4x – M8x30

46x – M8x12

50x – M8

2 x – 12x16x8,5

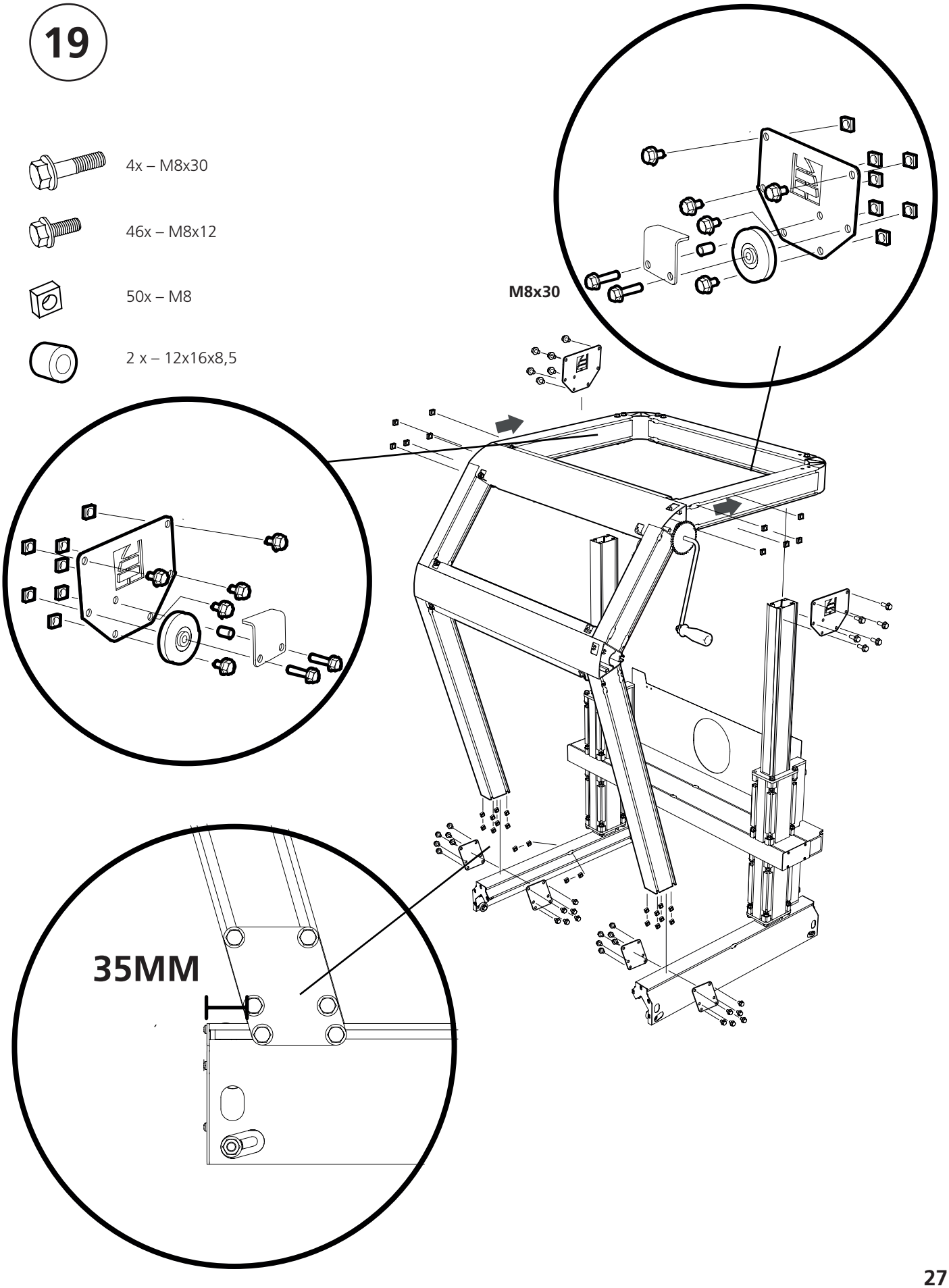

LOGOSOL

20

The saw head must not hang directly from the attachment; make sure there are two turns on the shaft when the saw head is in the bottom position.

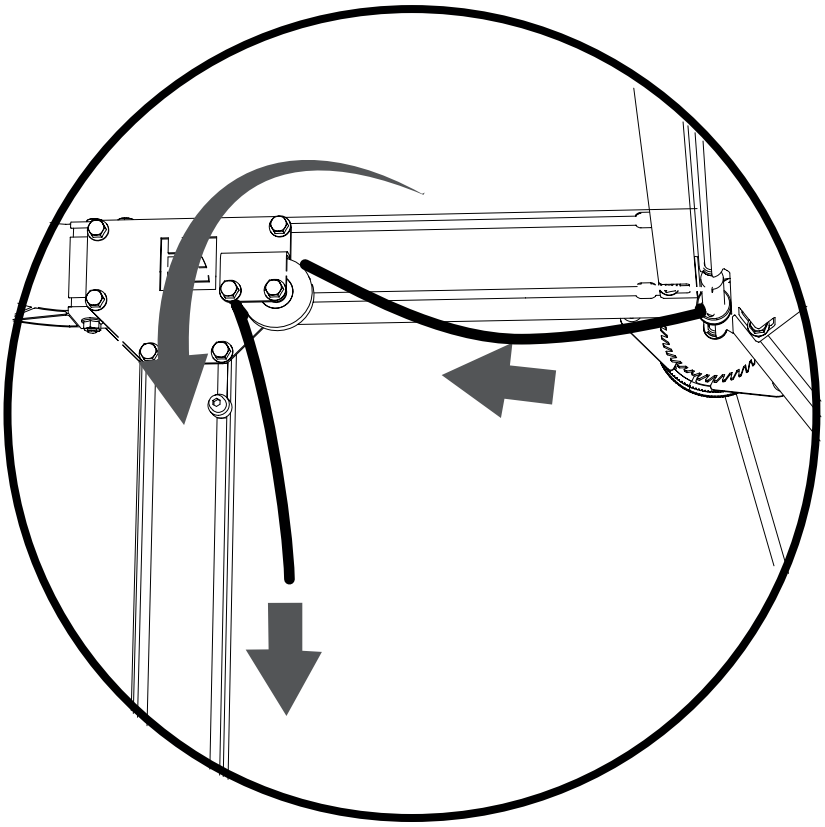

X2

21

Adjust the position of the cable knot so the cables raise the sawhead evenly.

00-00134-DIV

2 x – M8x80

2 x – M8

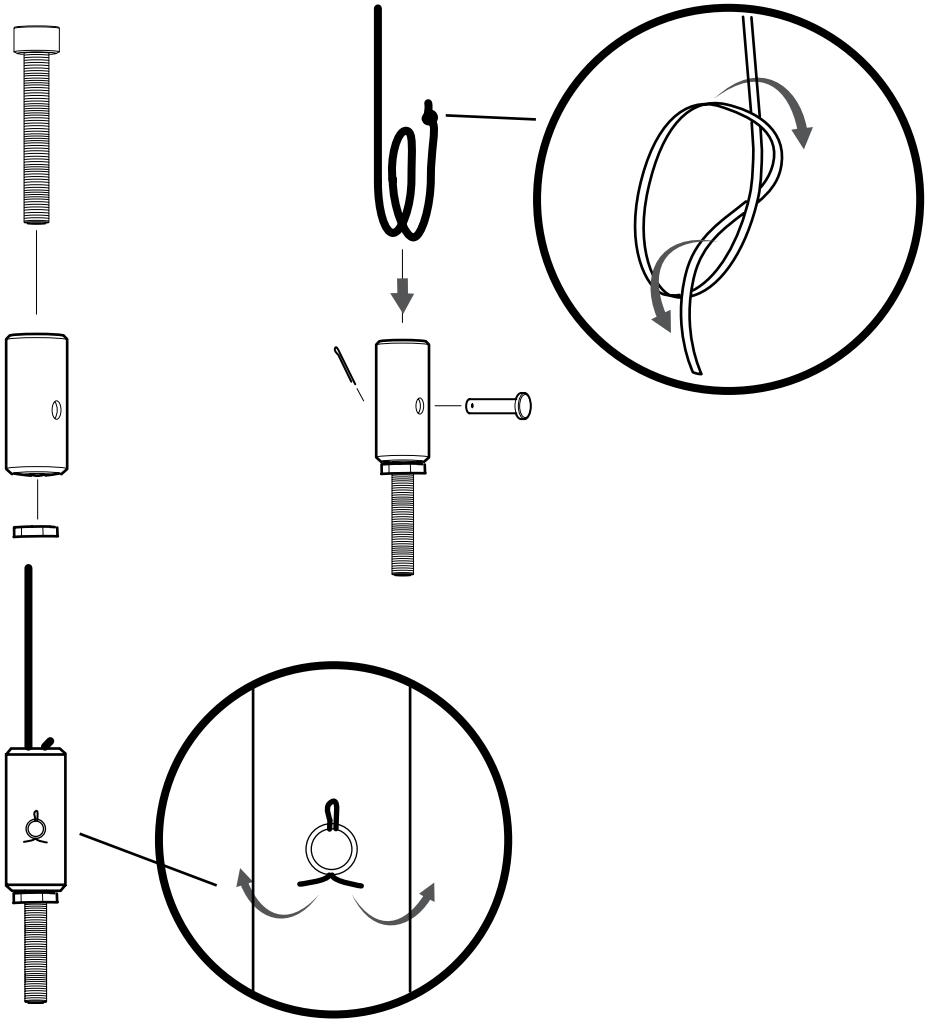

22

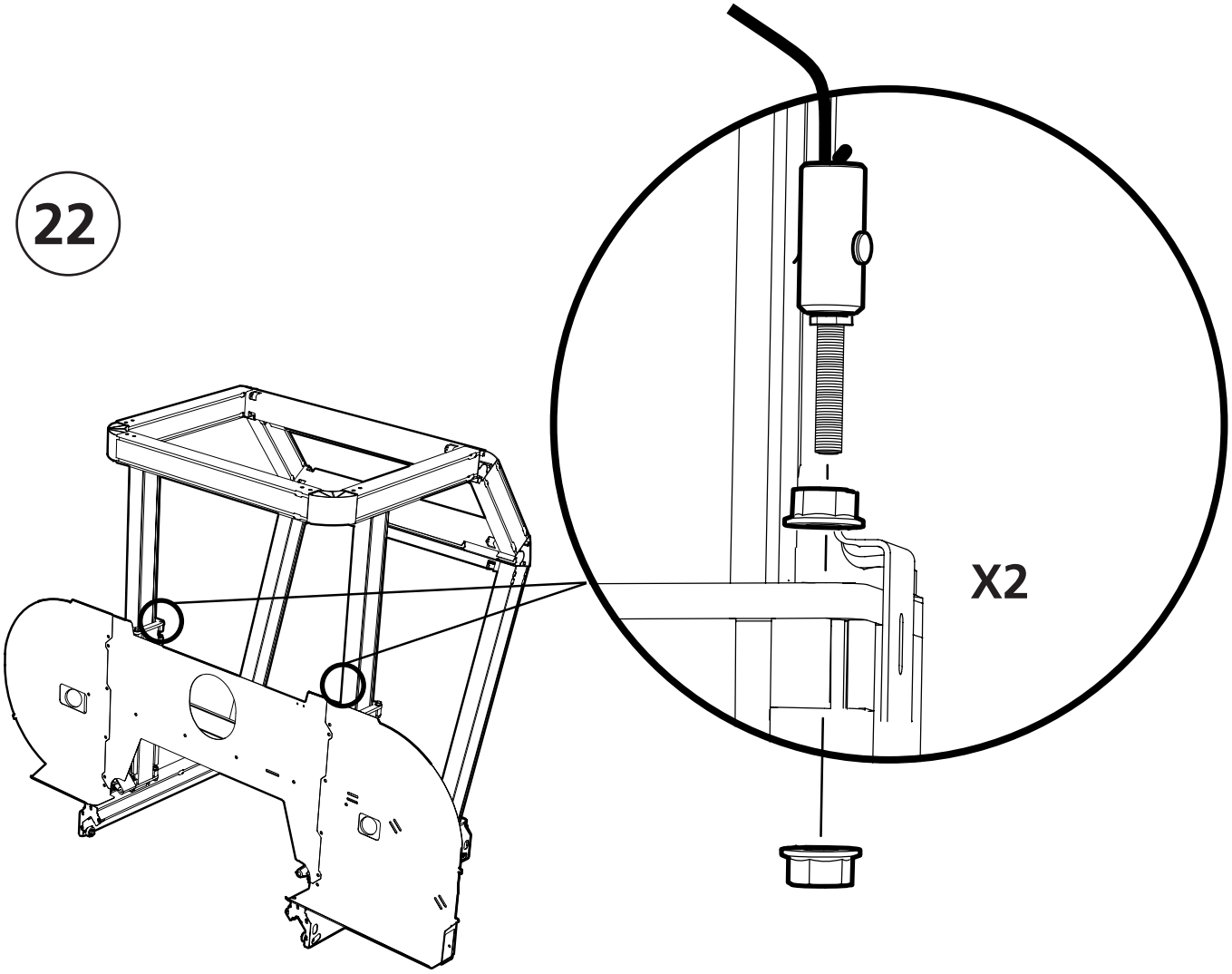

23

The wheel with the V-belt must be mounted to the shaft with the machined hole.

01-01152-DIV

2x

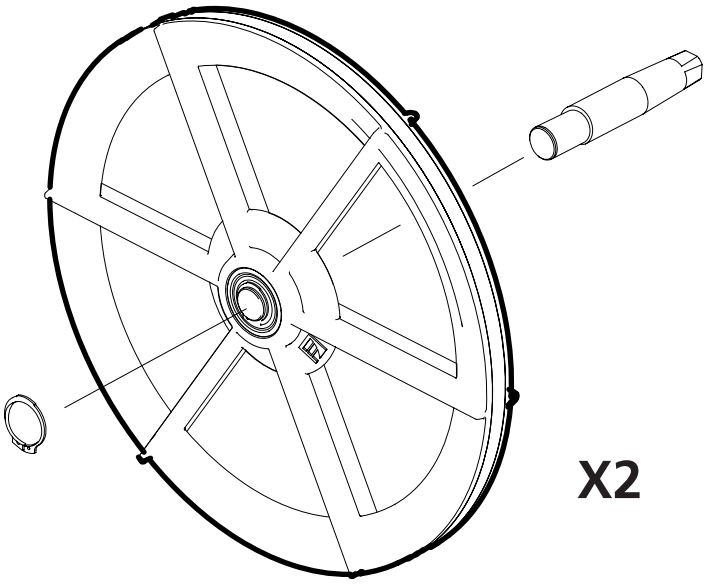

LOGOSOL

24

The wheel with the V-belt and the shaft with the hole should be mounted on the left-hand side (as seen in the illustration). Then lubricate the threaded rod and install.

2x – M10x20

2x – 30x10,5x2,5

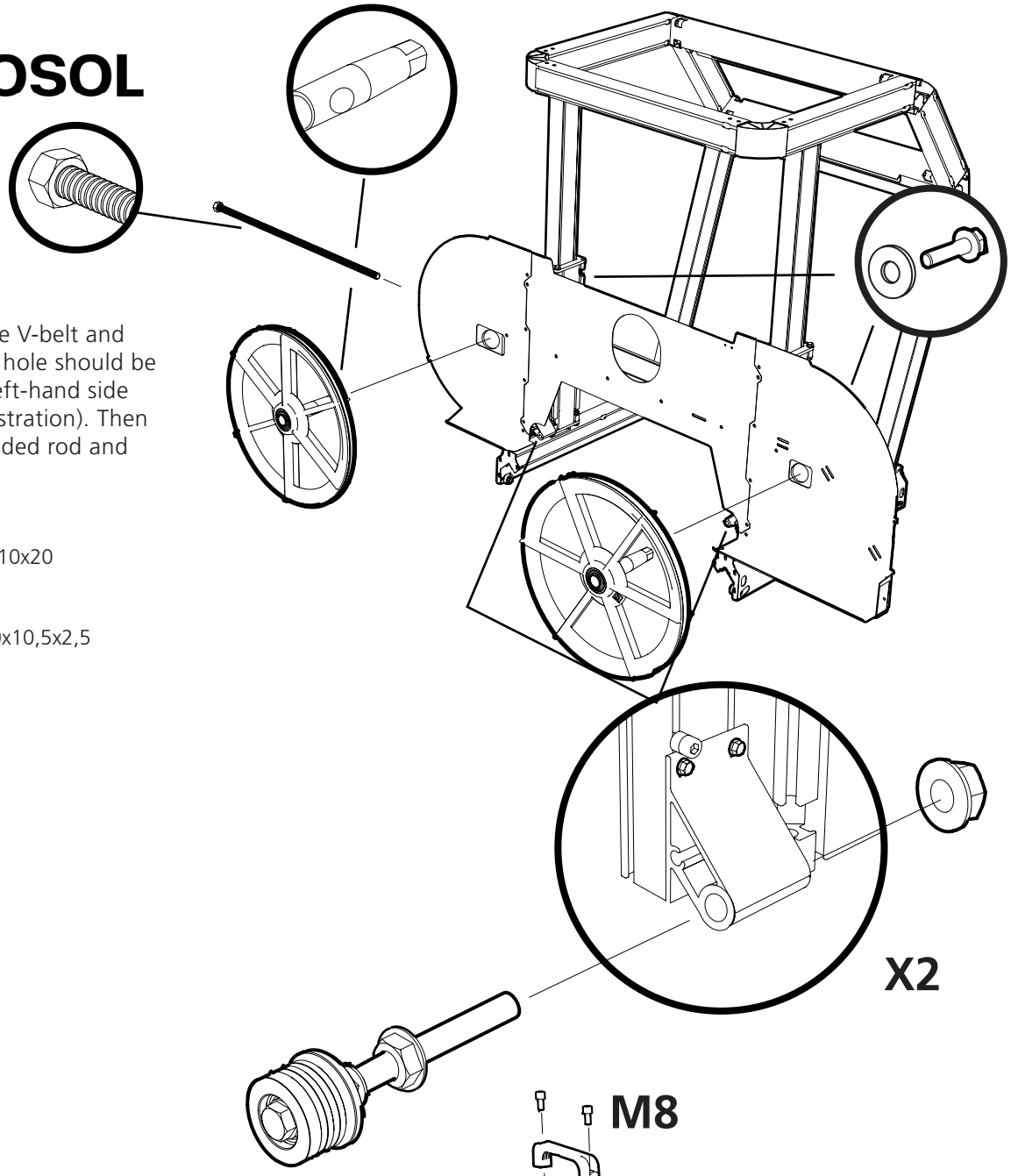

25

00-00134-DIV

2x – M8x16

7x – M6x12

2x – M8

7x – M6

1x – M6

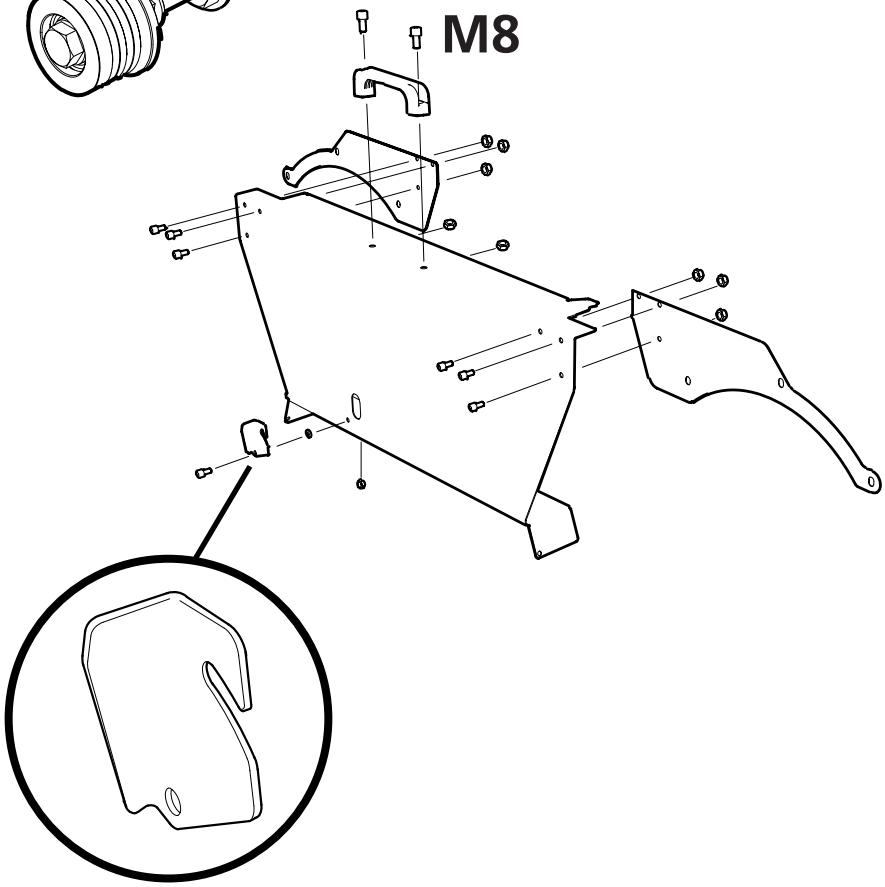

26

00-00134-DIV

6x – M6x25

6x – M6

6x – M6

6 x – 18x10x8,2

2x – M6x12

2x – M6

2x – M6

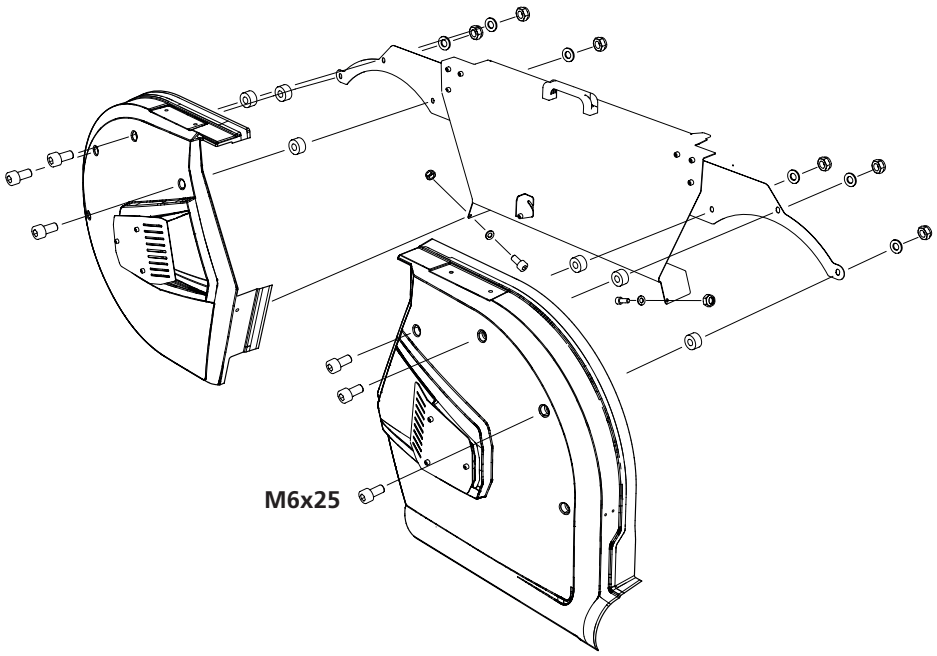

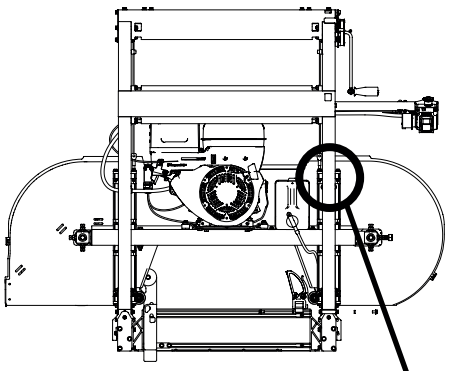

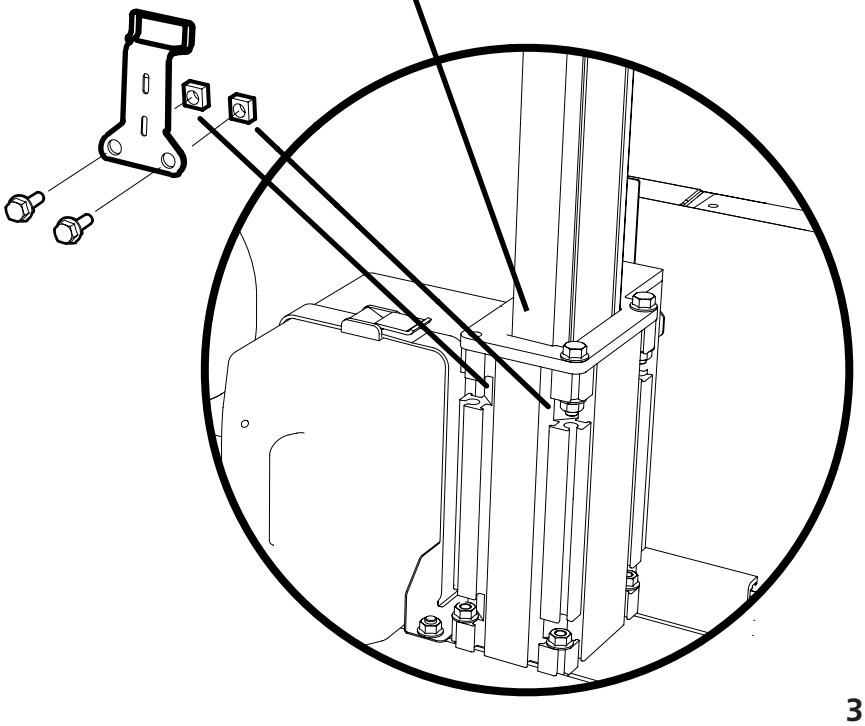

27

00-00134-DIV

2x – M8x12

2x – M8

LOGOSOL

28

00-00134-DIV

4x – M8x20

4x – M8

4 x – 18x10x8,2

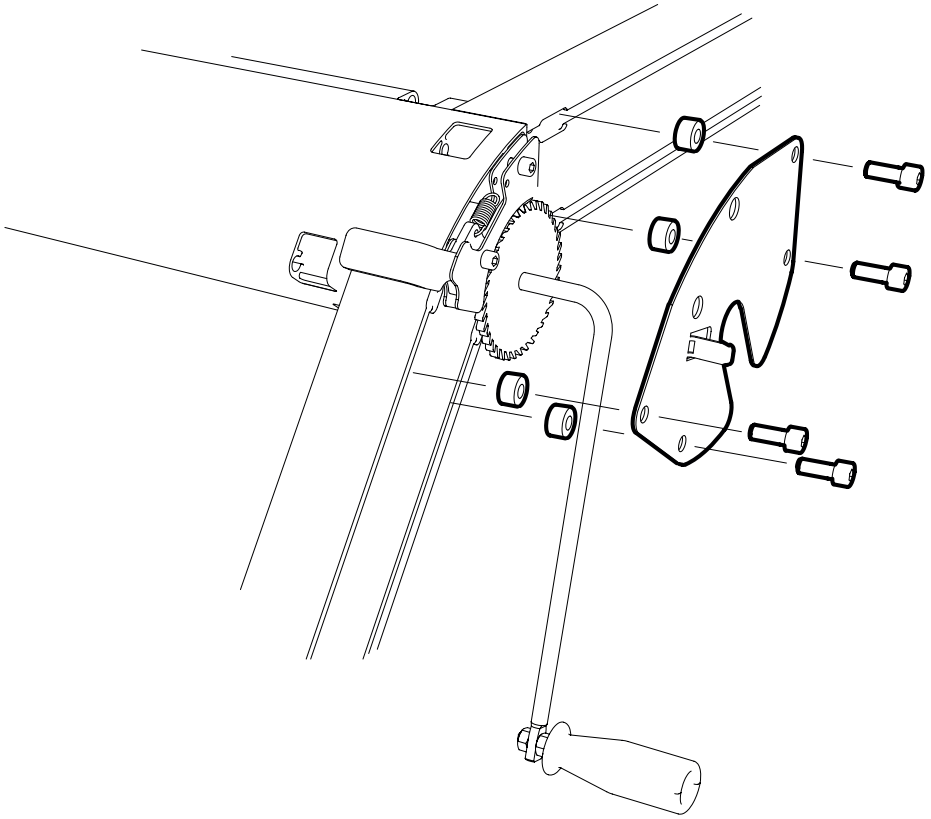

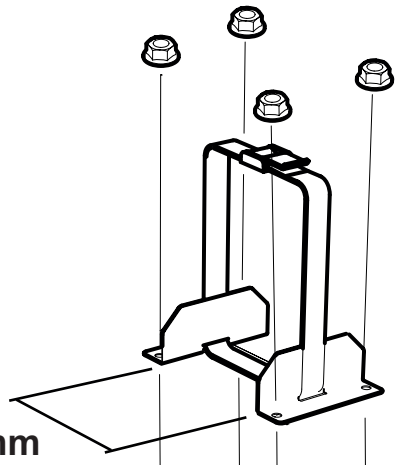

29

01-01152-DIV

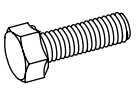

4x – M8x14

4x – M8

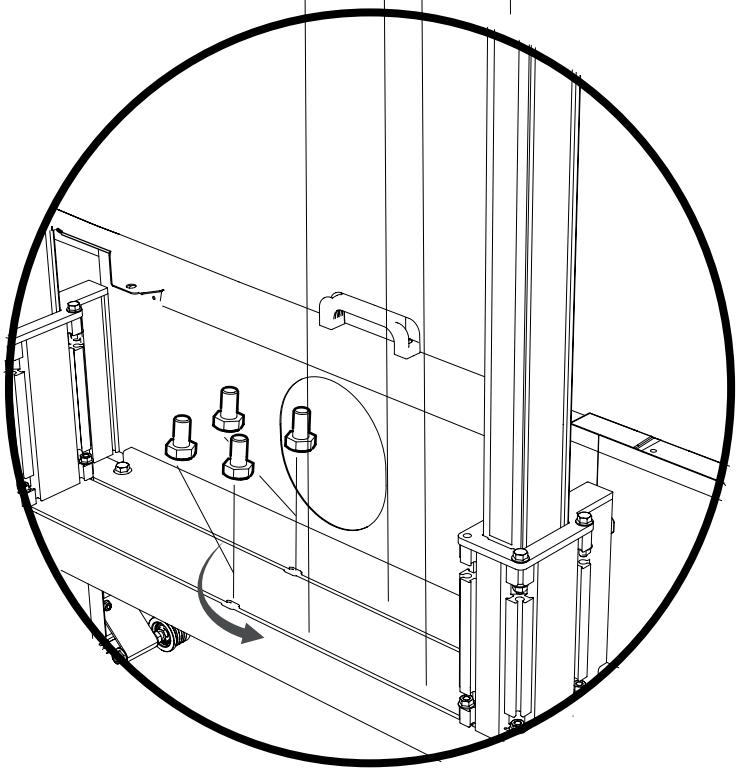

30

01-01152-DIV

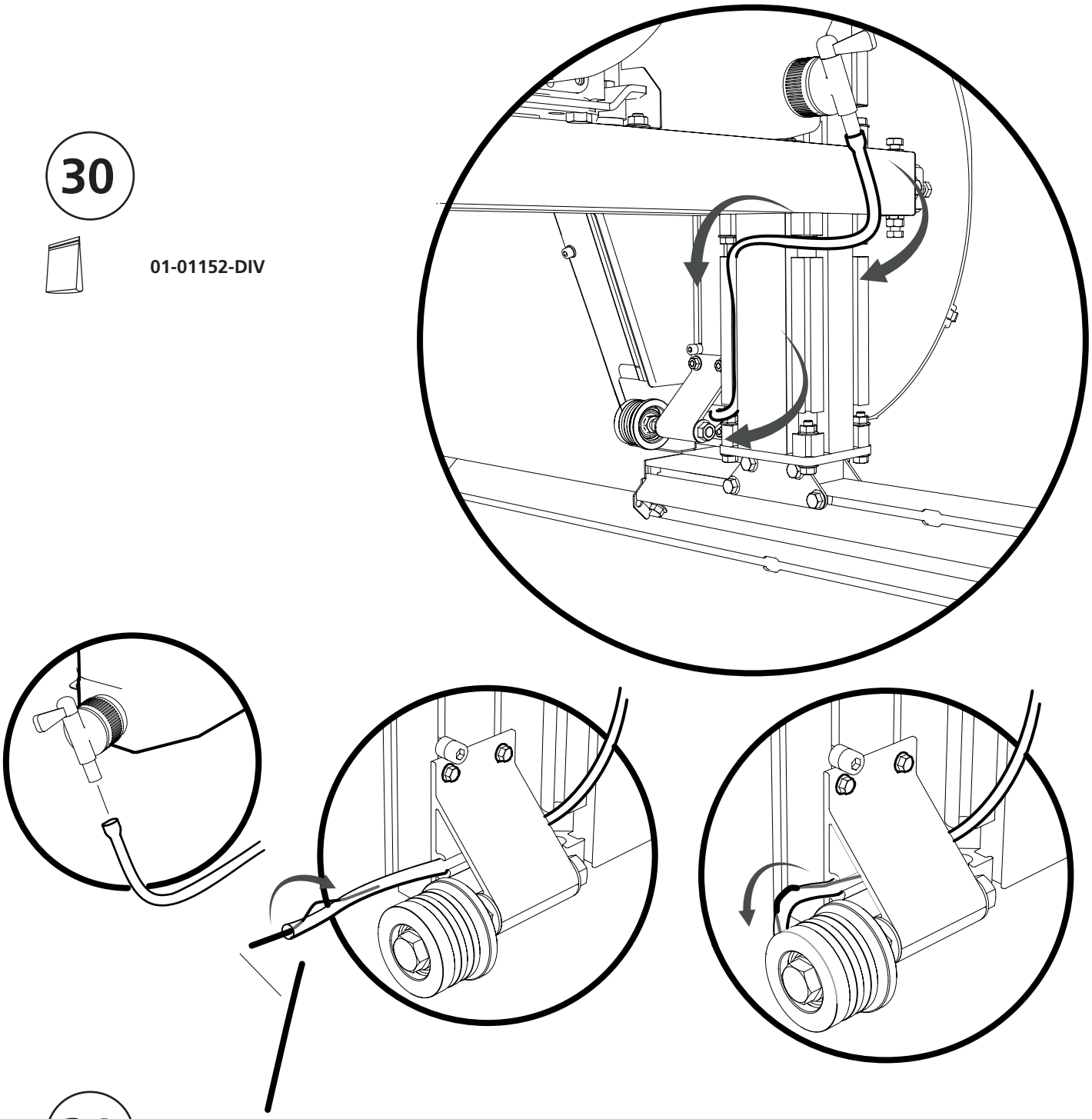

31

1x – 21x8,4

1x – M8

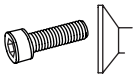

1x – M8x50

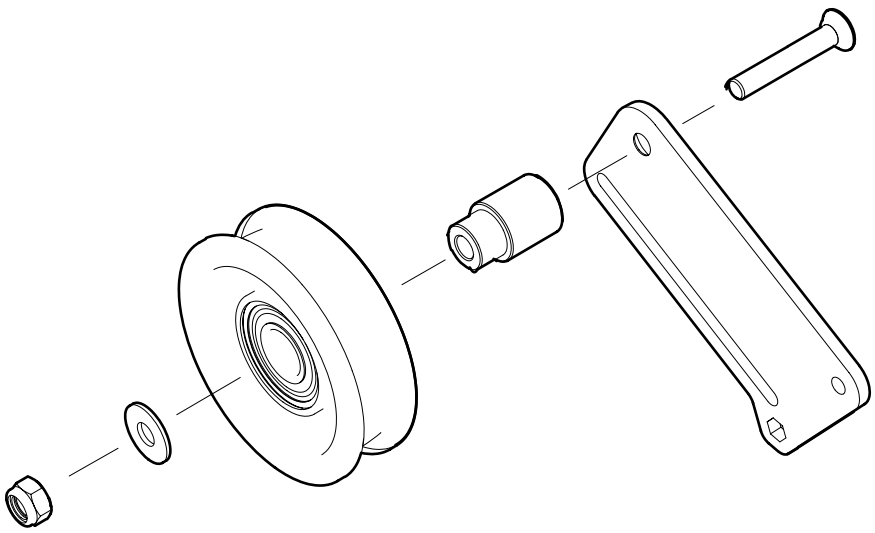

LOGOSOL

32

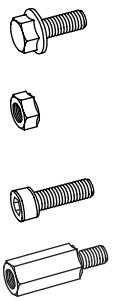

2x – M6x16

1x – M6

1x – M6x55

1 x – M6x40

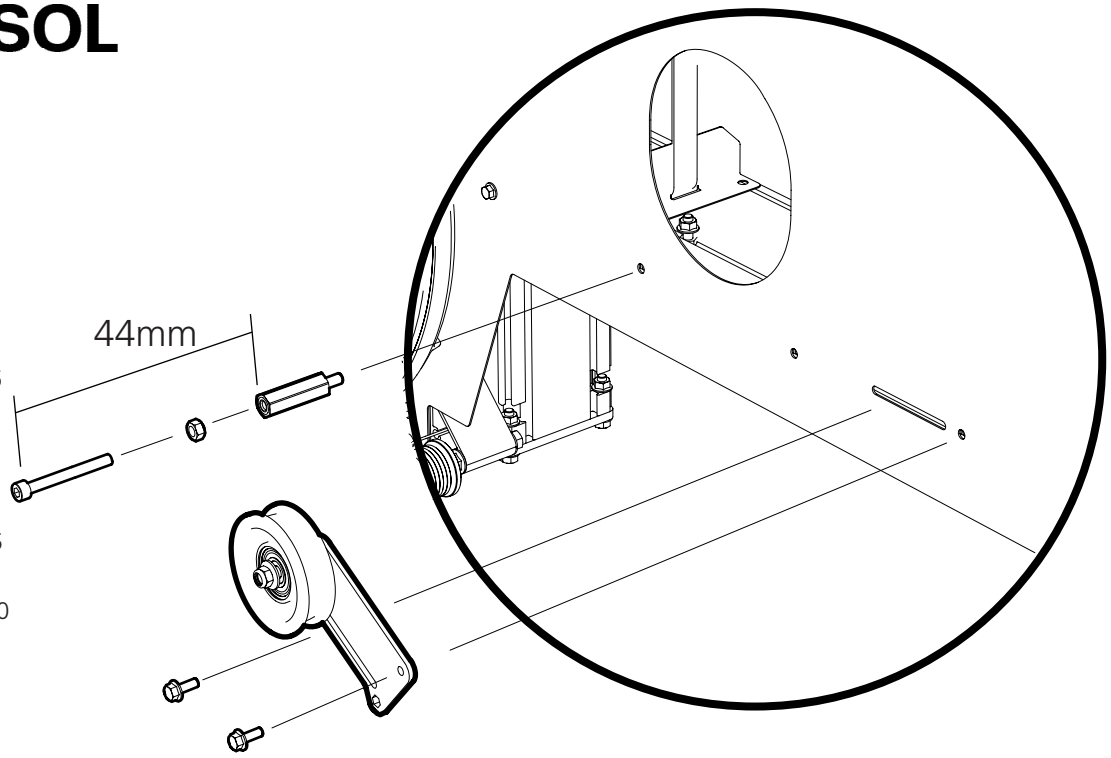

33

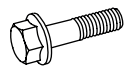

2x – M8x70

2x – M8

2x – 03-04086

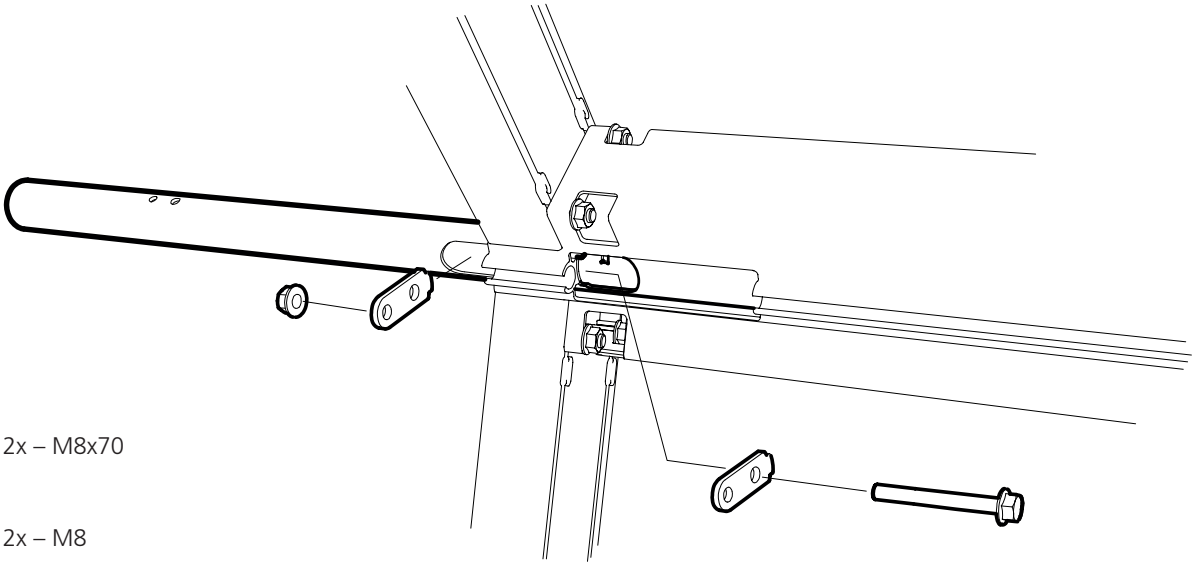

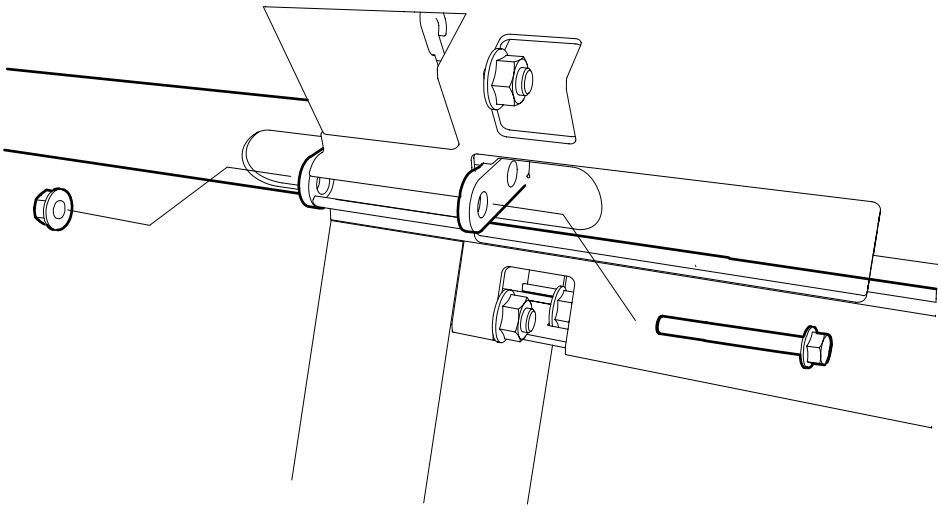

INSTALLATION OF THE MOTOR: SEE THE SEPARATE USER MANUAL

It is now time to fit the engine. The instructions for fitting the engine are supplied in a separate attachment: see the instructions for the engine you will be working with. When assembly is complete, carry on with the section entitled Adjustment sequence on the next page of this user manual to complete the adjustment sequence before starting the machine.

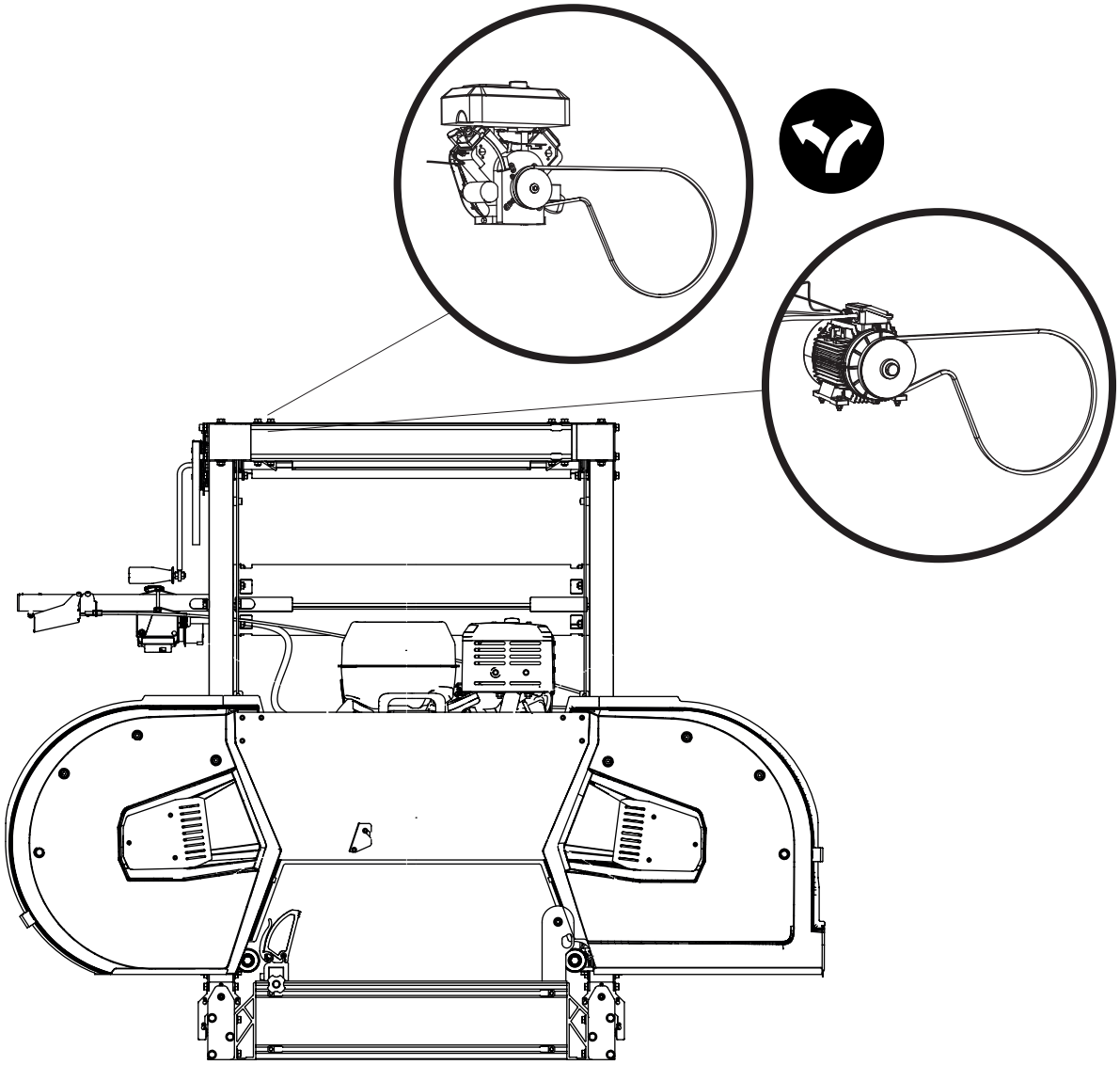

ORDER OF ADJUSTMENTS

Read all the adjustment instructions before beginning adjusting, and then follow the step-by-step instructions while adjusting.

IMPORTANT!

To ensure good operation of the sawmill, it is important that it is correctly adjusted. Some adjustments affect other machine settings. Due to this, it is crucial that you follow the order outlined below.

1. Adjust the levelness of the rail frame
2. Adjust the band wheels
3. The lengthwise position of the blade / Adjust the lengthwise position of the blade
4. Adjust the parallelity between the band blade and the cross bunks
5. Adjust the adjustable blade guide horizontally
6. Adjust the parallelity between the band blade and the rails
7. Tensioning the throttle wire

ORDER OF ADJUSTMENTS

1

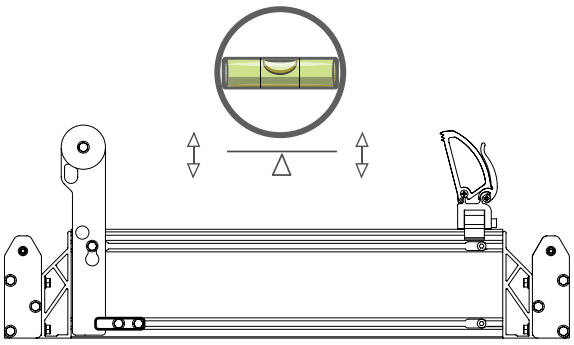

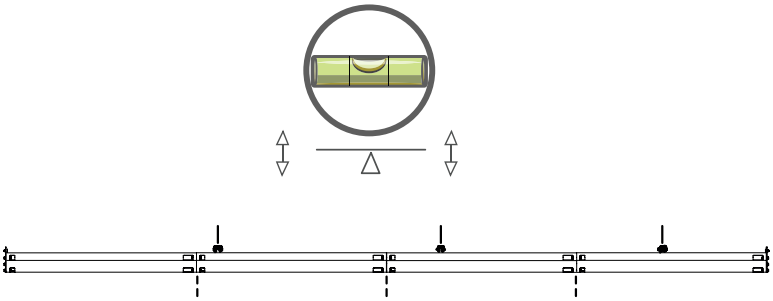

2

ADJUST THE BAND WHEELS

Adjust the angle of the wheels so that they are perpendicular to the cross bunks. With the sawhead in its lowest position, check that the wheels are square to the cross bunks. Do this adjustment without the blade guide rollers.
Place a straightedge on the saw blade as close to one wheel as possible. Position the straightedge over a tooth without set. Measure from the front edge of the straightedge (measurement point 1) vertically down to a cross bunk and note the value. Move the sawhead and repeat the measurement from the rear edge of the straightedge (measurement point 2). Compare the two values — they should match. If they don't, adjust the wheel angle using the adjustment screws until both values are the same. Once one wheel is set, repeat the process for the other wheel.

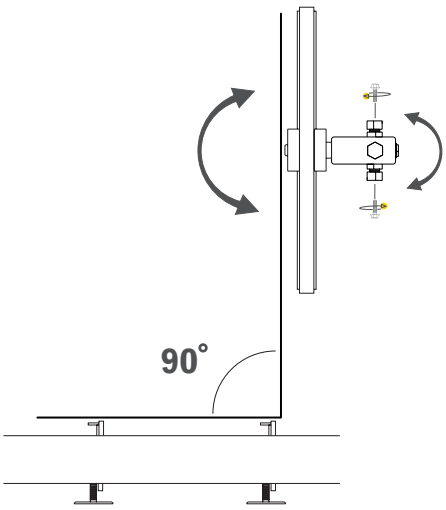

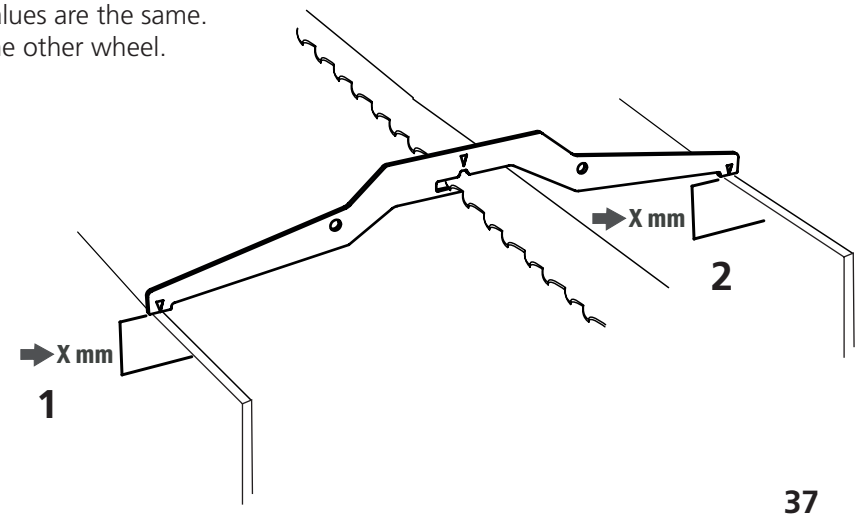

ORDER OF ADJUSTMENTS

3

ADJUST THE LENGTHWISE POSITION OF THE BLADE

The lengthwise position of the blade is adjusted by the adjusting bolts that is positioned horizontally, i.e. the bolts situated on the outside of the shaft mountings. Before adjusting, the lock nut has to be opened. If the blade moves outwards on the wheels, turn the adjusting bolt clockwise to compensate. If the blade moves inwards, turn the bolt counterclockwise. Adjust in small steps. Tighten all lock nuts and adjusting screws after the adjustment.

TIP! You may need to loosen the adjusting bolts slightly on the top side of the shaft mountings before adjusting the blade.

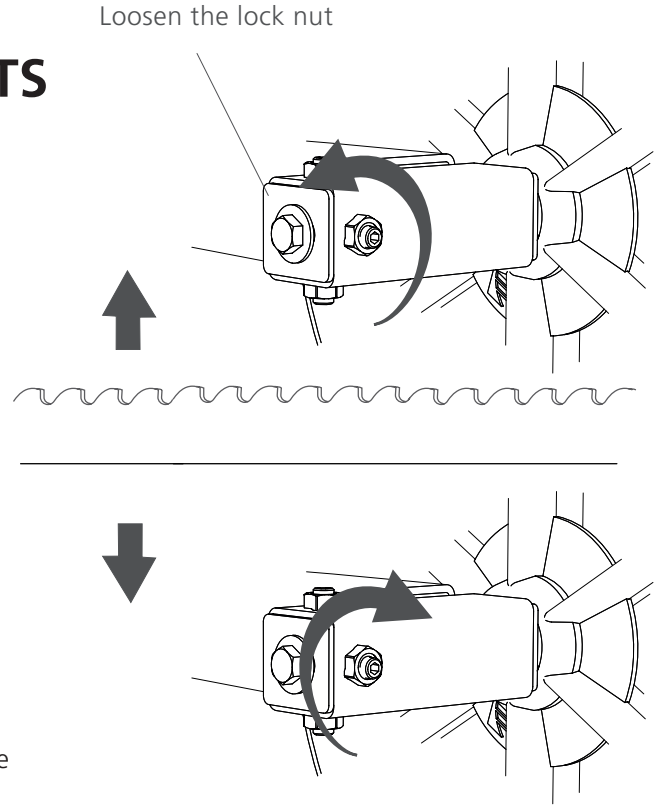

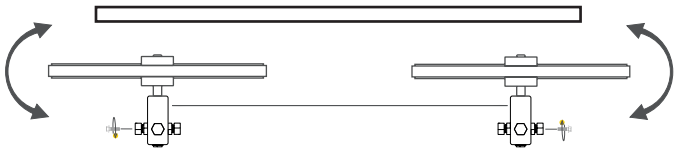

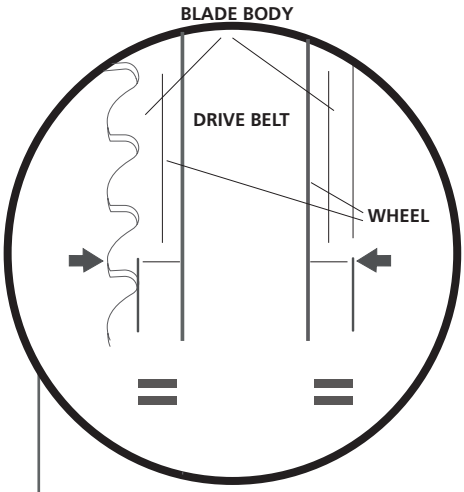

The lengthwise position of the blade is crucial to the sawing result. To ensure the best possible sawing result, we recommend that the blade body is positioned centred over the drive belt, which lies in the groove in the wheel.

First, install the blade centred over the drive belt so that blade body protrudes equally on both sides of the drvie belt. Then, tighten the blade. Rotate the wheels manually and check that the lengthwise position of the blade is unchanged. Rotate the wheels at least three turns. If the blade moves outwards or inwards on the wheels, you adjust this as described on the next page. If the blade runs straight on both band wheels, then check that the blade runs in a straigth line between the wheels. You check this by looking along the back edge of the blade viewed from the top of the wheels.

When the blade runs in a straight line, close the wheel guards and start the sawmill. Throttle up to make the wheels spin, then release the throttle. Open the wheel guards and check that the lengthwise position of the blade is unchanged. If this is the case, the blade is adjusted correctly.

In this case, **the blade body** refers to the part of the blade that is between the gullet and and the back of the blade.

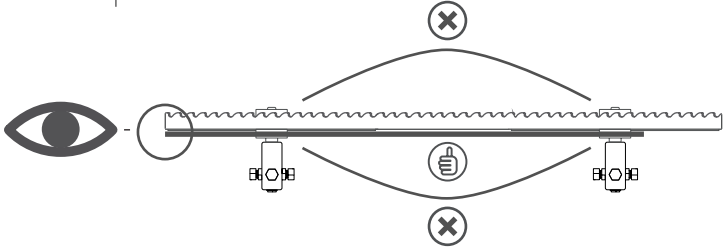

If the blade bends in the direction of the saw teeth, the blade is positioned too far forward on the wheels. If it bends in the other direction, the blade is positioned too far back.

ORDER OF ADJUSTMENTS

4

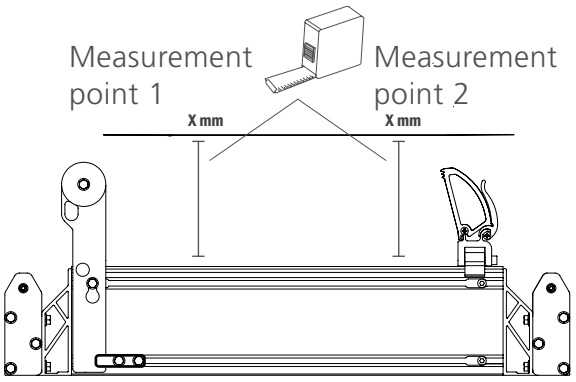

ADJUST THE PARALLELITY BETWEEN THE BAND BLADE AND THE CROSS BUNKS

To ensure a good sawing result, it is important that the band blade is parallel with the cross bunks. Measure the vertical distance between the blade and the cross bunk. Note down the measurements.

Adjust the band blade by turning the adjusting bolts on the sawhead until the measurements are the same at both measuring points.

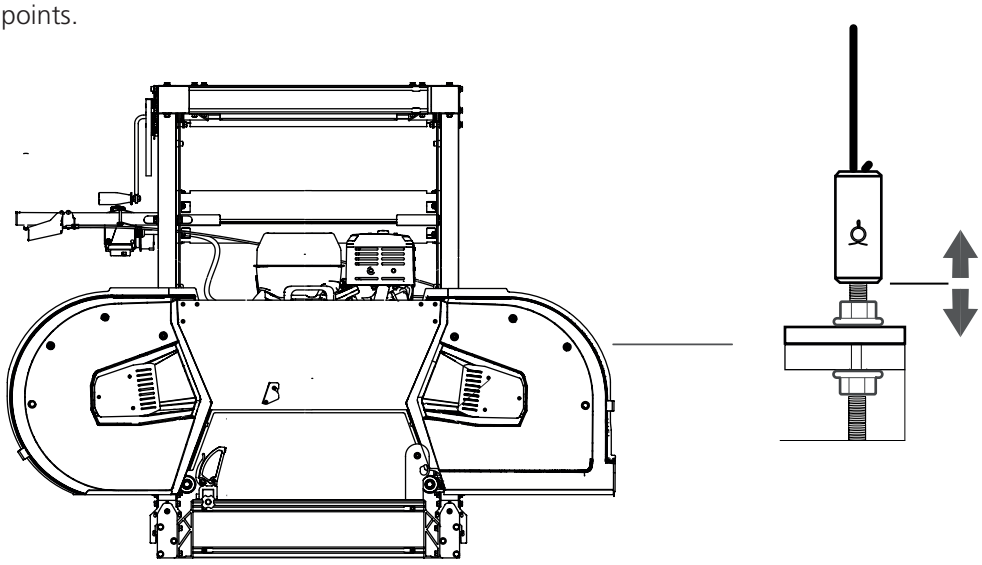

5

TENSIONING THE THROTTLE WIRE

The tension of the throttle wire can be adjusted by turning the adjusting bolt that holds the wire coating. Turn the adjusting bolt until you get full throttle on the engine when the throttle handle is fully pushed in. Then secure with the counter nut.

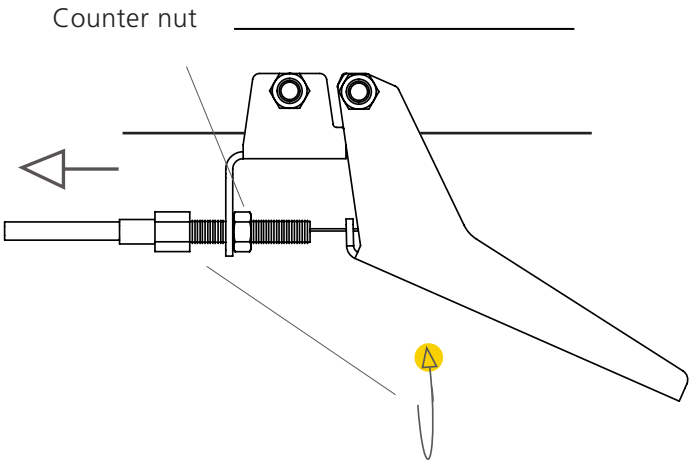

LOGOSOL

ORDER OF ADJUSTMENTS

6

ADJUST THE PARALLELITY BETWEEN THE BAND BLADE AND THE RAILS

To ensure good operation of the sawmill it is important that the blade is parallel to the rails. Place a straightedge on the blade as close as possible to one of the blade guide rollers. The straightedge should rest on a tooth that is not set. Now, measure from the lower front edge of the straightedge (measurement point 1) vertically down to a cross bunk. Note down the measurement. Move the sawhead forward and measure from the rear edge of the straightedge down to the cross bunk (measurement point B). Compare the measurements. They should be the same at measurement point 1 and measurement point 2.

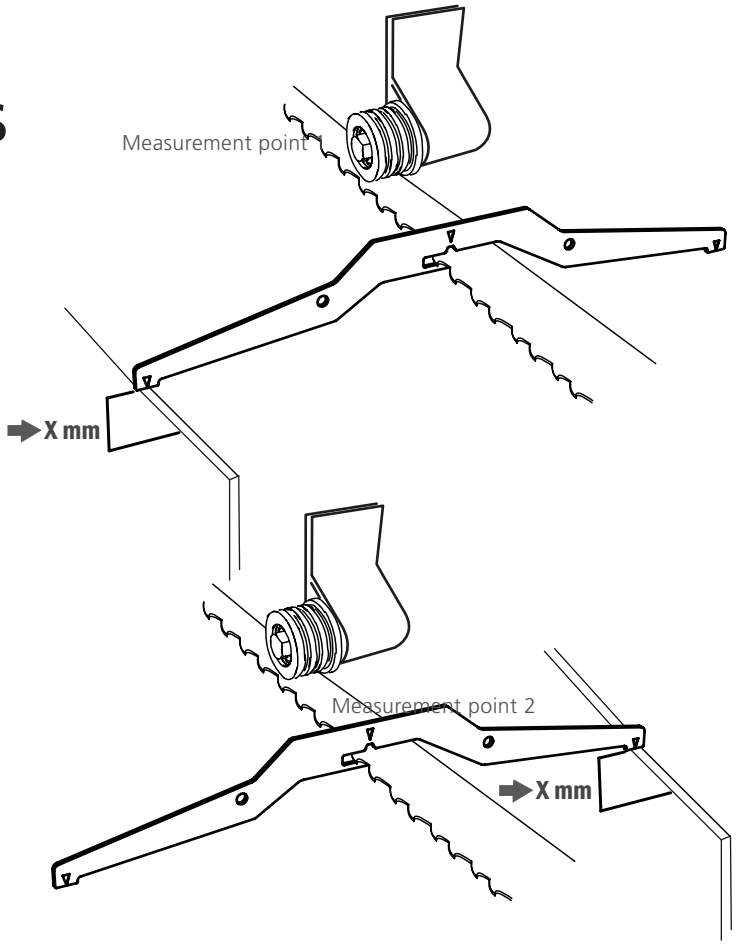

If the values deviate, rotate the blade guide roller holder until the measurements match at both measurement points. One method to facilitate adjustment is to start from the value at measurement point 1, compare it with the value at measurement point 2, and then adjust measurement point 2 up or down by half the difference. Once parallelism is achieved, repeat the adjustment on the other blade guide roller.

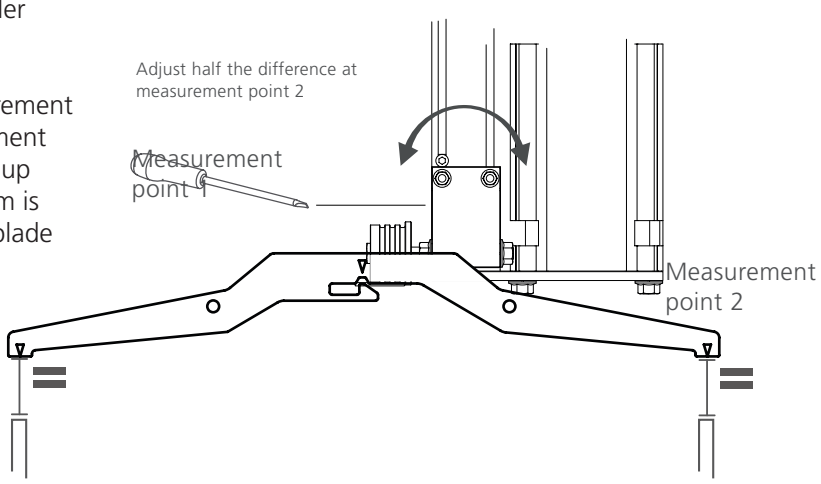

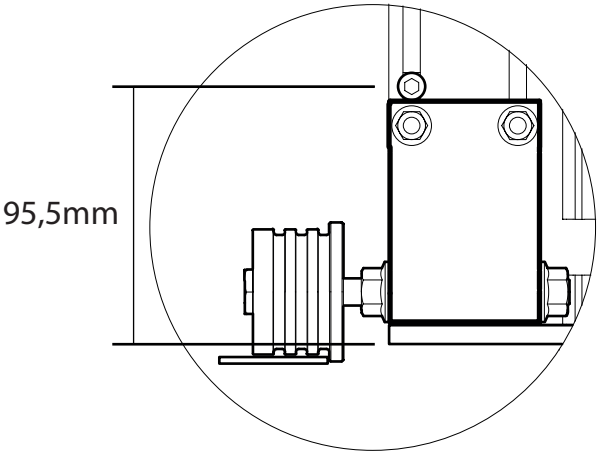

OTHER ADJUSTMENTS

Read all the adjustment instructions before beginning adjusting, and then follow the step-by-step instructions while adjusting.

The following instructions are crucial for a good operation of the sawmill, but the adjustments do not affect each other and do not have to be carried out in a particular order.

TRACK SWEEPERS

The saw carriage has track sweepers on its ends. It is important that you regularly check that they touch the rails.

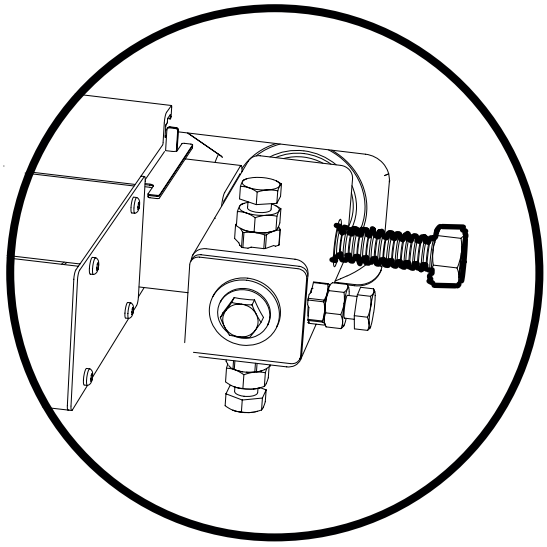

BLADE TENSION

Tension the blade by tightening the spring until it bottoms out and the locking handle becomes stiff. Then back off one full turn.
It is important to allow clearance for the spring to move, enabling it to absorb load variations from the blade. The spring must not bottom out during sawing.

ADJUSTING THE SCALE

Measure the distance between the log supports and the underside of a tooth that is angled downward. Then move the scale pointer so that the value matches the measurement. Next, raise the saw head so that the scale shows 470 mm, and then secure the upper end stops. (see image below)

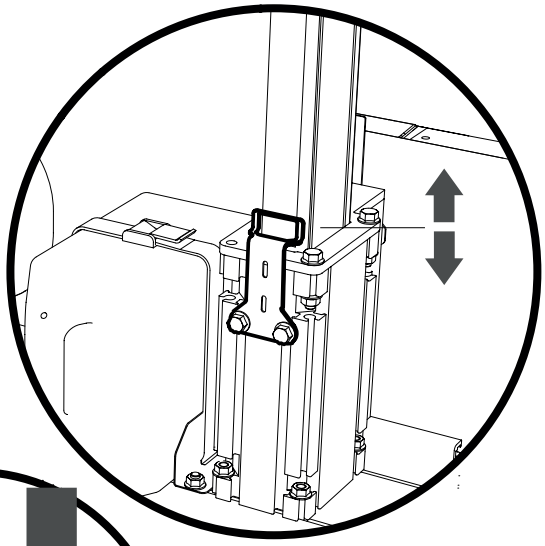

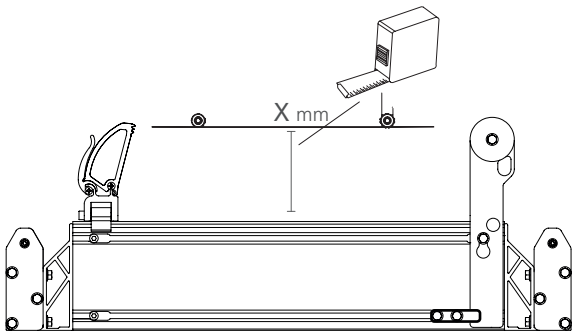

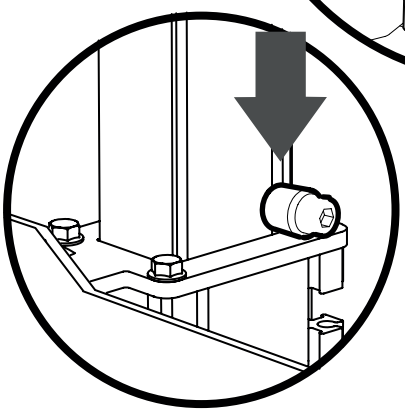

OTHER ADJUSTMENTS

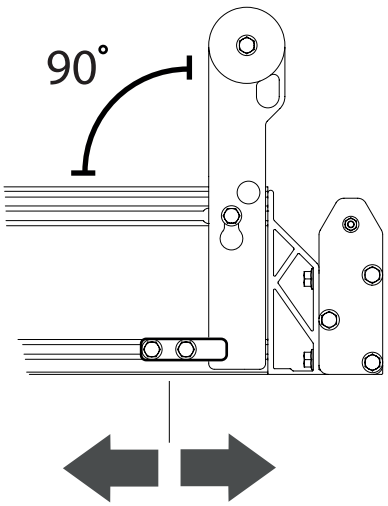

LOG SUPPORTS

To ensure good operation of the sawmill, it is important that the cross bunk and the log support are at right angles to each other. Adjust this by turning the adjusting handle located at the lower part of the log support. Check the angle with a set square.

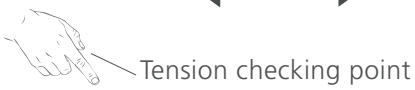

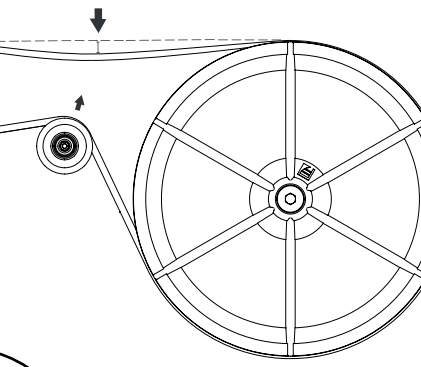

DRIVE BELT TENSION

To prevent the drive belt from slipping on the pulley, the drive belt has to be correctly tensioned. The belt tensioner pulley assembly can be rotated around its lower bolting. Tension the belt until you have reached the same values at the tension checking point as in the illustration to the right.

Belt tension

Deflection: 25 mm

Pressure: 3 kg

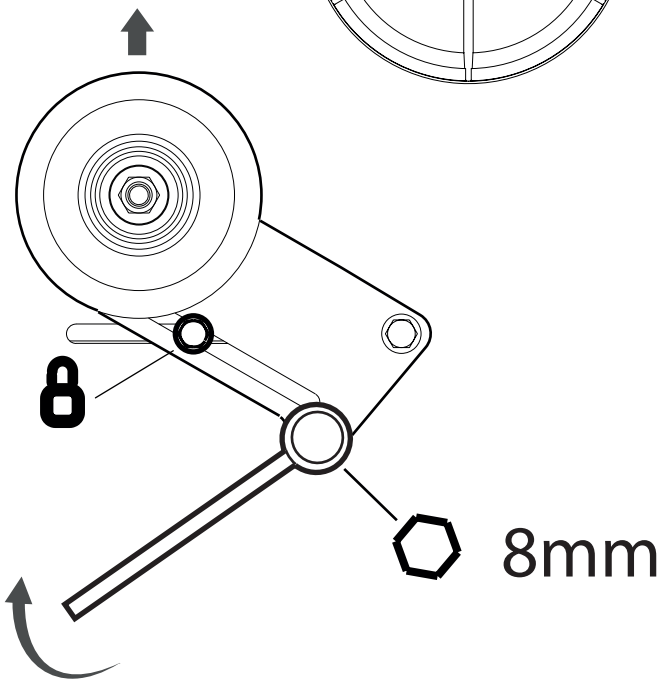

WATER TANK

The sawmill water tank has to be refilled before operation. Refill through the opening in the back of the saw carriage.

PREPARING THE ENGINE BEFORE STARTING UP

Before starting the engine for the first time, the engine has to be filled with oil and fuel. Lower the sawhead to its lowest position to facilitate the work. More detailed information on the engine can be read in the user manual of the engine, which is included in the shipment.

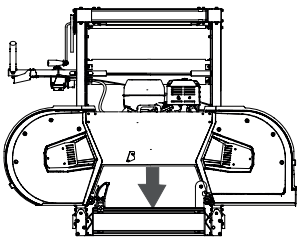

Tip:

Work with the sawhead lowered to its lowest position to facilitate access to the engine.

The guides allow adjustment of the blade's angle in the cutting direction by rotating the blade guide holder around the upper adjustment screw.
Be precise when making this adjustment. Refer to the setup sequence.

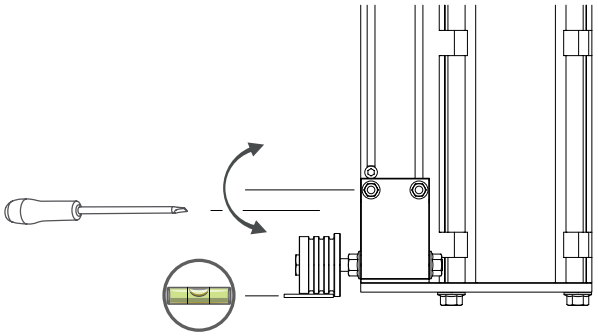

The blade guide can be adjusted inwards and outwards. The back of the blade should be approx. 3-5 mm from the rear edge of the blade guide roller.

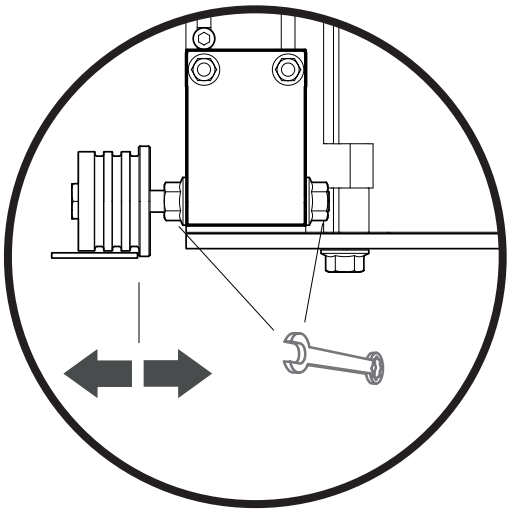

THE FUNCTIONS OF THE SAWMILL

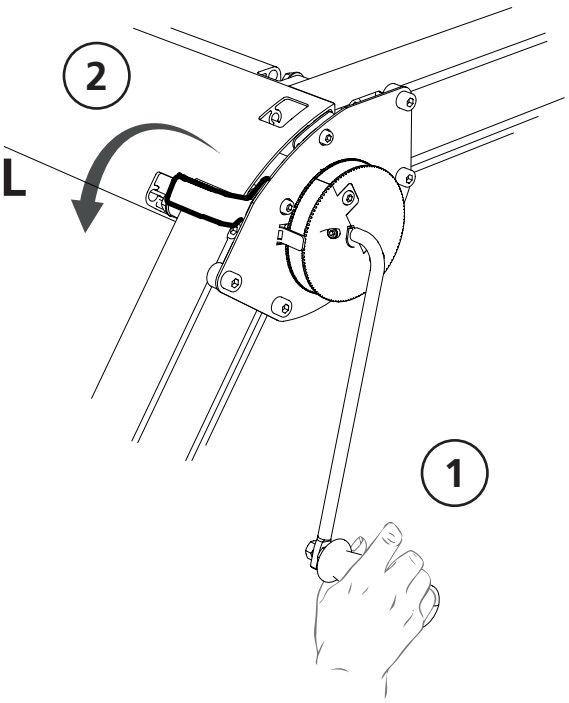

THE FUNCTION OF THE CRANK

⚠ **WARNING!** Risk of crushing injuries.

Always hold the crank handle before releasing the lock. The crank will spin rapidly if released uncontrollably. Always ensure the lock is engaged before letting go of the crank.

The crank's locking mechanism is divided into 40 positions per rotation.

The crank's locking mechanism is divided into 40 positions per rotation. Each position moves the sawhead 1 mm, and one full turn moves it 40 mm.

To avoid damage and injury, always keep one hand on the crank (1) before releasing the lock (2).

The crank scale (3) is used to help set the next cut and can be rotated around the crank shaft to reset to zero. This gives a clear view of the movement relative to the previous cut. The crank scale has a set screw to adjust friction against the crank shaft.

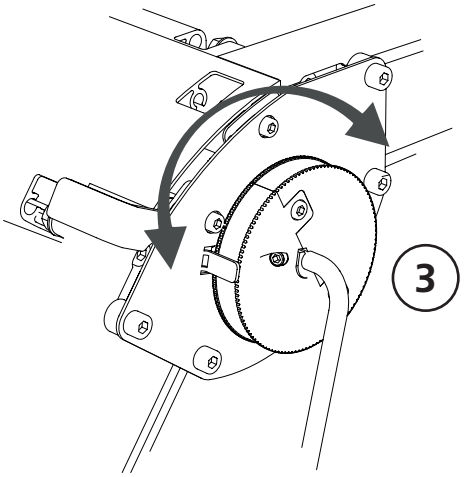

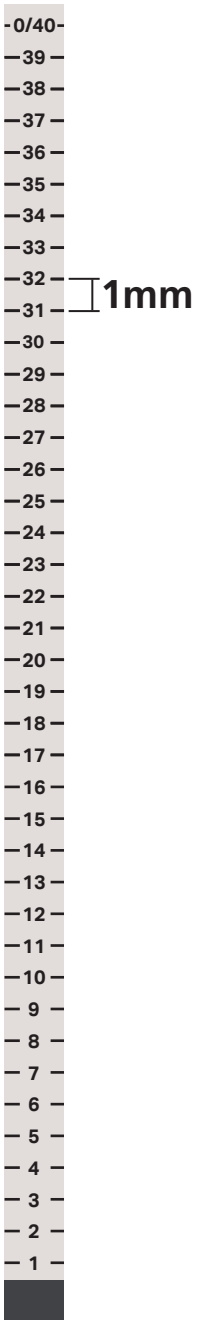

TIP: When cutting a board from the top of the log, always compensate for the blade thickness (i.e., 2 mm). The piece under the blade does not need compensation — it corresponds to the value shown on the absolute height scale.

How to use the crank scale as a cutting guide:
Example 1: To cut a 28 mm board, place the saw blade at the top of the cant. Set the crank scale to 0, lower the sawhead until it shows 28. Then lower two more steps to 30. Now you have a 28 mm board above the blade.

If the board remains on the cant, reset the scale to 0 before raising the sawhead and returning to the starting position. When you want to find the previous cut again, lower the head until the scale shows 0, then set the next cut.

THE FUNCTIONS OF THE SAWMILL

PARKING LOCK

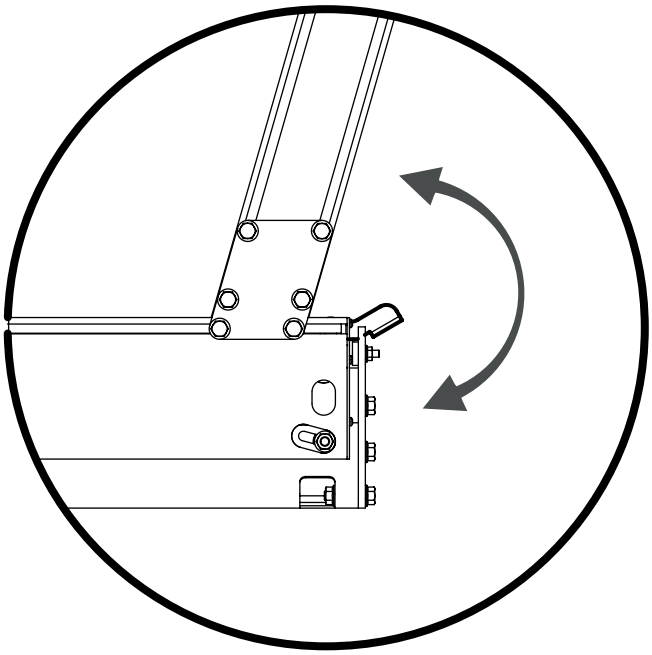

LOG CLAMPS

The sawmill comes with two log clamps that secure the log on the sawmill. The log clamp is an eccentric clamping device.

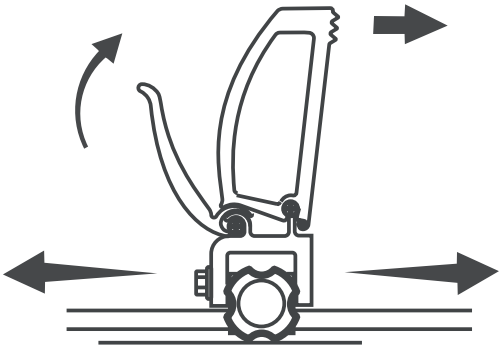

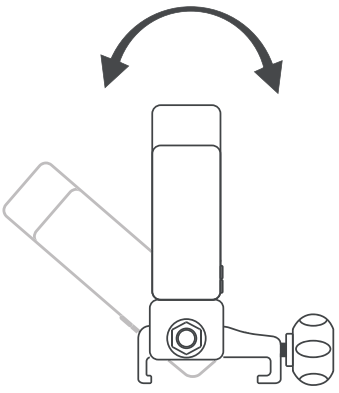

THE FUNCTIONS OF THE SAWMILL

WATER COOLING

The sawmill is equipped with water cooling. Start and stop the flow using the valve on the water container.

WIRING DIAGRAM

WIRING DIAGRAM, EMERGENCY STOP / SAFETY SWITCH

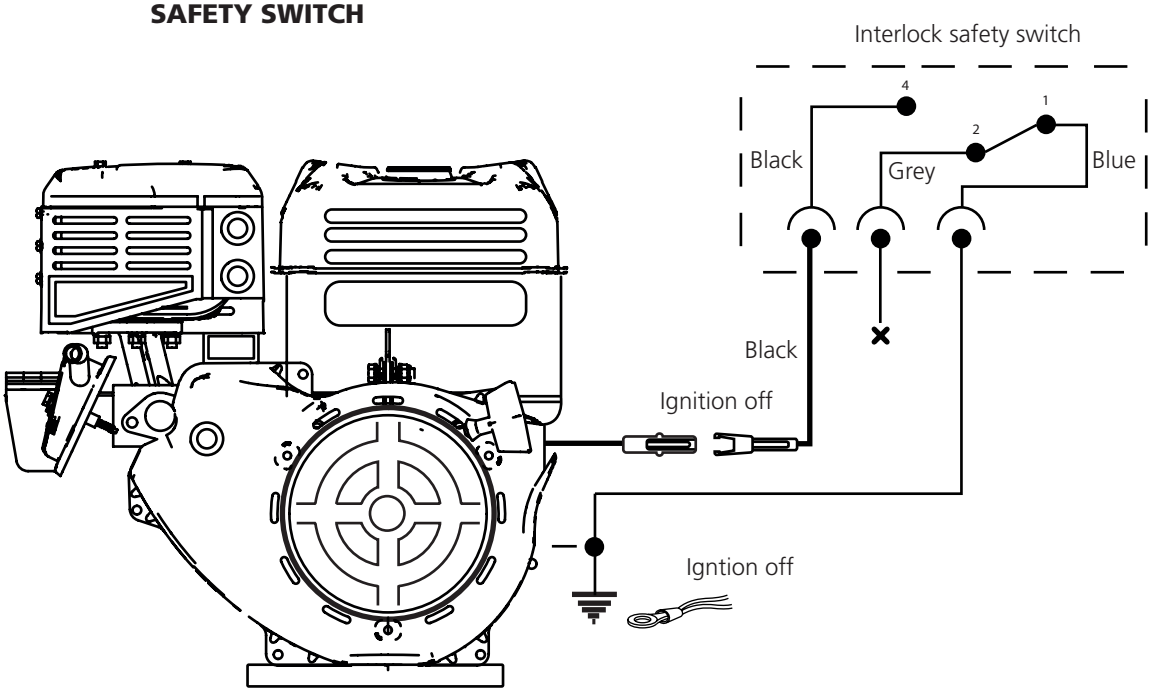

USING THE BAND SAWMILL

OPERATING THE BAND SAWMILL

WARNING! Cutting tools: Always stand behind the saw carriage and keep both your hands on the handles while operating the machine. Never stand in front of the carriage or band blade. Never pull the carriage through the cut.

WARNING! Risk of crush injury. Rotating parts: Even a slight force applied to the release mechanism of the sawhead can cause the sawhead to drop uncontrollably and make the crank rotate rapidly, which can cause serious injury.

WARNING! Never modify this machine in such a way that it no longer corresponds with the original design. Do not use it if it has been modified. Never use other attachments/ accessories than those recommended in this user manual.

WARNING! A broken band blade can be ejected out of the sawdust chute at high velocity.

During operation, make sure that nobody is on the side of the band sawmill where the sawdust chute is located. The risk of a blade breaking increases if it is not correctly installed or maintained.

The band blades and plastic parts of the sawmill are cold-resistant down to -25°C. Do not operate the band sawmill in colder temperatures than -25°C.

Ensure that the machine is correctly assembled and maintained in accordance with the instructions in this user manual.

Never work alone. Make sure that there are other adults within hearing distance, should you need to call for help.

WARNING! Danger of flying fragments from dirty logs.

Always inspect the logs so that there are no objects wedged in the bark before sawing.

Never stand between the pile of logs and the band sawmill. Always stand at the side of the pile of logs when handling the logs. Never stand where you are at risk of being hit by a rolling log.

Danger area of the machine:

Minimum safety distance around the sawmill is shown in *Illustration 1*. Note that the safety distance on the left side of the band sawmill is 15 m due to the the risk of blade pieces being ejected out of the sawdust chute if a blade breaks. On the other sides of the sawmill the safety distande is 5 m. [*Illustration 1*]

WARNING! Keep hands, limbs and other body parts well away from the band blade, cables and other moving parts.

WARNING! Risk of being crushed by the saw carriage.

Always use the parking lock when working with the saw carriage.

WARNING! Risk of tripping over the rails and cross bunks.

Never take a short cut across the rails. Hang electric cables up and out of the way so that they do not get damaged or become a tripping hazard.

WARNING! Never operate the petrol powered engine in enclosed areas. Ensure that there is good ventilation. The exhaust gases contain harmful substances that can pose a danger to life and health.

WARNING! Risk of being crushed between the sawmill and a moving log.

The log stack must always be secured with reliable straps around the logs (see the chapter *Operation Instructions*).

Never walk on the rails or the cross bunks.

USING THE BAND SAWMILL

Hard knots in the wood can cause a deviation in the result of the sawing.

Every time before operating the band sawmill:

Ensure that

- the operator is wearing the prescribed personal protective equipment
- the prescribed maintenance procedures have been properly carried out
- the band blade is not moving when the engine is idling
- the machine stands firmly and securely and the rails are supported along their full length
- the anti-tip wheels of the carriage and the rail end stops are properly installed
- everything on the band sawmill is properly and securely installed and in good working order
- all safety features on the band sawmill are properly and securely installed and in good working order
- the band blade is correctly installed, and that it rotates freely and in the right direction.

Before each cut:

Ensure that

- no other persons than the operator and no pets are within the danger area of the machine.
- the worksite is free of objects that can pose a tripping hazard or distract the operator.
- the band blade runs clear of the log supports and log clamps.
- the rails are free of debris, dirt, etc.
- the log is firmly secured.
- the adjustable blade guard has been correctly adjusted to manage the maximum width of the log.

When operating the band sawmill:

WARNING! Risk of burn injuries. The engine and its muffler get very hot during operation and remain hot a while after operation. This also applies to an idling engine.

WARNING! Risk of fire! Petrol and petrol vapours are extremely flammable. Be aware of the fire, explosion and inhalation risks involved.

The engine must be turned off and have been allowed to cool for 10 minutes before refueling.

Always turn the engine off when you are leaving the operating station, even just temporarily, e.g. to take care of sawn timber or do maintenance.

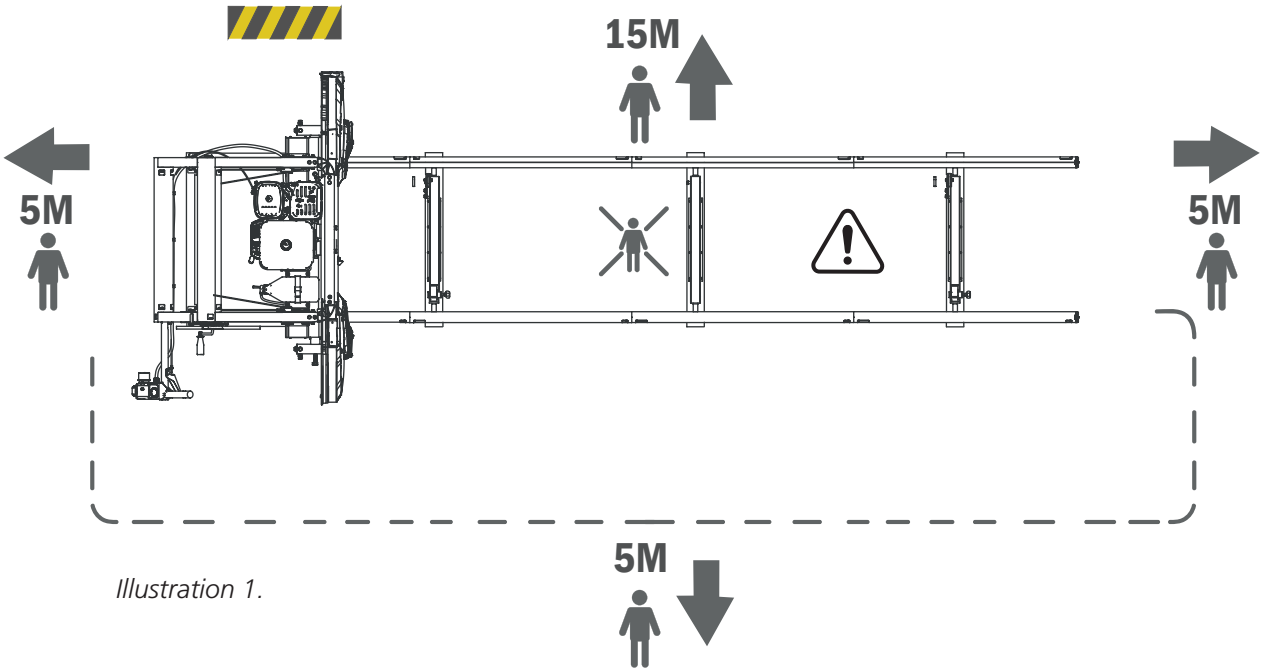

Illustration 1.

USING THE BAND SAWMILL

STORING

If the band sawmill is not in use, even when it is for short periods of time, the band blade must be removed from the machine and be stored where it is inaccessible to children and other persons.

For longer periods of storage:
- empty the fuel tank and the water tank,
- remove the band blade from the machine,
- close the fuel valve,
- secure the saw carriage to the bed.

Store the band sawmill where it is inaccessible to children and other persons, preferably in a locked location.

After very work session, release the tension on the blade to reduce wear.

MAINTENANCE

WARNING! Risk of serious injury.

Before performing any service and maintenance on the machine: turn the ignition key to the OFF position and close the fuel valve.

WARNING! Risk of burn injury. The engine and its muffler get very hot during operation and remain hot after the engine has stopped.

Allow the engine and the muffler to cool before you perform any service or maintenance on the machine.

MOVING THE BAND SAWMILL

WARNING! Risk of crush injuries.

Keep people and pets outside the 5 m danger area around the machine while lifting and moving the machine parts. Secure the load during transport.

The saw carriage and the rails/bed must not be lifted or transported when assembled together, but must be transported separately as two parts.

Lifting the saw carriage: Disconnect the carriage's anti-tip wheels, one on each side, and lift the carriage with the help of reliable lifting gear affixed to the lift rings located at the top of the carriage. Weight: see *Technical data*.

Lifting the rails/bed: Use a hand pallet truck or a forklift truck and lift under the rails. Place a protective layer of wood on the forks before lifting. Ensure that the rails are well balanced and secure the load to the lift forks before transport. Weight: see *Technical data*.

REFUELING

WARNING! Risk of burn injury. Petrol is an extremely flammable fluid.

Before refueling the engine of the machine, wait until the engine has cooled. Turn the ignition key to the OFF position and close the fuel valve.

Refueling: Lower the sawhead to its lowest position and have the saw carriage in its locked position at one of the rail ends before refueling. Use a funnel and try to avoid spilling.

SAWDUST MANAGEMENT

If the sawmill is used outdoors it can be operated without a chip extractor.

Make sure that you regularly remove sawdust that has accumulated around the machine, using a shovel e.g. If a chip extractor is connected, you need a capacity of at least 800m^3/h.

Exhaust hose: In case an exhaust hose is connected to the sawmill, it must have a spiral that can be grounded.

START & STOP INSTRUCTIONS: PETROL ENGINE

START

1. Open the fuel valve by moving the fuel control lever to the right until it reaches the position "ON".

2. To start a cold engine, move the choke control lever to closed position (the control lever in its left position). To start a hot engine, leave the choke control lever in its open position (the control lever in its right position).

3. Turn the ignition key to the "ON" position.

4. Gently pull the start handle until you feel some resistace and then pull firmly. Gently return the starter handle.

5. Give gas by squeezing the throttle handle all the way in to its end position. This brings the engine up to its operating speed and the band blade starts rotating.

6. If the choke is in its closed position, gradually move the control lever towards its open position as the enging gets hotter.

STOP

You stop the band blade by releasing the throttle on the push handle. The band blade will then slow down and stop, and the engine goes down to idle. Then, turn off the engine by turning the ignition key to the "OFF" position and close the fuel valve.

OPERATION INSTRUCTIONS

LOG STACK

Do not stack the logs higher than 1 m.

Logs that are soiled, sandy, muddy or dirty considerably shorten the life of the band blade and increase the risk of blade breakage. Avoid dragging the logs over the ground and try to keep the logs as clean as possible.

It can also be a good idea to separate different sorts of wood into different log stacks.

LOG TABLE

It is possible to load logs from both sides of the band sawmill. If the log stack is placed on the same side as the operator's side, the log stack must be secured before every occasion of sawing.

Build the log table so it is the same height as the cross bunks on the band sawmill. If the log table is placed on the left side of the band sawmill, it should end 10 cm from the band sawmill. If the log table is placed on the operator's side, it should end approx. 1 m from the band sawmill and you should use a removable ramp between the log table and the sawmill. Ensure that the rear of the log table has large wedges to prevent the logs from rolling off from it.

Ensure that the logs closest to the band sawmill are secured with heavy-duty straps so that they can not roll towards the sawmill while the sawmill is running. [*See illustration 2*]

LOADING LOGS

WARNING! Risk of crush injuries between log and band sawmill.

Always stand at the side of the log table when handling logs [*see illustration 3, area A*]

Avoid standing between the log table/log stack and the band sawmill. The log stack must always be secured with reliable straps when you are within area B [*see illustration 3*].

The logs should be rolled from the log table. Do not drop them onto the band sawmill.

When loading a log:
1. Position the saw carriage at its rearmost position on the rails (the 'home' position).

2. When loading the log from the operator's side, raise the log supports to their highest position. When loading the log from the left side of the band sawmill, the log supports have to be moved to the opposite side of the bed (the operator's side). Then, fit them in their highest position. When the log lies stably on the bed, refit the log supports to the left side of the band sawmill.

3. If you use a removable ramp, it should be built and positioned so that there is no gap between the log table and the band sawmill.

4. Untie the straps that secure the front of the log pile.

5. Roll out a log.

6. Retie the front logs with the straps.

7. Carefully roll the log up against the log supports. Use a log turner/rotator. Centre the log laterally over the log bed cross bunks.

8. Adjust the log supports so that they support the log, but will not come into contact with the band blade when you are sawing. Lock the log supports in position.

9. Adjust the log clamps so that they come in the same position as the log supports, but on the opposite side of the log. Adjust the height of the log clamps to secure the log. Ensure that the log clamps will not come into contact with the band blade when you are sawing.

OPERATION INSTRUCTIONS

ALT:1

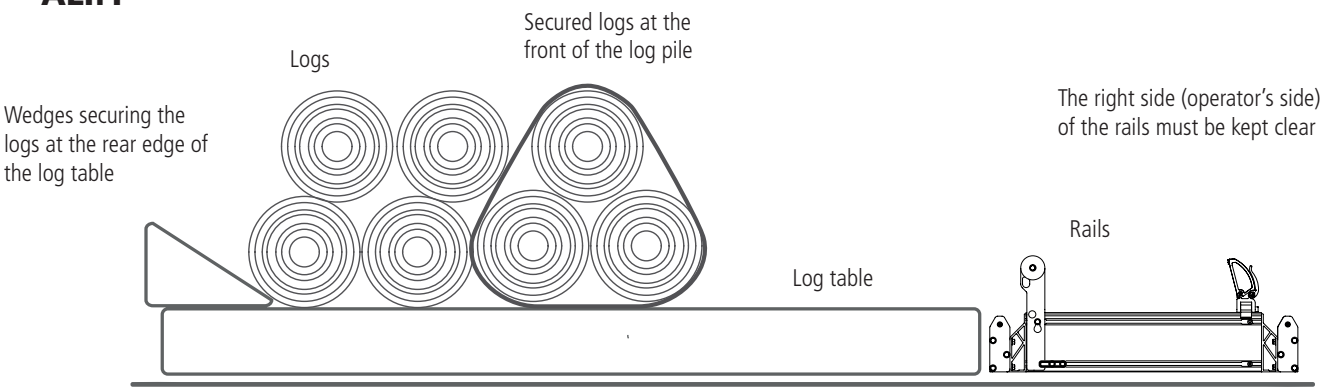

ALT:2

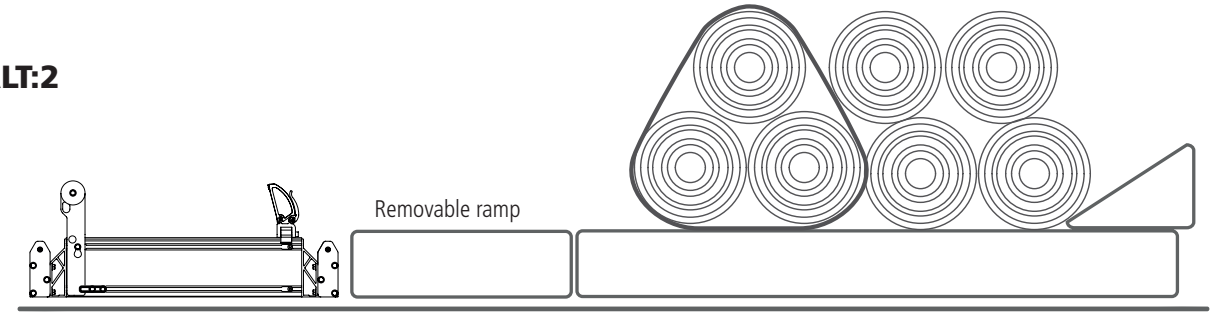

Illustration 2

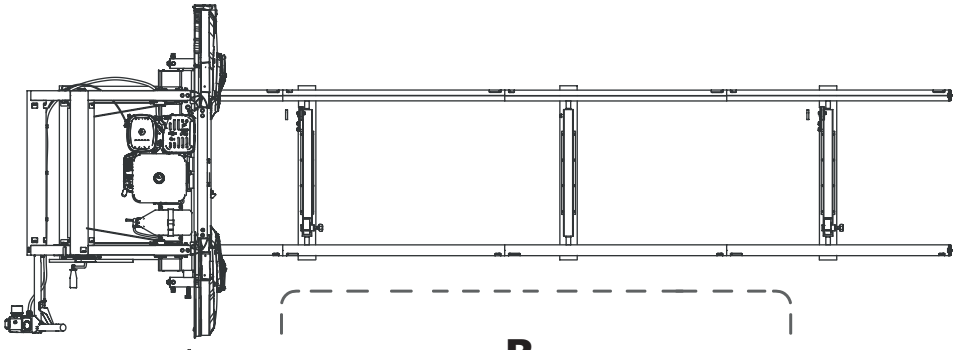

Illustration 3

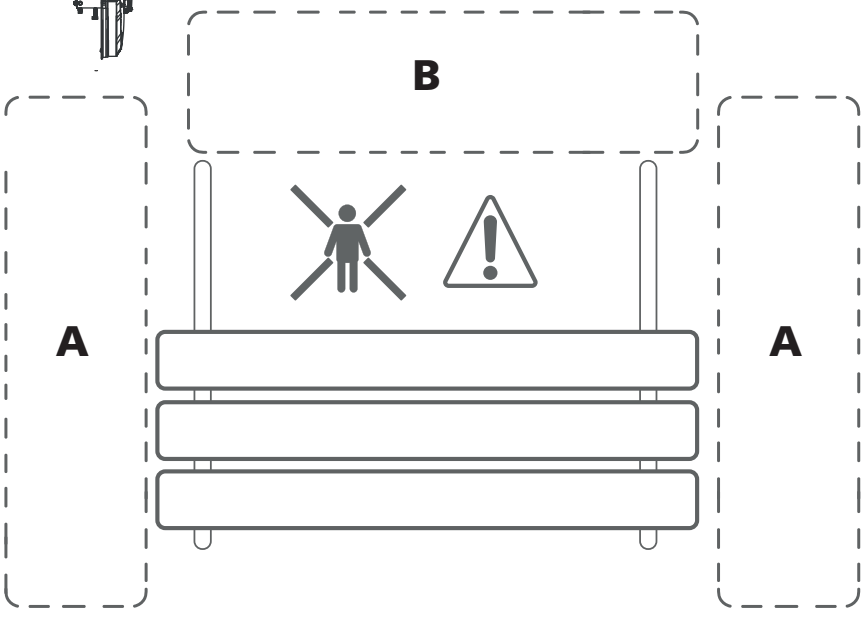

OPERATION INSTRUCTIONS

ADJUSTING THE CUT

You can adjust the position of the sawhead in steps to set the depth of cut. The depth of cut is set by using the crank on the sawhead. Crank the sawhead down until the mark on the desired scale comes in level with the pointer.

SAWING

WARNING! Cutting tools:

Always stand behind the saw carriage and keep both hands on the push handle while operating the machine. Never stand in front of the saw carriage or blade. Never pull the saw carriage back through the cut.

WARNING! Read and follow all the safety instructions described in the chapter *Safety Instructions* under the section *Before each cut*.

1. Before operating the sawmill, perform all safety checks described in the chapter *Safety Instructions* under the section *Every time before operating the band sawmill*.

2. Raise the log supports by unhitching them, then lifting them to the desired height and locking them in place.

WARNING! Risk of pinching.

Watch your fingers when lowering the log supports. Make sure that the log supports are properly and securely fitted in their adjustment notches.

3. Use a log turner/rotator when rolling a log on the log bed. Centre the log on the log bed and roll it up against the log supports. Check the position of the log on the log bed. To be able to cut through the whole length of the log, the log should not protrude past the last cross bunk.

4. Rotate the log to a position that will give the best sawing yield.

5. If the log is distinctly tapered from one end to the other, you have to compensate for this to get the best possible result. You always want the cut to run parallel to the centre line of the log. Place a shim between the log bed cross bunk and the narrow end of the log.

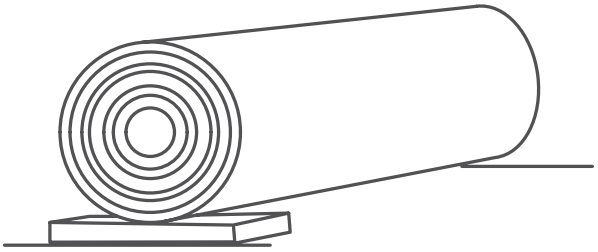

A shim placed under the narrow end of the log.

OPERATION INSTRUCTIONS

6. Secure the log with the log clamps. Adjust the height of the log clamps. Ensure that they will not come into contact with the blade when you are sawing.

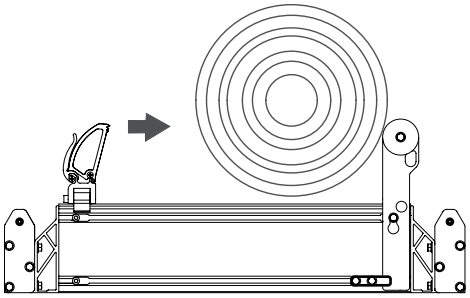

Log clamp. We recommend that you use two log clamps.

7. Set the height of the sawhead for the first cut by turning the crank that adjusts depth of cut. You raise the sawhead by turning the crank clockwise, while turning the crank counterclockwise will lower the sawhead.

8. Check that the blade will not come into contact with the log supports and log clamps.

9.

10. Open the valve for blade cooling to provide a small trickle onto the blade guide roller/band blade.

11. Before each cut, perform all safety checks described in the chapter *Safety Instructions* under the section *Before each cut*.

12. Stand behind the push handle of the saw carriage and start the engine. Give gas by squeezing the throttle handle all the way in to its end position. This brings the engine up to its operating speed and the band wheels/blade start rotating.

13. With both hands on the push handle, gently push the saw carriage forward until the blade begins to cut into the log. When the band blade is completely inside the log, you can increase the feed rate. Adjust the feed rate so the cut becomes straight with a clean finish. Lower the feed rate when cutting through knots in the wood and choose a lower speed when cutting large or hard logs. Also lower the feed rate when you come to the end of the log.

14. As soon as you have sawn through the log, release the throttle handle and let the blade come to a complete stop. Tip: If you release the throttle just before the blade comes out through the log end, the blade will stop faster.

15. Remove the slab from the log.

16. Raise the sawhead slightly and, by hand, roll the saw carriage back to the starting position.

17. Set the height for the next cut. Use the crank and the depth of cut scales.

18. Rotate the log 180° so that the freshly sawn surface rests on the log bed.

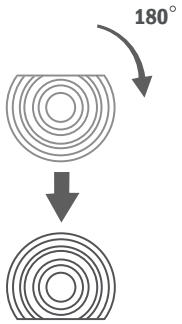

Rotate the log 180° so that the freshly sawn surface rests on the log bed

Push handle and throttle

OPERATION INSTRUCTIONS

Lower the log supports and the log clamps so that they will not come into contact with the blade and clamp the log in position. Continue sawing until you reach the desired cant width.

Rotate the log 90° so that one of the freshly sawn sides rests flat against the log supports, and then clamp the log in position. Now you can make the third cut and then produce boards. Here, you may need to compensate for taper in the log. Lower the log support gradually and cut up the log with the bark facing down.

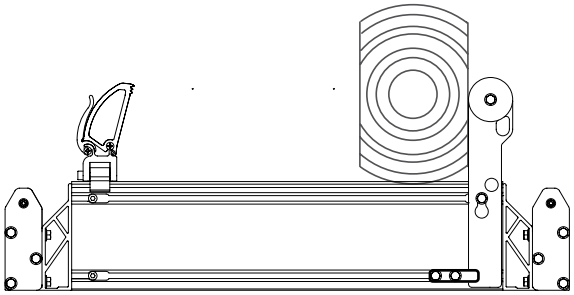

Rotate the log 90° so that one of the freshly sawn sides rests flat against the log supports, and then clamp the log in position.

19. When you have rotated the log the last time to cut the last boards, you have to calculate where you should take the cut to make the last cut agree with the calculation. Check this by lowering the blade until it rests against the log. Now you can read the absolute scale to see the amount of wood left under the blade. Set the sawhead to the desired height.

TIP: The easiest way is to wait to rotate the log until there only remains material for one 2" board. If you do so, there is no need for calculation.

HANDLING SAWN TIMBER

When cutting the cant into boards, you can either immediately lift the boards off the cant, or you can leave them there while cutting more boards before handling the timber.

When you are going to lift boards from the rails, ensure that the saw carriage is in its locked position at one of the rail ends. Then, move the sawn timber to a timber stack. Place spacers between the layers of boards to facilitate drying.

MAINTENANCE

MAINTENANCE

The regular maintenance that is expected to be performed by the operator, is described in this chapter. Be sure to perform the prescribed maintenance intervals as this forms the basis for a good functionality of the sawmill.

WARNING! Risk of serious injury:

Before performing any service or maintenance on the machine: turn the ignition key to the OFF position and close the fuel valve.

WARNING! Risk of lacerations:

Coiled band blades can unpredictably spring apart with considerable force. Handle coiled band blades with utmost care.

WARNING! Risk of fire:

Do not smoke or perform any work (welding, sharpening blades, etc.) on the band sawmill that can produce sparks or flames near the engine, fuel tanks, fuel or other flammable material.

If you spill fuel on the machine when refueling, wipe this up immediately. If you get any fuel on your clothes, change clothes immediately.

Never operate the engine if there is a fuel or oil leak. Always turn the engine off before refuelling.

BOLTED JOINTS

Check and, if necessary, retighten the machine's bolted joints at each maintenance interval. It is important that the bolted joints are tightened with the correct torque.

MAINTENANCE

HANDLING BAND BLADES

WARNING! Cutting tools: Incorrect handling of band blades can cause life-threatening injuries. Band blades are extremely sharp.

WARNING! Risk of lacerations.

When handling band blades:

- always wear protective gloves (class 1) of leather
- always wear close-fittiing safety goggles or visor
- wear protective footwear with saw protection, steel toe cap and non-slip sole
- always wear full-length protective pants
- keep people and pets at a safe distance, at least 5 m away.

CHANGING BAND BLADES

It is crucial to change the blade regularly to ensure peak perfomance. Normally, you can saw 15-30 logs before changing blades, but this depends a lot on how clean the bark is. Using dull band blades will result in wavy or imprecise cuts, reduced blade life and greater risk of blade breakage. Always wear protective gloves when handling band blades.

To remove a band blade:
1. Release the tension on the blade by turning the counter-clockwise.

2. Open the band wheel guards.

3. Remove the blade from the band wheels.

To install a new band blade:
1. Fit the blade under the blade guides and then around the band wheels. Make sure that the saw teeth point towards you.

2. Rotate the band blade by hand in the direction of the cut to check that the blade still tracks straight. See the section *The lengthwise position of the blade* and *Adjusting the position of the blade*, on page 37.

3. Close the guards over the band wheels.

4. Lock the guards.

LUBRICATION POINTS

In order to keep the sawmill in good condition for many years, and to have a problem-free ownership, it is important to lubricate the sawmill components as described below.

- Lubricate immediately after assembly, before starting to use the sawmill.
- Lubricate every 50 hours of operation, but at least once a year.

The lubricants you should use on your sawmill are:

- Superflo SKU: 9999-000-5115
- Universal oil SKU: 9999-000-5105
- Silicone SKU: 9999-000-5110
- Grease ISO-L-XCCIB2

The top rail sections on which the saw bogie runs
Lubricant: Universal oil

The blade tensioning T-handle
Lubricant: grease or Superflo

Unscrew the handle and grease its threads generously.

The lift winch shaft
Lubricant: Superflo

Lubricate from the outside on both sides.

The throttle wire and handle of the engine
Lubricant: Superflo

Lubricate the handle joint and spray oil into the wire from its ends. If the wire is difficult to move, remove the wire from its coating and lubricate the whole wire and spray oil into the wire coating.

The legs of the saw bogie
Lubricant: Silicone

Lubricate the sliding surfaces of the sawhead and the plastic guides.

MAINTENANCE

CLEANING THE BAND SAWMILL

Clean the band sawmill after each work shift. Remove sawdust and wood debris inside the band wheel guards and on and around the rails. Wipe painted surfaces and plastic parts with silicone spray (ref. no: 9999-000-5110). Lubricate moving parts with Super Flo (ref. no: 9999-000-5115).

WATER TANK

If the temperature falls below freezing, you should empty the water tank and tubes. At temperatures below 0°C, you can use windshield washer fluid. Never use glycol or flammable liquids as a coolant.

HORIZONTAL ALIGNMENT OF THE BAND BLADE

Before each work shift, check that the blade is parallel with the log bed.

ENGINE

Check the oil level in the engine before each work shift. Follow the maintenance schedule in the user manual for the engine.

SAWHEAD LIFTING CHAINS

Inspect the sawhead lifting chains for any wear or damages. Replace with new chains if necessary.

INSPECTION OF SAFETY FEATURES

Before each work shift, inspect the working order of following safety features: Check that the throttle handle returns to its neutral position when released, so that the engine goes down to idle. If not, lubricate the throttle wire with Super Flo (SKU: 9999-000-5115). Check that the interlock safety switch in the hinge of the band wheel guards works. Check by opening the band wheel guards while the engine is turned off and listen for the safety switch disconnecting.

LEVEL ALIGNMENT OF THE RAILS

Before each work shift, check that the rails are level, especially in winter when frost can heave the ground.

BAND WHEEL BELTS

Regularly inspect the condition of the band wheel drive belt and the band wheel belt. Replace worn and damaged parts. Regularly check the tension of the drive belt and adjust if necessary.

BLADE GUIDES

Regularly inspect the condition of the blade guides and check that the distance between the flange on the blade guide and the blade is within 3-5 mm. Replace worn or damaged blade guides.

BAND WHEEL GUARDS

Every hour of operation, or when you change band blade, clean the inside of the band wheel guards and the blade from build-up of sawdust and wood debris.

BAND BLADES

Replace the blade with a new, sharp blade after approx. every two hours of efective sawing.

TROUBLESHOOTING

PROBLEM/SYMPTOM	PROBABLE CAUSE	SOLUTION
The blade quickly loses its sharpness	• Dirty logs • The blade is worn out	• Avoid dragging the logs over the ground. • Debark the log where the blade is going to cut. • Square the logs before cutting boards, to minimize the cuts into bark. • Replace the blade with a new one.
Wavy cuts	• Dull blade • The feed speed is too high • The feed speed is too low • Sawing through a partly frozen log	• Resharpen the blade. • Lower the feed speed. • Increase the feed speed. • Let the log fully thaw or fully freeze before sawing it. **TIP:** Do not use a slower sawing speed when the blade is entering the log, but cut into the log end with the same sawing speed you are planning to have for the rest of the cut.
The blade dives or rises when sawing	• Insufficient blade tension • The feed speed is too high • The blade is damaged • The blade does not track correctly on the band wheels	• Increase the blade tension. • Lower the feed speed. • Replace the blade with a new one. • Install the blade correctly and adjust the tracking.
Blade breakage	• The blade is worn out • Dull and/or incorrectly installed blade • The blade tension is too tight • The blade guide rollers are not aligned with the band wheels • Worn band wheel belts. This makes the blade running directly on metal	• Replace the blade with a new one. • Resharpen the blade. • Reduce the blade tension. • Adjust the blade guides. • Replace the belts on the band wheels with new ones
Uneven board thickness	• The log bed flexes due to insufficient support	• Support the rails/log bed as outlined in the instructions in this manual
The blade does not track correctly and slips off the band wheels	• The band wheels are incorrectly adjusted • Worn band wheel belts	• Adjust the band wheels as outlined in the instructions in this manual • Replace the belts with new ones
The blade does not cut	• The blade is installed backwards	• Remove the blade and turn the blade inside out and reinstall it. • When the sawmill is powered by an electric motor, check that the motor is running in the correct direction. If not: Reverse the phase of the electric motor.
The blade does not slacken after releasing the blade tension	• The blade tension assembly is sticking	• Push the handle inwards.
The sawhead is stiff when raised or lowered	• The vertical guides are too tight • The sawhead lifting winch drum is dry	• Lubricate with silicone and, if necessary, loosen them slightly. • Lubricate with Superflo.
The sawhead is rattling when going down	• The rails are not level and cause the saw bogie to twist	• Level the rails as outlined in the instructions in this manual.
The blade overheats during operation	• The water tank is empty • The water valve is closed	• Refill with water. • Open the water valve.
The engine does not start	• The ignition key is in the "OFF" position • The interlock safety switch on the blade guards is disconnected	• Turn the ignition key to the "ON" position. • Check the working order of the interlock safety switch.

EU declaration of conformity

In accordance with Directive 2006/42/EG, Annex 2A

Logosol AB
Arkivvägen 6
871 53 Härnösand, Sverige

herewith declares that: **LOGOSOL B701**

has been manufactured in conformity with the Machinery Directive 2006/42/EG
and the EMC Dierctive 2014/30/EU

and has been manufactured in conformity with the following harmonized standards:
EN ISO 12100:2010, EN 60204-1:2018,
EN 50370-1:2005, EN 50370-2:2003.

Notified body, 0404,RISE SMP Swedish Machinery Testing Institute AB, Box 7035, 750 07 Uppsala, Sweden, has executed EC type-examination according to Directive 2006/42/EG, article 12, paragraph 3b. The EC type examination certificate has the number: 0404/17/2408

The delivered band sawmill corresponds to the machine that was subject to EC type-examination.

2025-08-12

ROBERT BERGLUND, CEO

LOGOSOL
Arkivvägen 6, SE-871 53 Härnösand, SWEDEN
+ 46 611-182 85 | info@logosol.com
www.logosol.com