LOGOSOL

USER MANUAL

ORIGINAL USER MANUAL.

SKU: 0458-395-0861

REV: 4

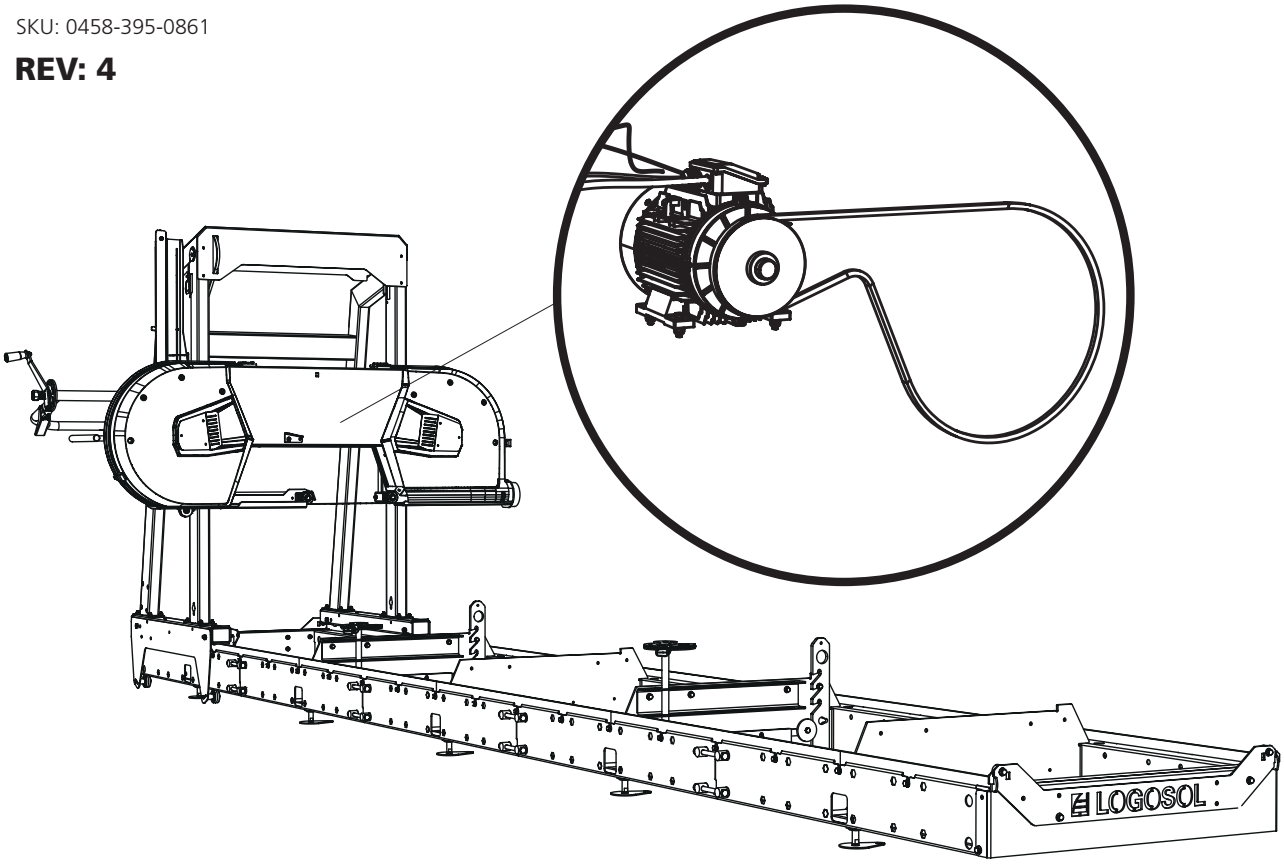

4.6 / 8 / 12 KW

This manual describes installation of the electric motor
for the Logosol band sawmill.
Please see the user manual for your band sawmill
for information on assembly, settings and safety instructions.

EN

LOGOSOL

4,6 / 8 / 12KW



Read through all the set-up instructions before starting to set up, then follow the instructions step by step as you work.



After assembly, follow the instructions under *Setup sequence* in the sawmill manual to complete setup before starting the machine.

1

The electric motor comes with the hinge switch connected. Assembly consists of installing the motor on the motor shelf, as well as mounting the pulley and drive belt. The illustrations show the hole patterns for installing the 4.6 / 8 / 12 kW electric motors. Follow the assembly instructions, then run through the setup sequence for the machine when assembly is complete.

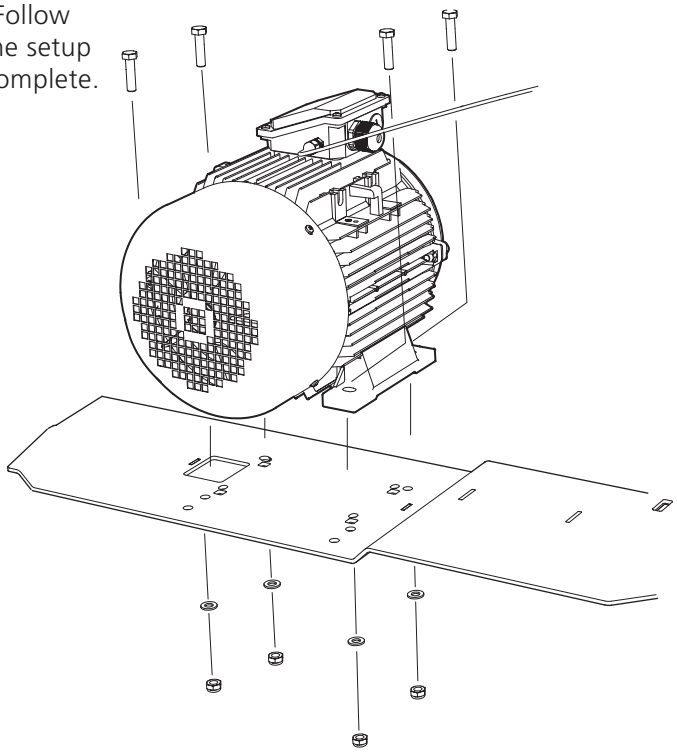

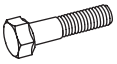

4 x – M10x40



4 x – M10



8 x – M10

Top view:

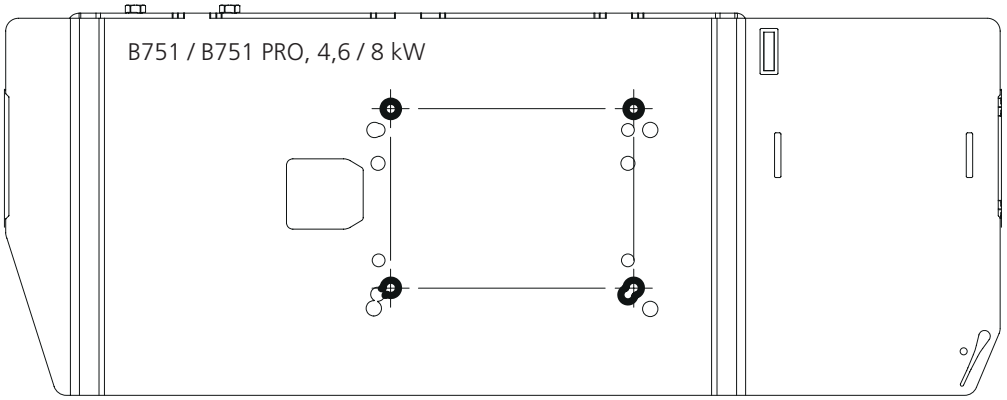

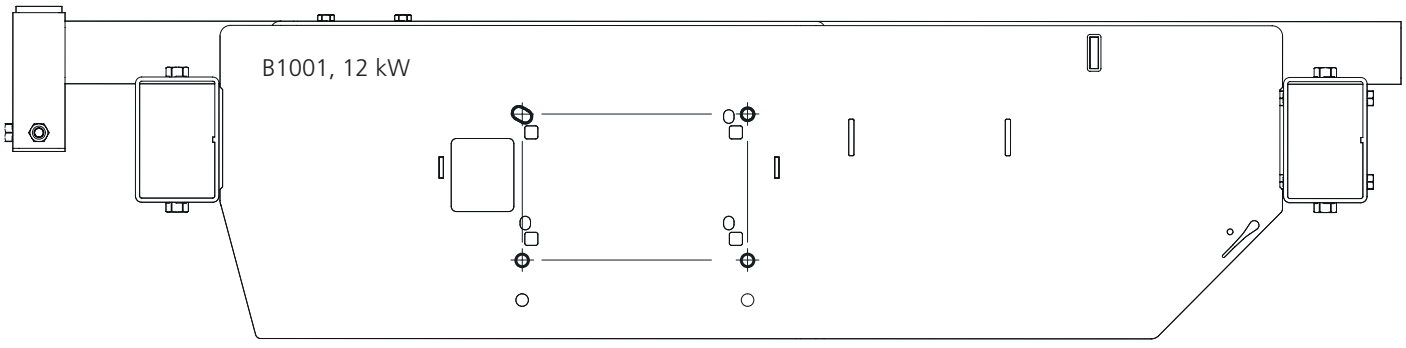

LOGOSOL

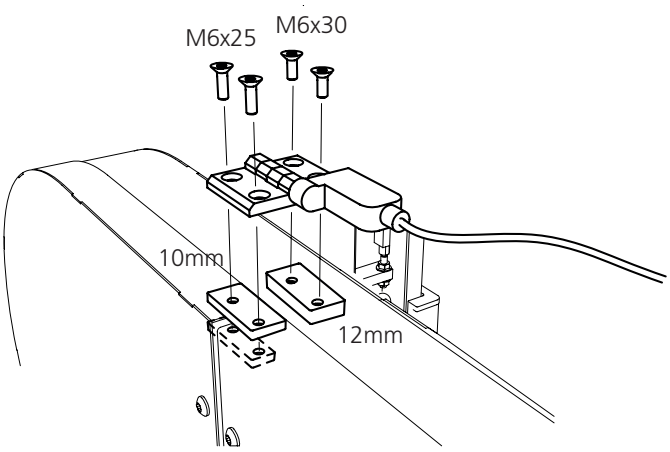

2

2 x – M6x25

2 x – M6x30

1 x – 03-01997

10mm

1 x – 03-02080

12mm

2 x – 03-02182

3

1 x

1 x

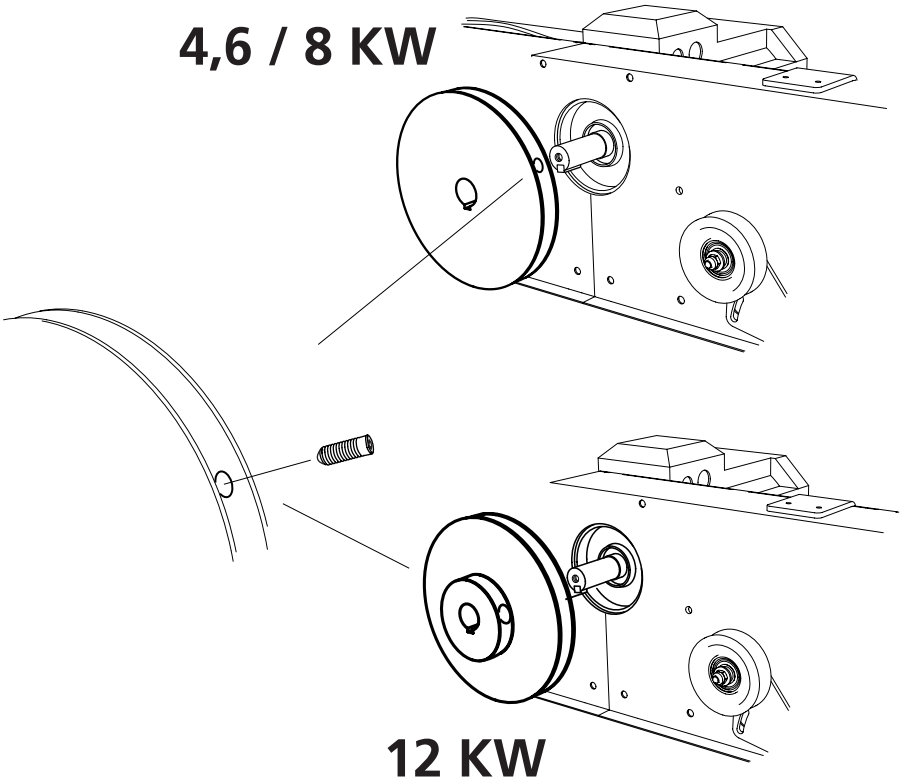

4

1 x – 9020-011-0091

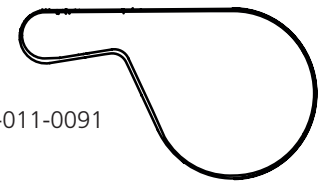

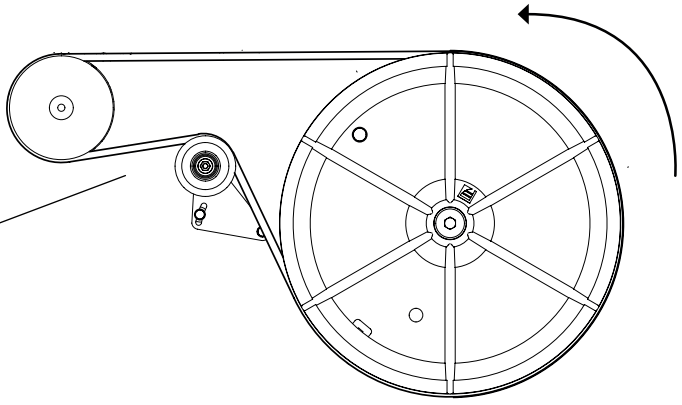

5

4 x – M6x12

4 x – M8

2 x – M8x60

2 x – M8

2 x – M8

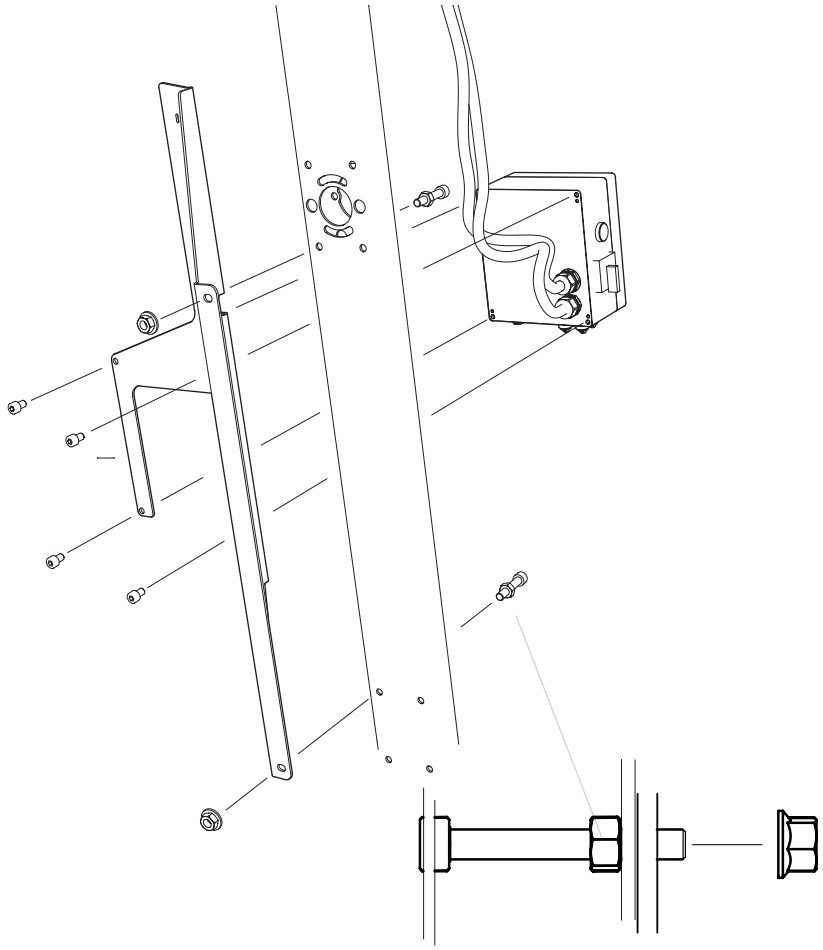

6

2 x – M6x10

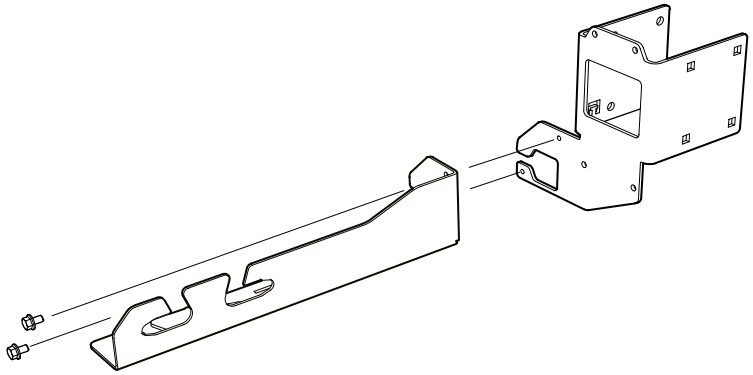

LOGOSOL



7

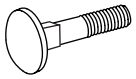

4 x – M8x120



4 x – M8

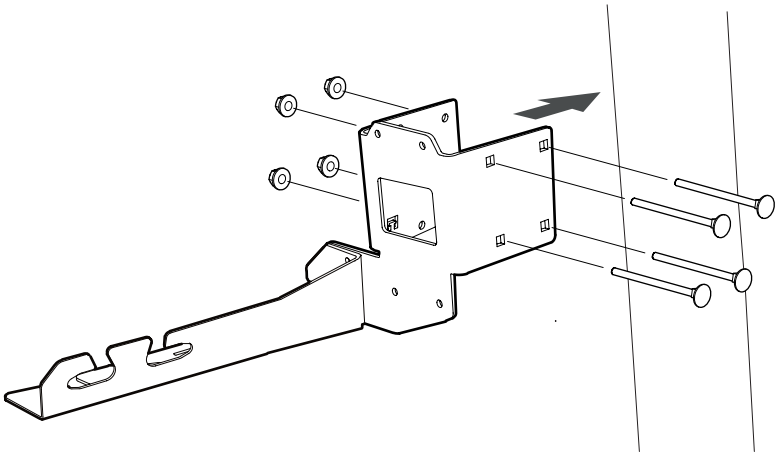

8

A  4 x – M6x16

B  2 x – M5x16

 4 x – M6

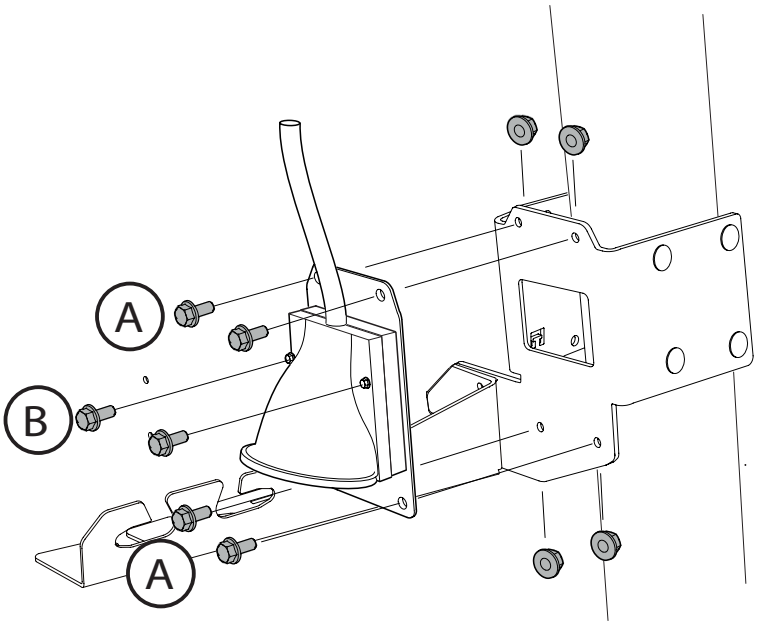

9

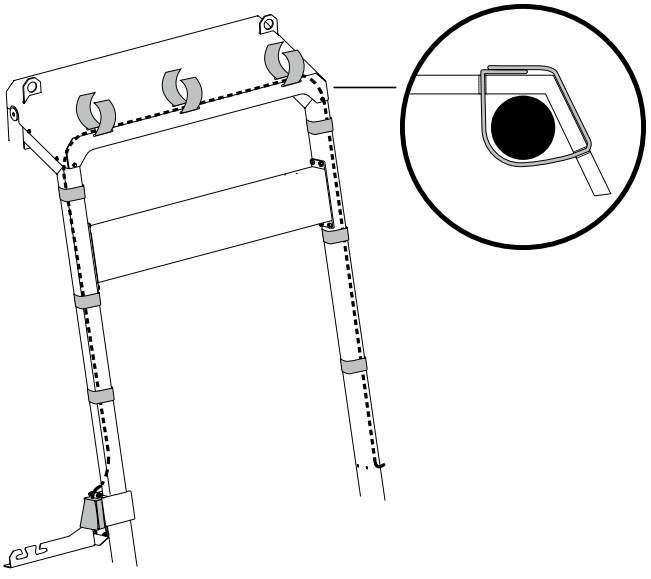



10

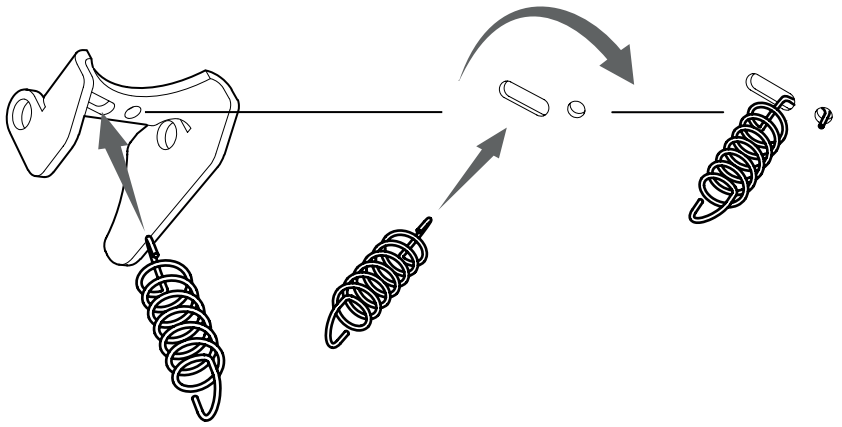

11

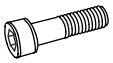

1 x – M5x50

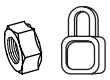

1 x – M5

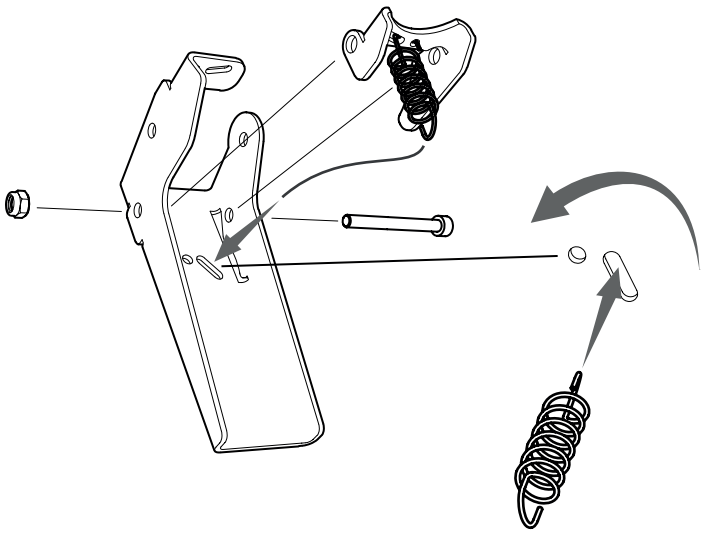

12



2 x – M5x16

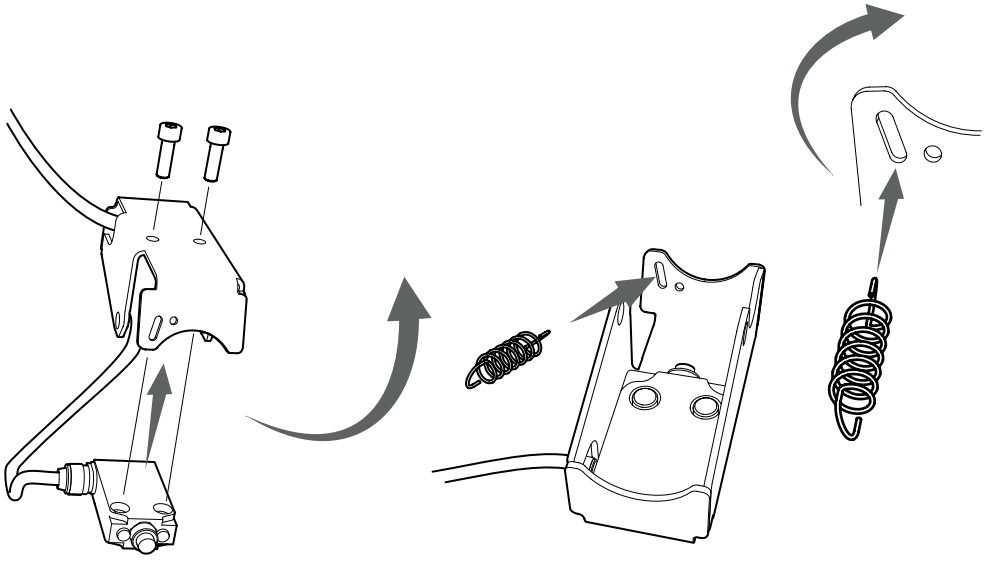

LOGOSOL



13

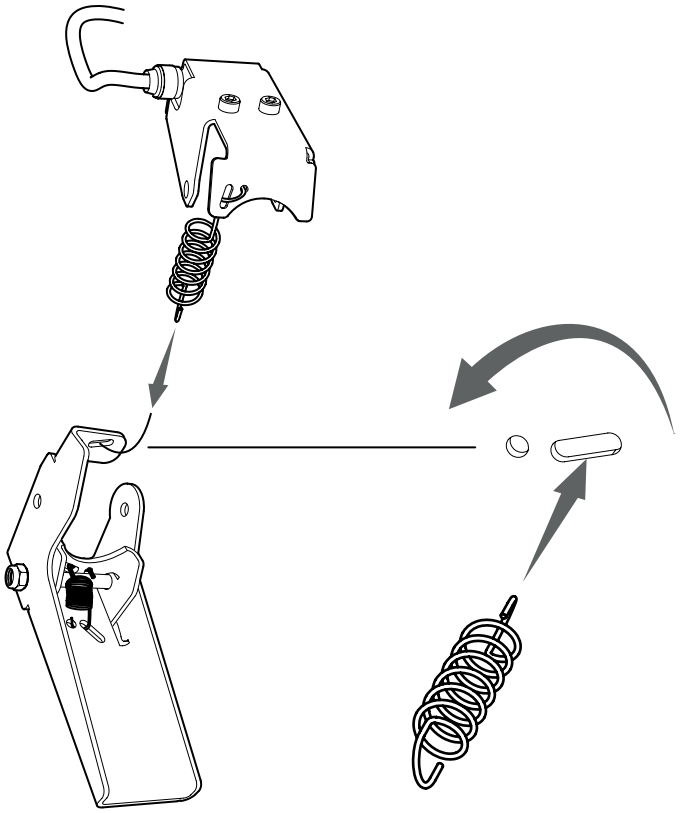

14

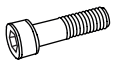

1 x – M6x50

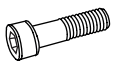

1 x – M5x50

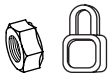

1 x – M6

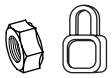

1 x – M5

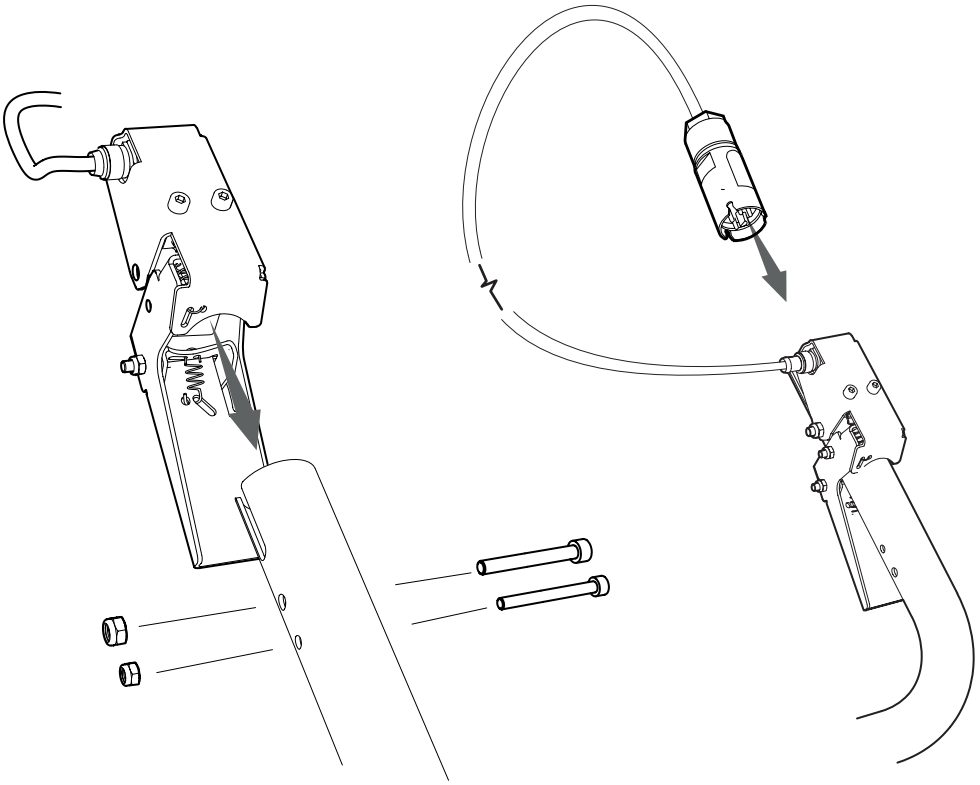

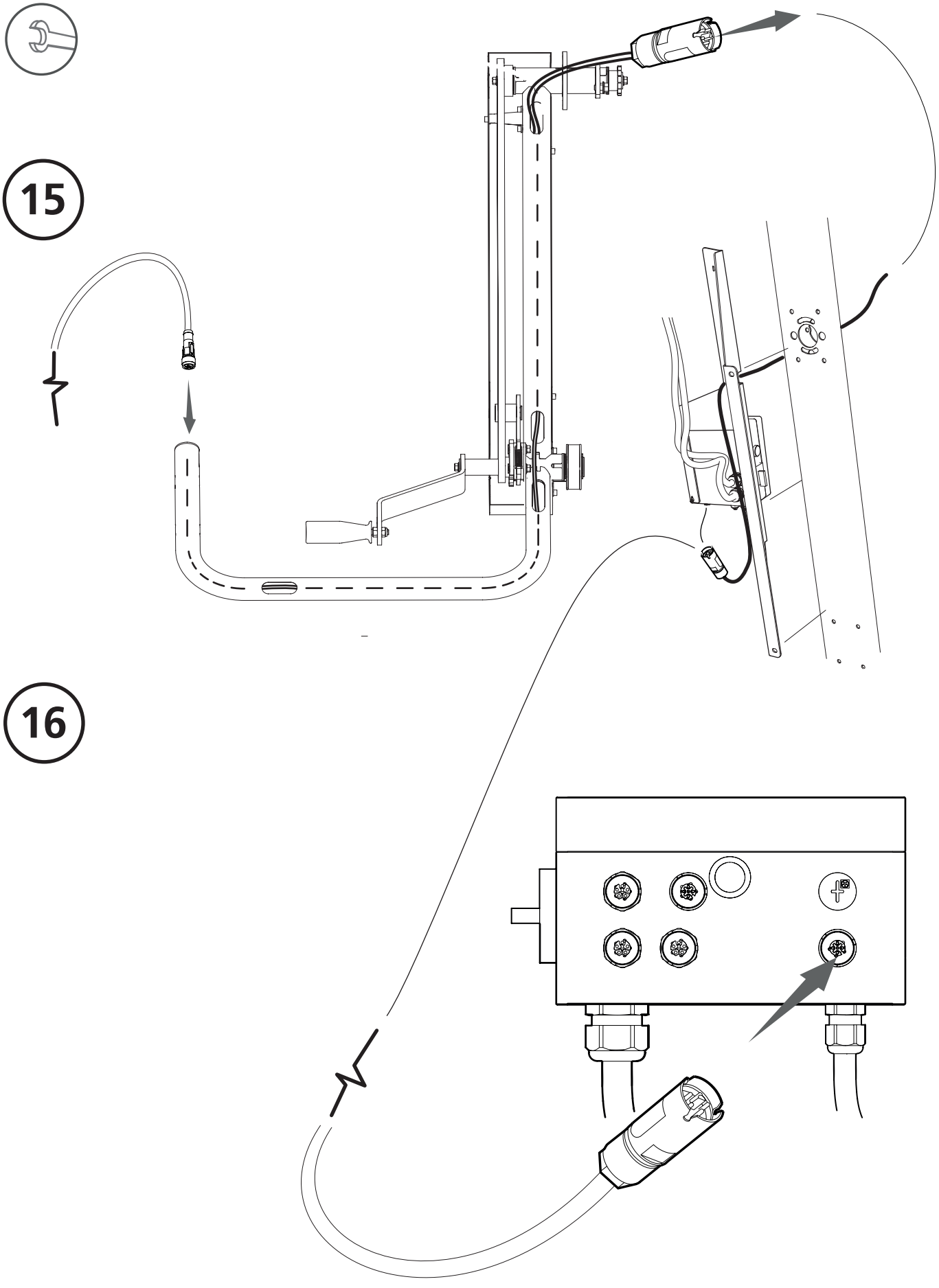
15
16

TURN ON/OFF THE SWITCH BOX

Turn the dead man's switch to (1) to turn on the power supply to the machine.

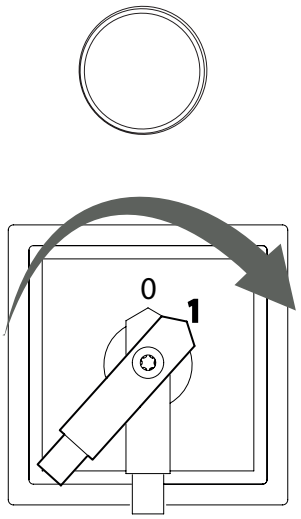

START THE MOTOR

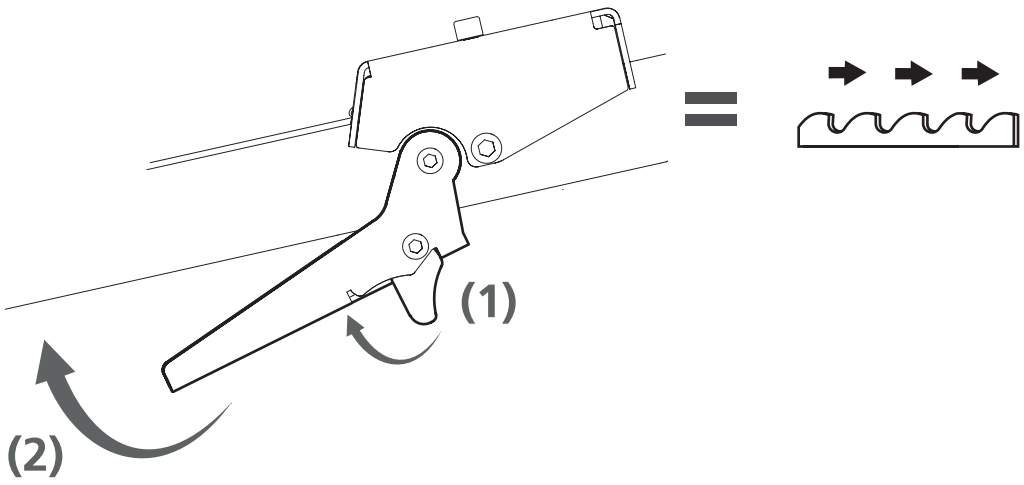



Well done!

Now you have finished installing the motor, go back to the manual for your band sawmill and carry on with the setup sequence, starting at the point as indicated in the instructions below.

SETUP SEQUENCE



Read through all the set-up instructions before starting to set up, then follow the instructions step by step as you work.



IMPORTANT!

It is important to adjust the saw head before starting to ensure satisfactory sawing and the correct functioning of the sawmill. Follow the setup sequence carefully! Certain adjustments affect other machine settings.

Mains cable, 400 V 3-phase, for connecting Logosol machines:

The machine draws a lot of current and places special demands on the connection.

- A new cable should be used to ensure good conductivity.
- The cable must not be stored outdoors for long periods and must be handled with care. For example, it must never be driven over by vehicles.

Recommended cable length:
0–25 metres: minimum 2.5 mm^2
Over 25 metres: minimum 4.0 mm^2

- For example, you can run 25 m of 4 mm^2 cable and a final section of max. 25 m of 2.5 mm^2 cable.
- You should not join more than two cables.
- The shorter the connection cable, the better the machine's performance.

NOTE: If the extension cable is too thin or in poor condition, the motor loses starting torque and torque, causing damage to motors, relay contacts and other electronics. When a motor or contactor stops working, it is almost always because it has been supplied with insufficient current. No warranty claims apply to this type of damage

LOGOSOL

Arkivvägen 6, SE-871 53 Härnösand, Sweden
+46 611-182 85 | info@logosol.com | www.logosol.com