LOGOSOL

USER MANUAL

ORIGINAL USER MANUAL.

Art. nr: 0458-395-5491

REV: 2

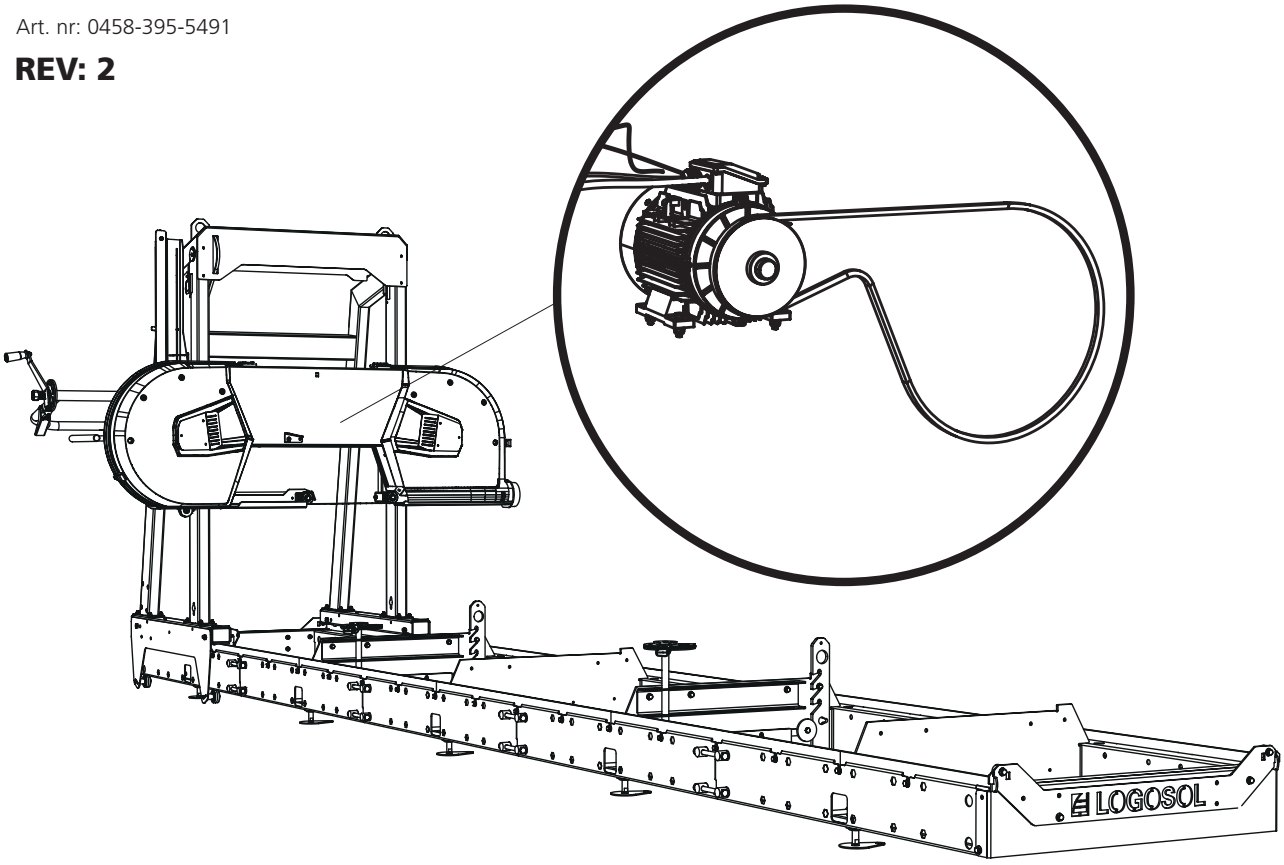

4,6 / 8 / 12 KW

01-00892

CUT SET RETRO-FIT

This manual describes installation of the electric motor
for the Logosol band sawmill.
Please see the user manual for your band sawmill
for information on assembly, settings and safety instructions.

EN

LOGOSOL

4,6 / 8 / 12KW



Read through all the set-up instructions before starting to set up, then follow the instructions step by step as you work.



After assembly, follow the instructions under *Setup sequence* in the sawmill manual to complete setup before starting the machine.



1

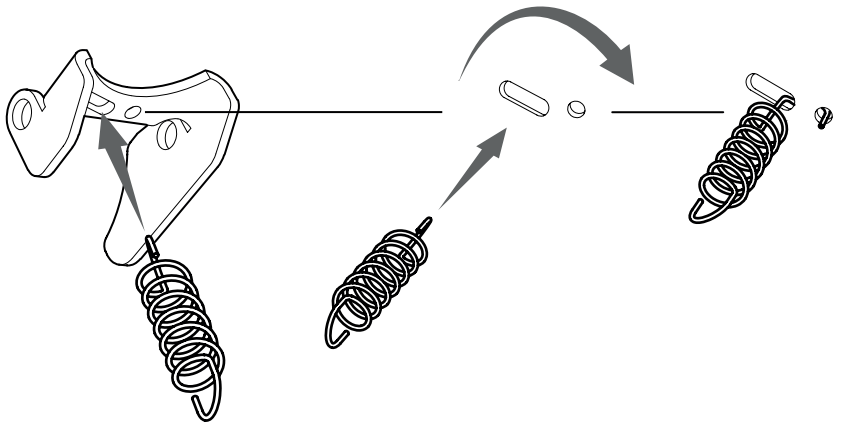

2

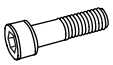

1 x – M5x50

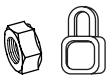

1 x – M5

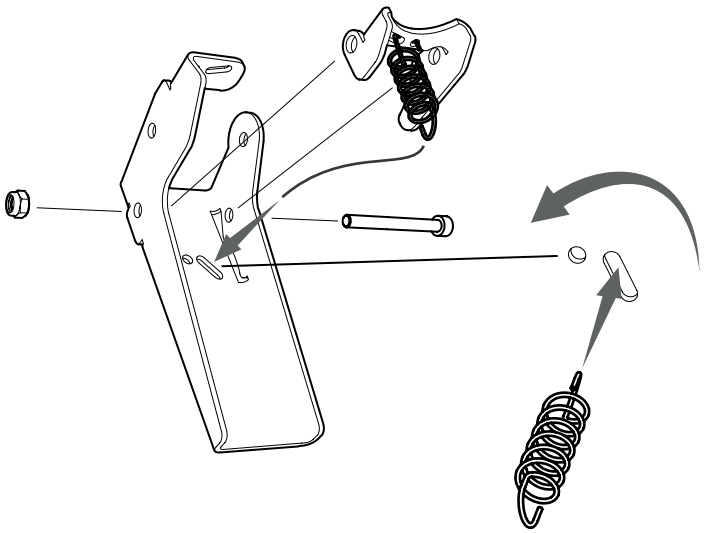

3



2 x – M5x16

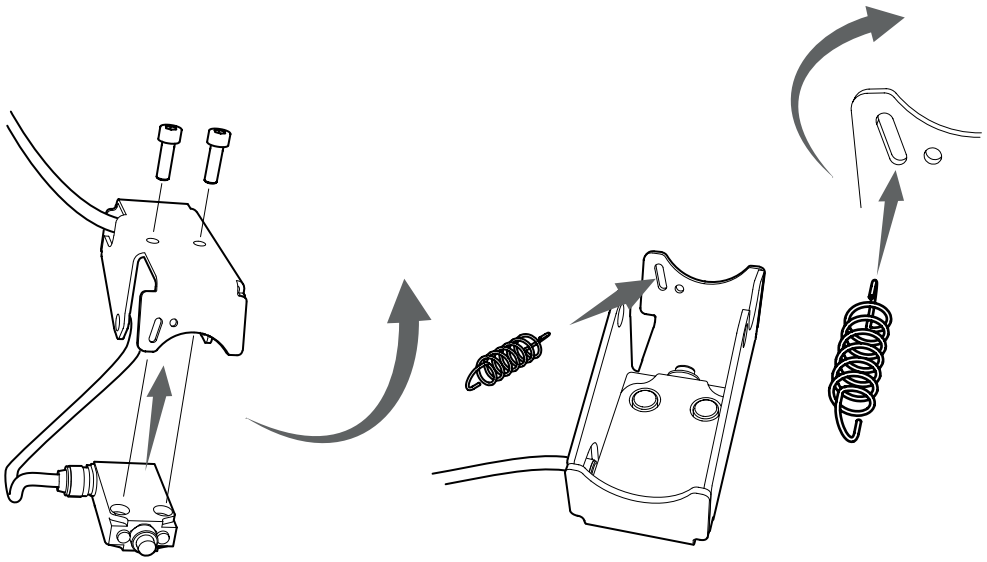

LOGOSOL



4

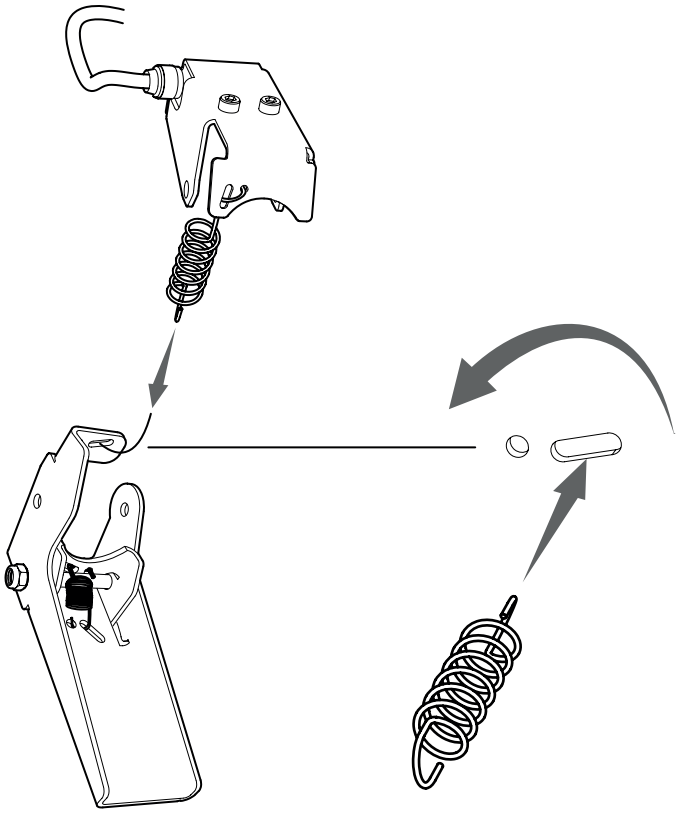

5

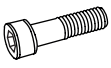

1 x – M6x50

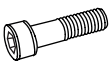

1 x – M5x50

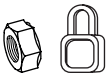

1 x – M6

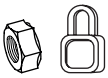

1 x – M5

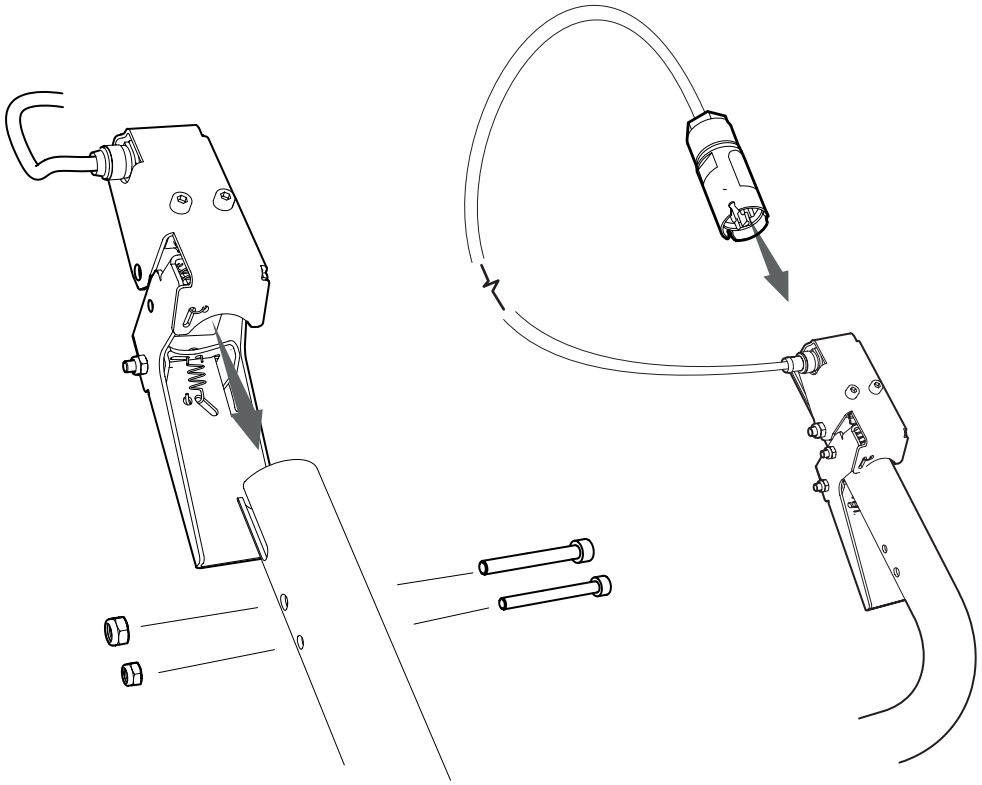



6

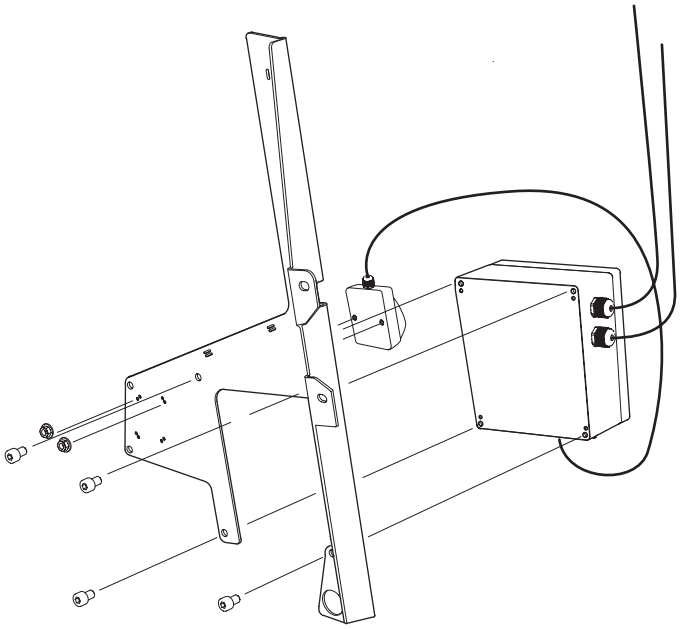

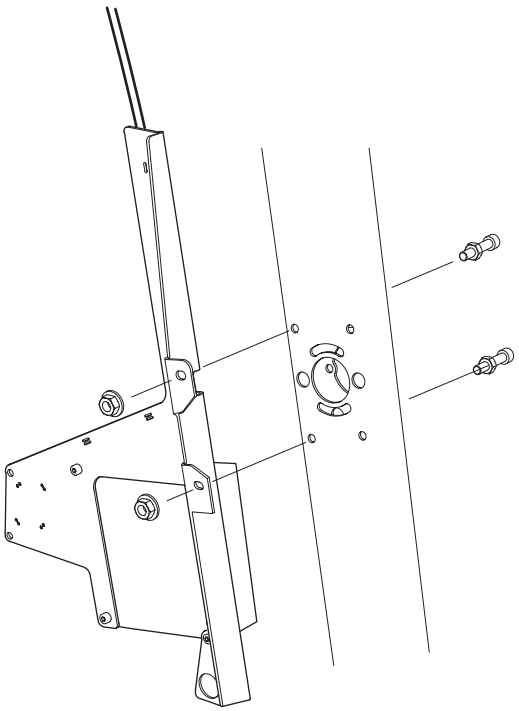

7

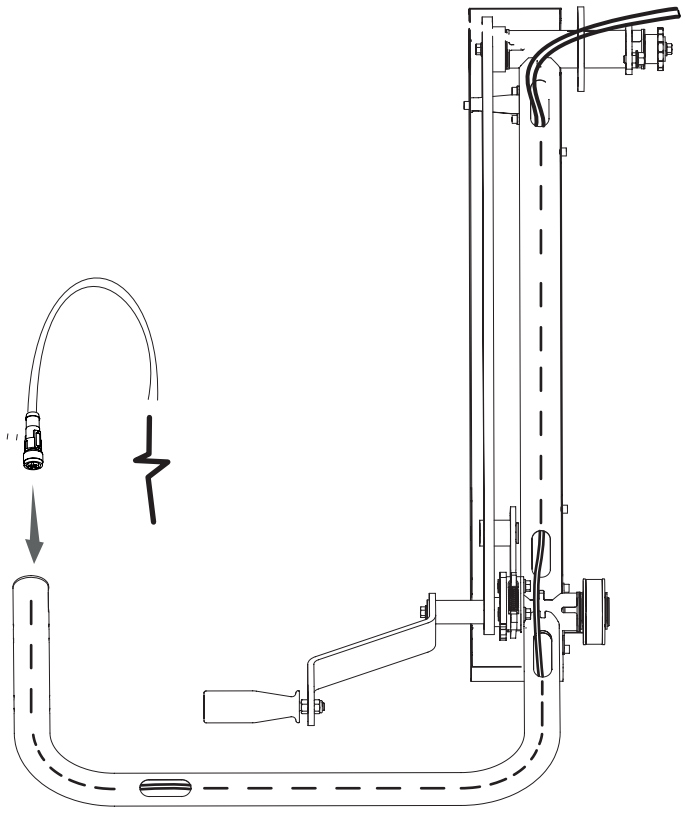

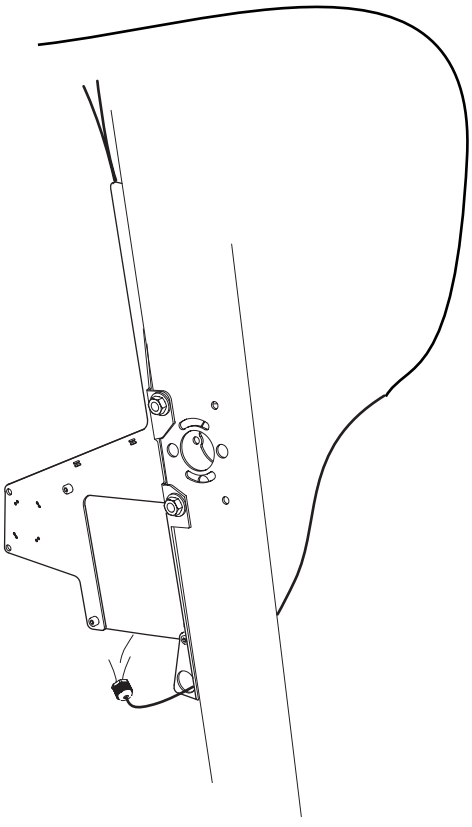

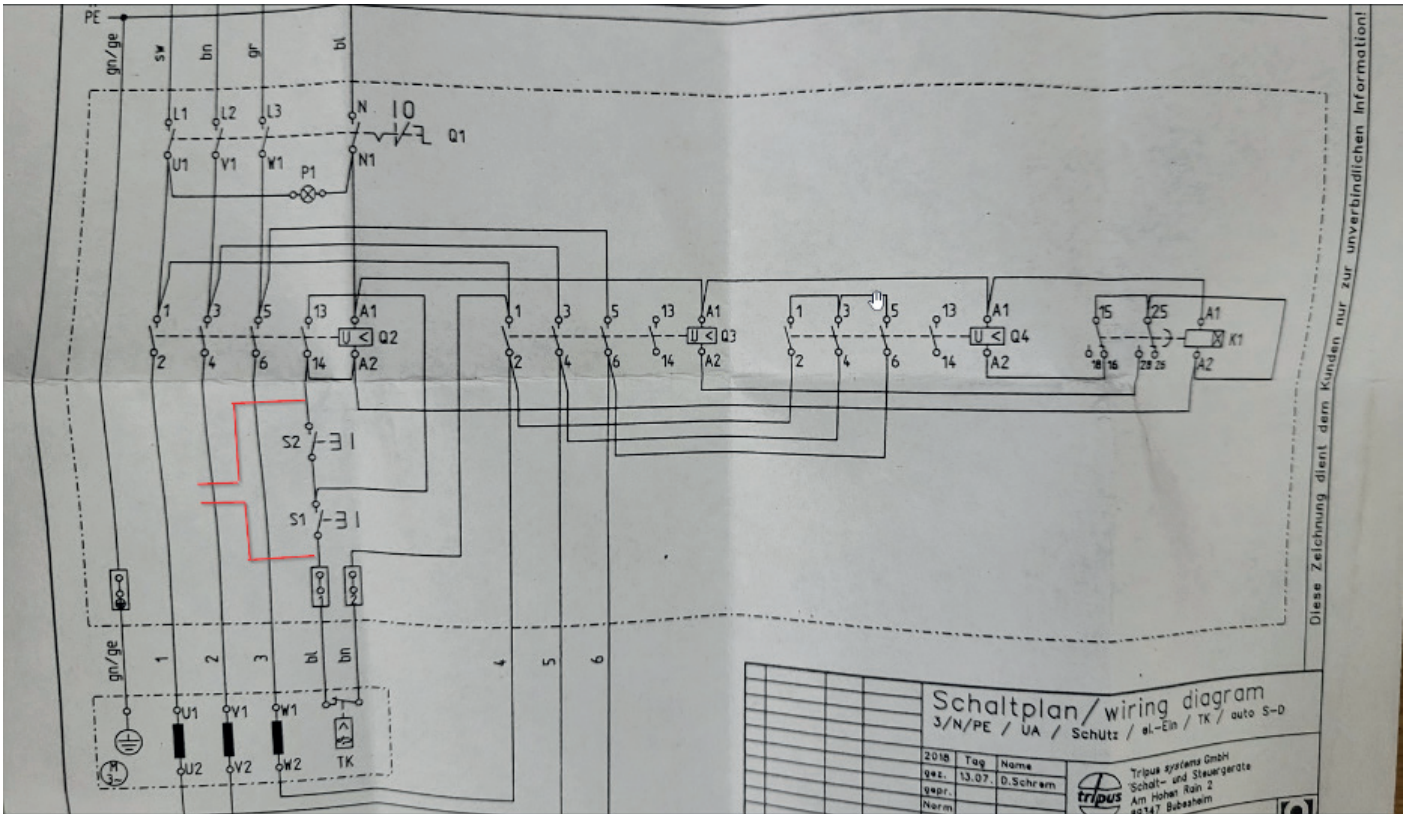
PE
gn/ge
sw
bn
gr
bl
L1
L2
L3
N
10
Q1
U1
V1
W1
P1
N1
Q2
Q3
Q4
K1
A1
A2
S2 -31
S1 -31
U2
V2
W2
TK
Schaltplan / wiring diagram
J/N/PE / UA / Schutz / el.-Ein / TK / auto S-D
Diese Zeichnung dient dem Kunden nur zur unverbindlichen Information!
tripus
Tripus systems GmbH
Schalt- und Steuergeräte
Am Hohen Rain 2

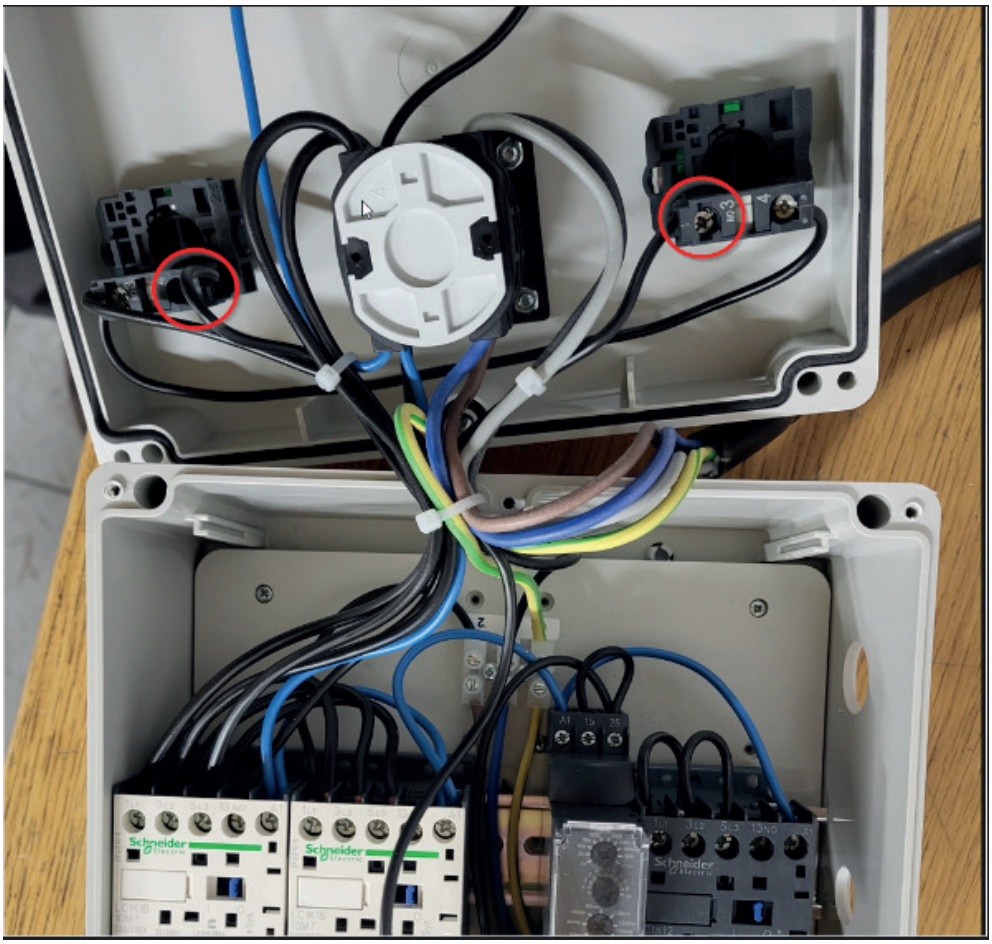
Schneider

TURN ON/OFF THE SWITCH BOX

Turn the dead man's switch to (1) to turn on the power supply to the machine.

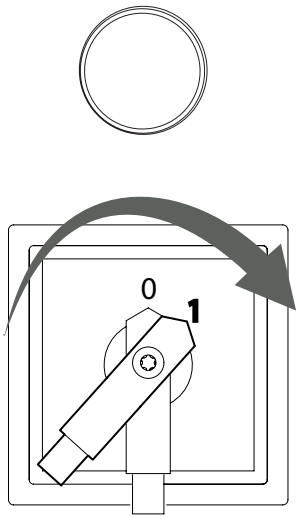

START THE MOTOR

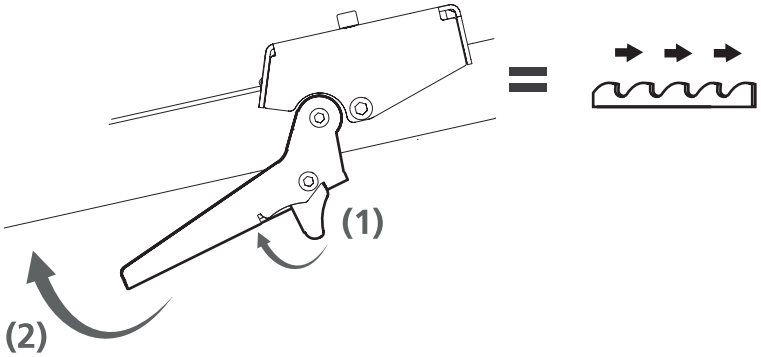

Main cable 400 Volt 3-phase for connection of Logosol machines:

The machine draws a high current and places special demands on the connection.

- A new cable should be used to ensure good conductivity.
- The cable must not be stored outdoors for long periods and must be handled with care. For example, it must never be driven over by vehicles.

Recommended cable length:

0–25 meters: minimum 2.5 mm^2
over 25 meters: minimum 4.0 mm^2

- For example, run 25 m of 4 mm^2 and the final section, max. 25 m, of 2.5 mm^2.
- You should not connect more than two cables in serie.
- The shorter the connection cable, the better the machine performance.

NOTE. If the extension cable is undersized or in poor condition, the motor will lose starting and torque power and thereby cause damage to motors, relay contacts, and other electronics. When a motor or contactor stops working, it is almost exclusively due to it being supplied with insufficient current. No warranty claims apply for this type of damage.



Well done!

Now you have finished installing the motor, go back to the manual for your band sawmill and carry on with the setup sequence, starting at the point as indicated in the instructions below.

SETUP SEQUENCE



Read through all the set-up instructions before starting to set up, then follow the instructions step by step as you work.



IMPORTANT!

It is important to adjust the saw head before starting to ensure satisfactory sawing and the correct functioning of the sawmill. Follow the setup sequence carefully! Certain adjustments affect other machine settings.

LOGOSOL

Arkivgatan 6, SE-871 53 Härnösand, Sweden
+46 611-182 85 | info@logosol.com | www.logosol.com