LOGOSOL

USER MANUAL

TRANSLATION OF ORIGINAL USER MANUAL

Ref. no. 0458-395-5301

REV: 10

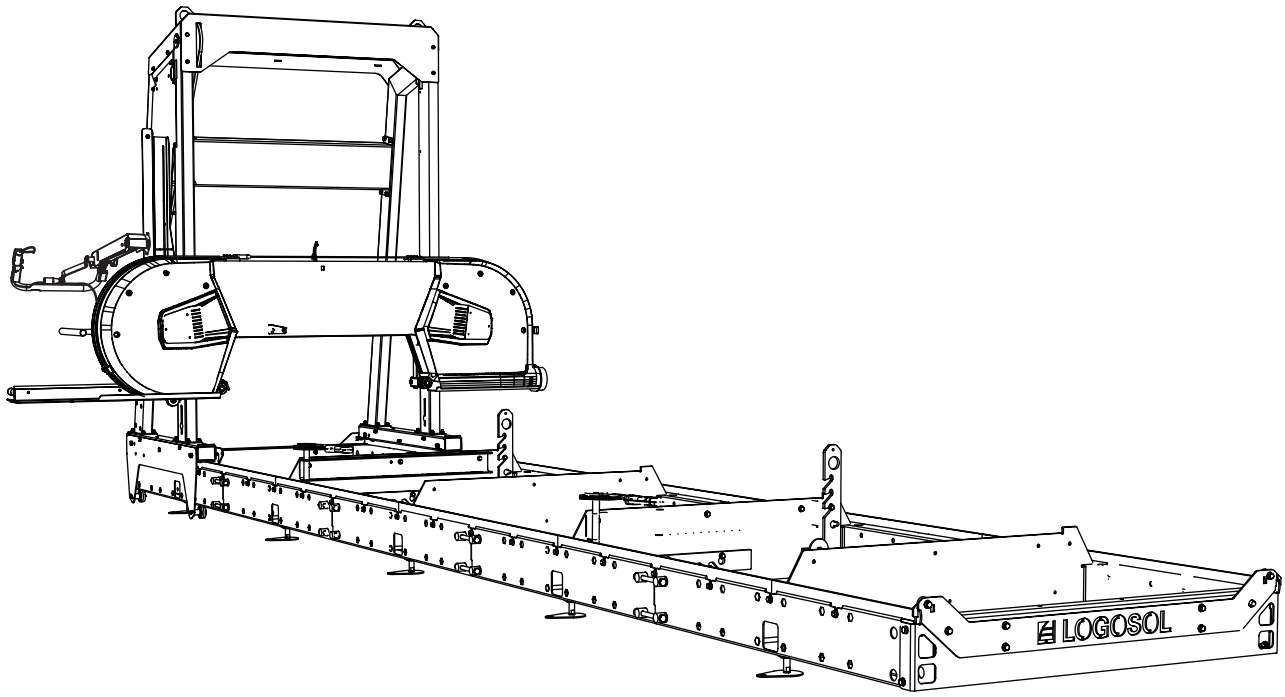

LOGOSOL B1001

Read through the user manual carefully and make sure you understand its contents before you use the machine.

This user manual contains important safety instructions.

WARNING! Incorrect use can result in serious or fatal injuries to the operator or others.

This product consists of several accessories, each with its own manual. Read these manuals before starting assembly to understand the contents, functions, and settings.

EN

LOGOSOL

THANK YOU FOR CHOOSING A LOGOSOL MACHINE!

We are very pleased that you have demonstrated your confidence in us by purchasing this sawmill, and we will do our utmost to meet your expectations.

Logosol has been manufacturing sawmills since 1989. In that time we have supplied approximately 50,000 machines to satisfied customers the world over.

We care about your safety as well as we want you to achieve the best possible results with your sawmill. We therefore recommend that you take the time to carefully read this user manual from cover to cover in peace and quiet before you begin using the saw. Remember that the machine itself is just part of the value of the product. Much of the value is also to be found in the expertise we pass on to you in the user manuals. It would be a pity if that were not utilised.

We hope you get a lot of satisfaction from the use of your new machine.

Bengt-Olov Byström
Founder,
Logosol in Härnösand, Sweden

LOGOSOL continuously develops its products.
For this reason, we must reserve the right to modify
the configuration and design of our products.
Document: LOGOSOL B1001 User Manual
Ref. No. User Manual, English: 0458-395-5301
Text: Mattias Byström, Robert Berglund, Martin Söderberg, Jonas Högberg
Illustrations: Mattias Byström, Martin Söderberg, Robert Berglund, Anna Fossane
© 2026 LOGOSOL, Härnösand Sweden

#10

TABLE OF CONTENTS

General information	4
Description of the band sawmill	5
Safety instructions	6
Technical data	8
Components	10
Assembly of rail frame	12
Adjusting the rail frame	18
Installing the sawhead on the rail frame	19
Installing the handle: see the separate user manual	21
Installation of the motor: see separate instructions	22
Order of adjustments	23
Other adjustments	29
The functions of the sawmill	32
Wiring diagram	34
Using the band sawmill	35
Sawdust management	37
Start & stop instructions	38
Operation instructions	39
Maintenance	44
Troubleshooting	47
CE / UKCA Declaration of conformity	48

GENERAL INFORMATION

This user manual, the instructions of the motor, the assembly instructions of the band sawmill and instructions for accessories should be seen as integral parts of the band sawmill and should always be kept together with it. They should also follow the band sawmill if it is sold.

Responsibility for the band sawmill being correctly assembled and put into operation, and being used in a safe way, lies solely with the person(s) who assembles and uses the band sawmill.

DESCRIPTION OF THE BAND SAWMILL

B1001

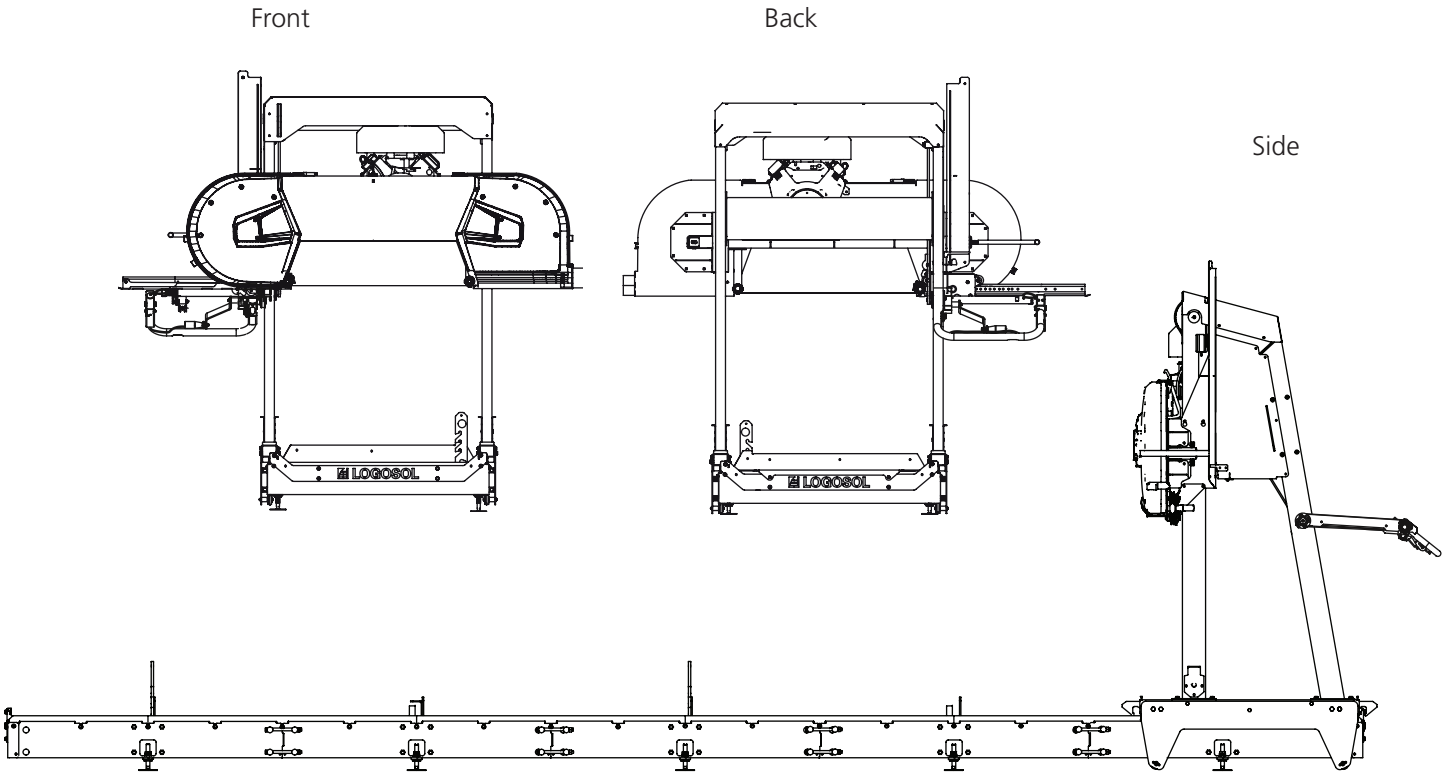

DESCRIPTION OF THE BAND SAWMILL

LOGOSOL B1001

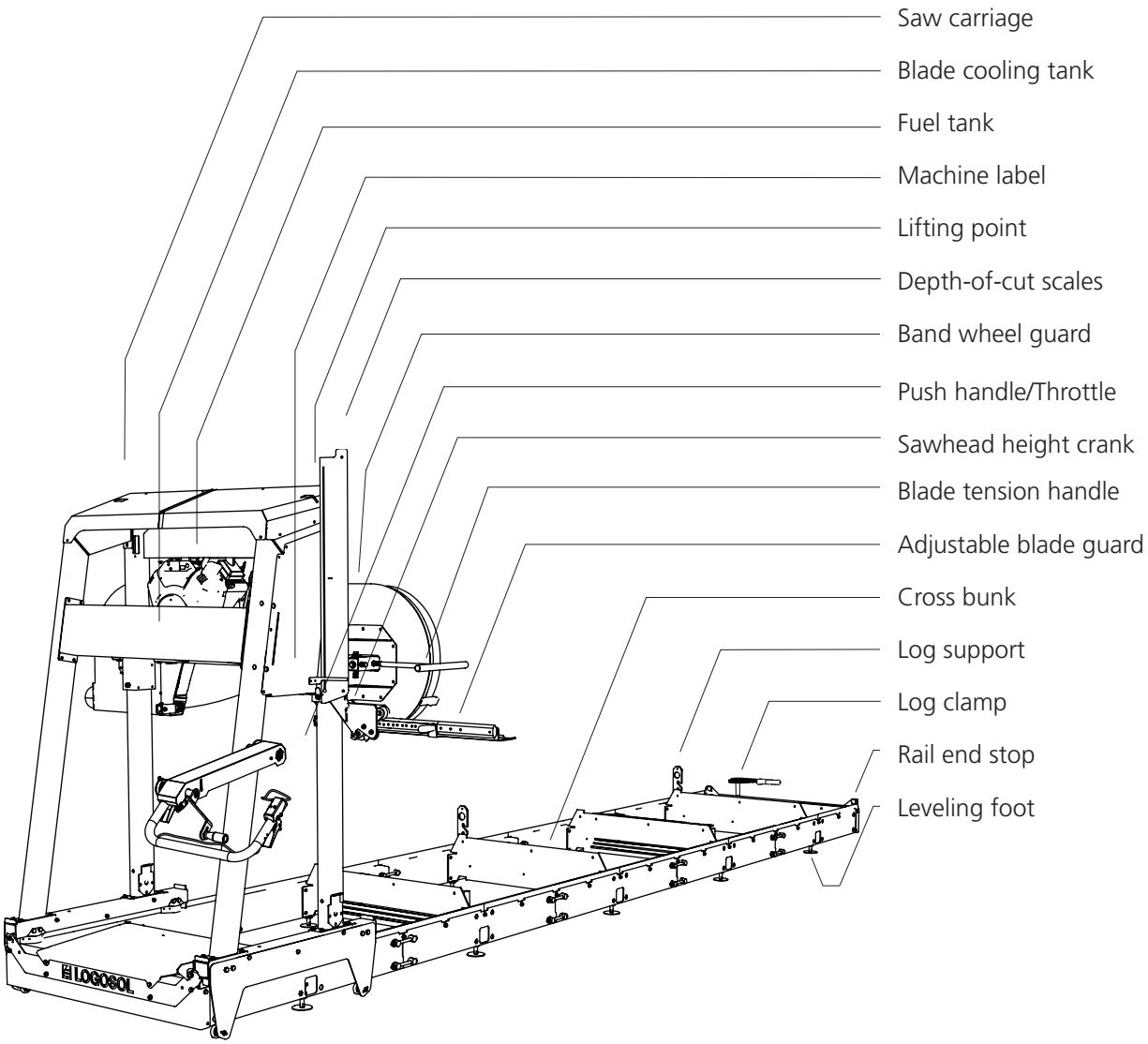

SAFETY INSTRUCTIONS

KEY TO SYMBOLS

WARNING! This symbol means that you should pay particular attention and is always followed by information about the relevant risk.

This symbol is followed by important information or instructions. Pay particular attention when this symbol appears in the manual text.

For your own safety and the safety of others, do not operate the band sawmill or handle band blades without first having read and understood all the contents of this user manual.

WARNING! Cutting tools: Incorrect use can lead to life-threatening injuries. Band blades are extremely sharp and dangerous.

Always use protective gloves (class 1) when working with the band sawmill or handling band blades. Risk of lacerations when handling band blades and some of the plates. Band blades and motor parts may be hot after sawing.

Always use approved hearing protection when working with the machine. Even short exposure to high frequency noise can damage your hearing. Always use closefitting safety goggles when working with the machine or handling band blades. Under certain circumstances the use of respiration protection may be necessary. This would mainly apply if you are sawing dry wood or sawing indoors.

Always wear approved protective footwear with saw protection, steel toe-caps and nonslip soles when working with the machine or handling band blades.

Always wear full-length protective trousers when working with the machine or handling band blades. Never wear loose-fitting clothing, scarves, neck chains, etc., that can get caught in the machine during operation. Secure loose hair before working with the band sawmill.

SAFETY INSTRUCTIONS

THE SAFETY EQUIPMENT OF THE BAND SAWMILL

WARNING! Never use the machine if the safety equipment is defective.

The safety equipment must be checked and maintained.

Here is a description of the safety features of the band sawmill together with their functions.

Interlock safety switch on the band wheel guard
One of the hinges of the band wheel guards is equipped with an interlock safety switch. The machine can not be used without having these guards closed.

Rail end stops
Mechanical stops that prevent the saw carriage from rolling off at the end of the rails.

OPERATOR

WARNING! Whenever the machine is used, approved personal protective equipment must always be used.

Persons under the age of 18 may not work with the band sawmill or handle band blades.

Never work with the machine or handle band blades if you are tired, if you have consumed alcohol or if you are taking medication that can impair your vision, judgement, reaction times, mobility, alertness or otherwise cause negative side effects.

THE WORKSITE

WARNING! Never operate a band sawmill with a petrol-powered engine in enclosed or poorly ventilated areas. This can result in death due to suffocation or carbon monoxide poisoning.

Only operate the band sawmill and handle band blades in full daylight or under adequate lighting.

Keep the work area free from clutter, pets, children, obstacles or other things that can distract the operator.

Choose a worksite where the ground is hardpacked and level, with plenty of space for the band sawmill, a pile of logs and sawn timber. If possible, place the band sawmill so that the sawdust blows away from the operator. Set up the band sawmill on level ground with at least 5 m of free space without any obstacles around the equipment. If the band sawmill is to be set up permanently, we recommend that you support the rail frame with concrete plinths or wooden blocks (15 cm x 15 cm) under each cross bunk.

Always keep a hand-held, ABC type (min. 6 kg) fire extinguisher readily accessible at the worksite.

Always keep a fully-stocked first-aid kit easily accessible at the worksite.

LOGOSOL

TECHNICAL DATA

LOGOSOL B1001	
RAILS/BED	
Length of rails, standard	5.85m
Length of rail extension	1156 mm
Track width	1100 mm
Total width	1170 mm
Height	240 mm
Weight (5.85 m rails)	250 kg
SAW CARRIAGE	
Length	1100 mm
Width	2250 mm
Height	1980 mm
Weight	210 kg
Volume of water tank	17.75 litres
Feed rate	Manual
CAPACITY	
Max. log diameter	1001 mm
Max. sawing width	850 mm
Effective sawing length (standard)	4.85 m
BAND BLADE	
Type and size	4310x33 pitch 22 mm
Band wheel diameter	500 mm
Band wheel rotation speed	1000 rpm
Blade speed	30 m/s
SAWMILL MOTORS	
Electric motor	12 kW, 400 V (weight: 65 kg)
Petrol engine	Briggs & Stratton 23 hp (weight: 35 kg)
Volume of fuel tank	5 litres
SOUND LEVELS/VIBRATIONS	
Equivalent sound pressure level in the operator's area 1)	88.4 dB(A)
Sound power level (estimated) 2)	109.4 dB(A)
Vibration level in handle 3)	<2.5 m/s^2

1) The typical distribution measurement for equivalent sound pressure level is a standard deviation of 2 dB(A).

2) The typical distribution measurement for sound power level is a standard deviation of 3 db(A).

3) The typical distribution measurement for the vibration level in the handles is 1 m/s^2.

BOLTS & NUTS

Definition of fasteners on following pages.

Shoulder bolt

Phillips bolt

Slotted bolt

Set screw

Hex nut

Flange nut

Flat washer

Allen bolt

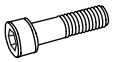
Partial thread Allen bolt

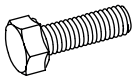
Hex bolt

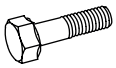
Partial thread hex bolt

Flange bolt

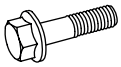
Partial thread flange bolt

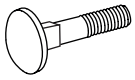
Carriage bolt

ADDITIONAL SYMBOLS

The following symbols are used as supplements to the symbols above to describe the design or function of the fasteners.

Low

Tensilock

Lock

Countersunk

Dome

DIAMETER & LENGTH

The size of a fastener is written as a diameter measurement **(M)** ISO 68-1. For bolts, this is followed by a length measurement. The length of the bolt is measured from below the head to the tip of the bolt.

(Diameter)		**(Length)**
M8	x	20

When this symbol appears during assembly, parts must be lubricated before installation. Lubricate affected parts with universal grease.

This symbol describes the recommended lifting point for heavy lifts.

This symbol describes the sawing direction and reappears during assembly.

Screw the joint finger-tight.

LOGOSOL

COMPONENTS

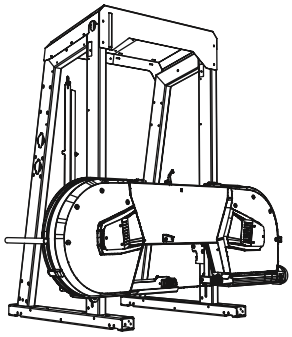

1st — 8500-000-000

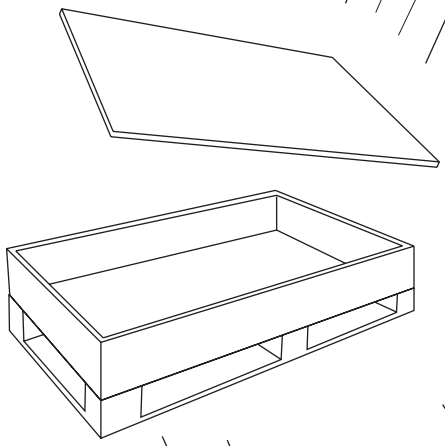

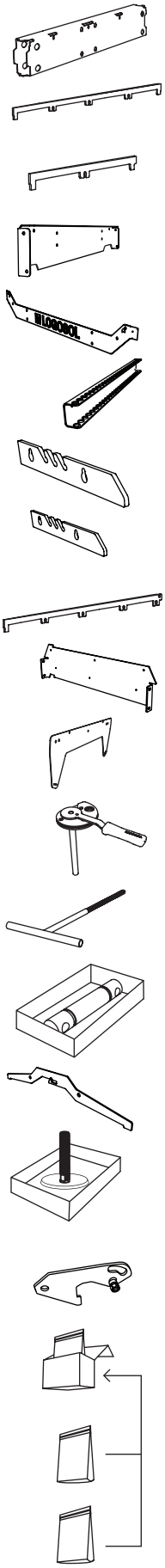

10 x	03-01971
14 x	03-01973
4 x	03-01972
2 x	03-01857
2 x	03-02093
2 x	03-02008
2 x	03-01983
2 x	03-01448
4 x	03-02180
4 x	03-01976
2 x	03-01977
2 x	8210-001-0020
1 x	02-00247
1 x	8300-005-0150
1 x	03-03054
1 x	8300-005-0100
2 x	03-01880
1 x	8300-005-0005
1 x	8200-005-0200
1 x	8300-005-0300

COMPONENTS

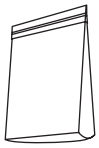

8300-005-0010

58 x – M8x16

58 x – M8

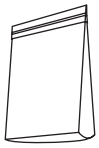

8300-005-0020

4 x – M8x25

4 x – M8x12

10 x – M8x20

8 x – M8

2 x – M8

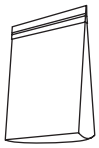

8300-005-0030

20 x – M16

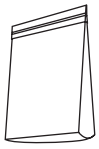

8300-005-0040

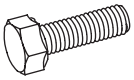

16 x – M12x90

16 x – M12

16 x – M12

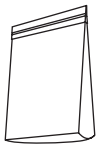

8300-005-0050

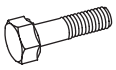

32 x – M12x140

32 x – M12

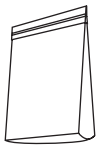

8300-005-0060

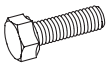

4 x – M6x65

4 x – M6

4 x – M6

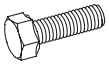

6 x – M8x95

6 x – M8

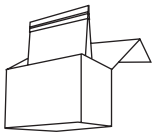

1x 8300-005-0005

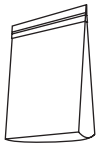

8200-005-0200

6x 9291-020-0005

2 x 03-01464

4 x 9026-015-0002

2 x 03-01465

4 x 9029-011-0001

4 x 03-01982

1 x 03-01772

1 x 03-01773

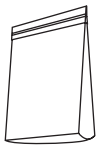

8300-005-0300

4 x 03-02181

10 x 03-02007

4 x 03-01905

10 x 9034-011-0002

ASSEMBLY OF RAIL FRAME

Start assembling the sawmill by mounting the rails. The sections of rail are place under the saw head in the pallet. Assembly involves heavy lifting and it requires two people to help with the work.

WARNING! Heavy lifting! Risk of injury.

Two people should always help with heavy lifting.

WARNING! Risk of crush injuries.

Always wear protective gloves and handle the motor carefully when placed on the motor shelf.

EXTRA EQUIPMENT:

There are accessories for this machine that may affect the sequence of assembly in this manual. Read through the assembly instructions in the various manuals before starting work to get an overview of the different procedures.

Follow the steps of assembly carefully and use an ergonomically correct work position while working. Work on level ground, as this will facilitate when adjusting the rails.

Read all the assembly instructions before beginning the assembly, and then follow the step-by-step instructions during the assembly.

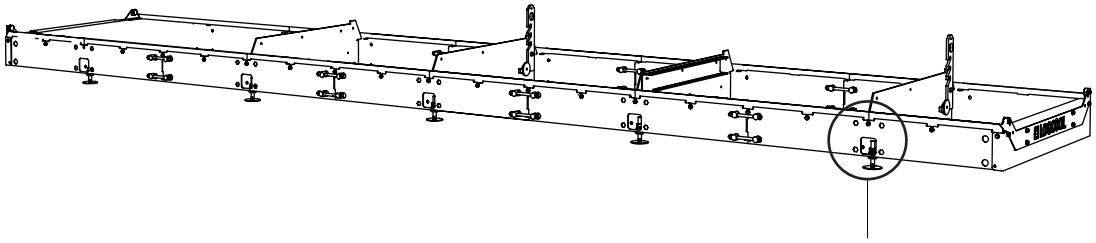

1

When installing trailer kits and accessories that require fixed support legs: skip step 1 (see manual for the product in question).

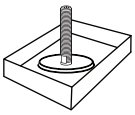

8300-005-0100

10 x

8300-005-0030

8300-005-0300

10 x

20 x – M16

20 x

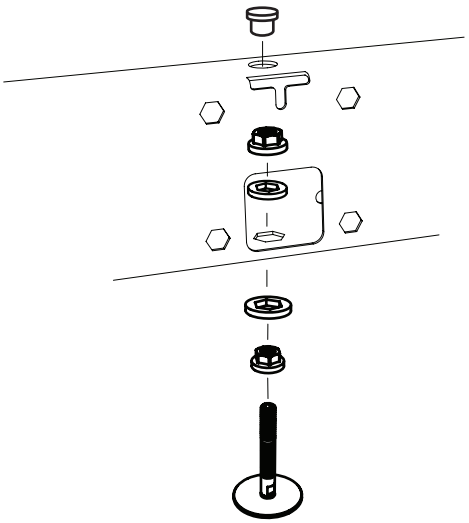

2

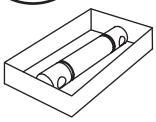

8300-005-0150

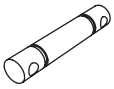

4 x

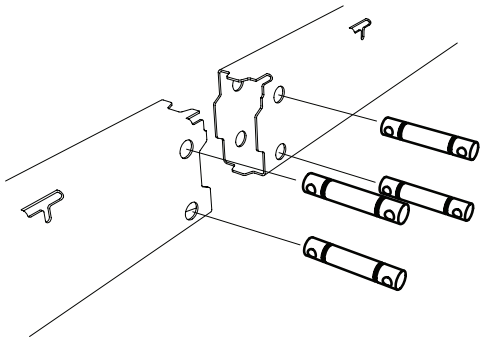

3

8300-005-0050

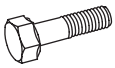

4 x – M12x140

4 x – M12

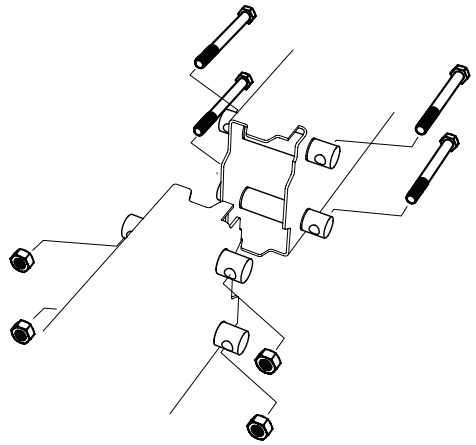

4

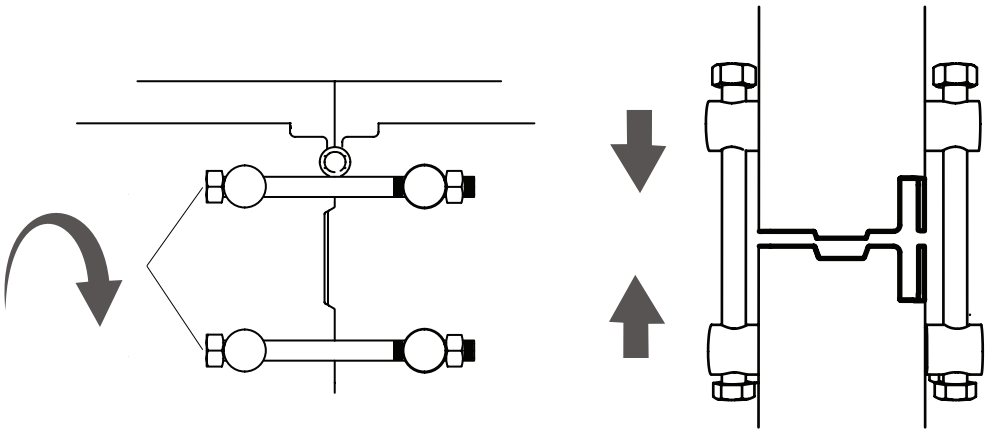

5

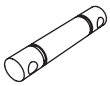

12 x

8300-005-0050

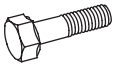

12 x – M12x140

12 x – M12

Now repeat steps 2–5 for the other rail.

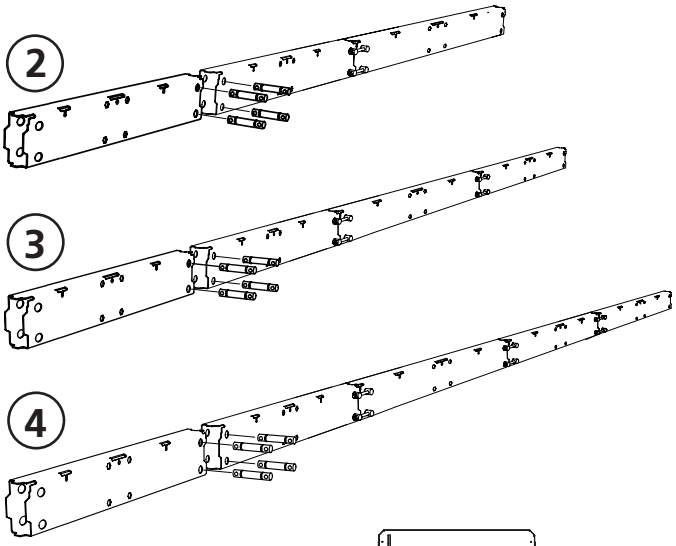

6

If the machine is to be equipped with hydraulics, these two cross bunks should not be installed at this point of assembly.

8300-005-0040

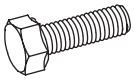

16 x – M12x90

16 x – M12

16 x – M12

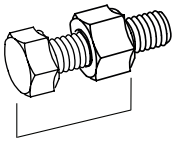

78,5mm

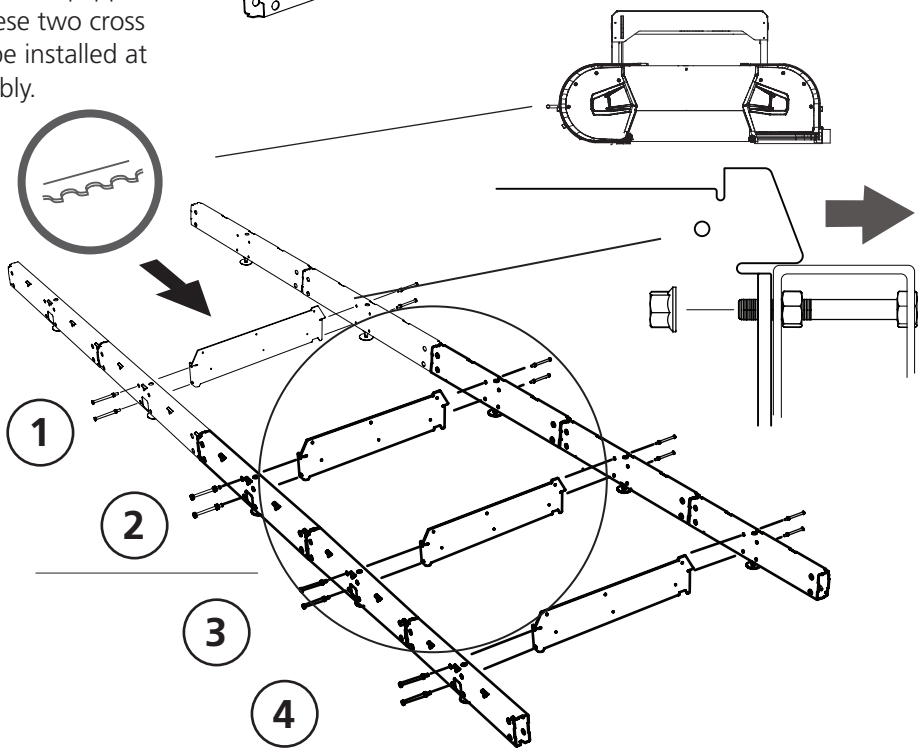

7

8300-005-0010

4 x – M8x16

4 x – M8

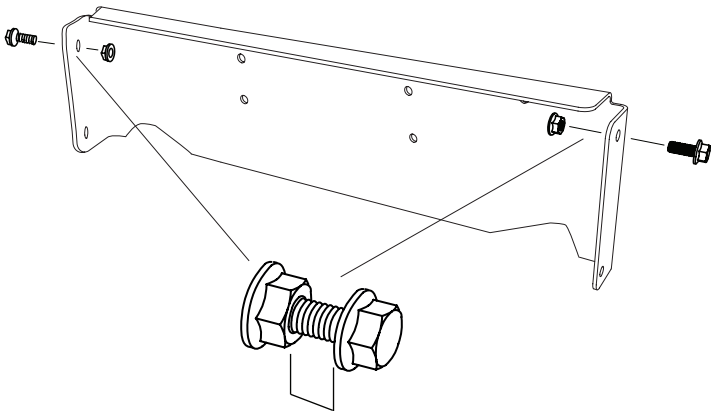

8

8300-005-0010

4 x – M8x16

4 x – M8

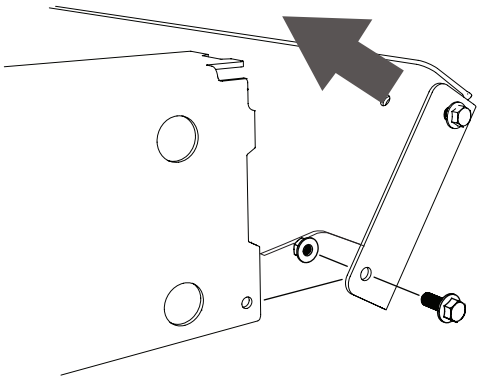

9

8300-005-0010

38 x – M8x16

38 x – M8

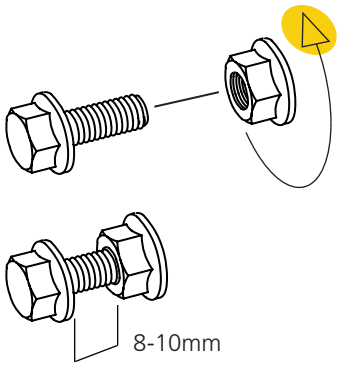

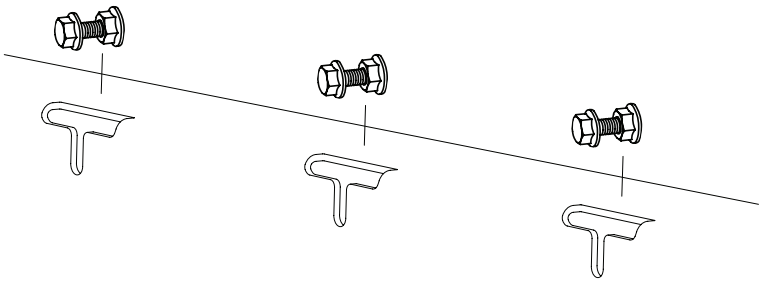

LOGOSOL

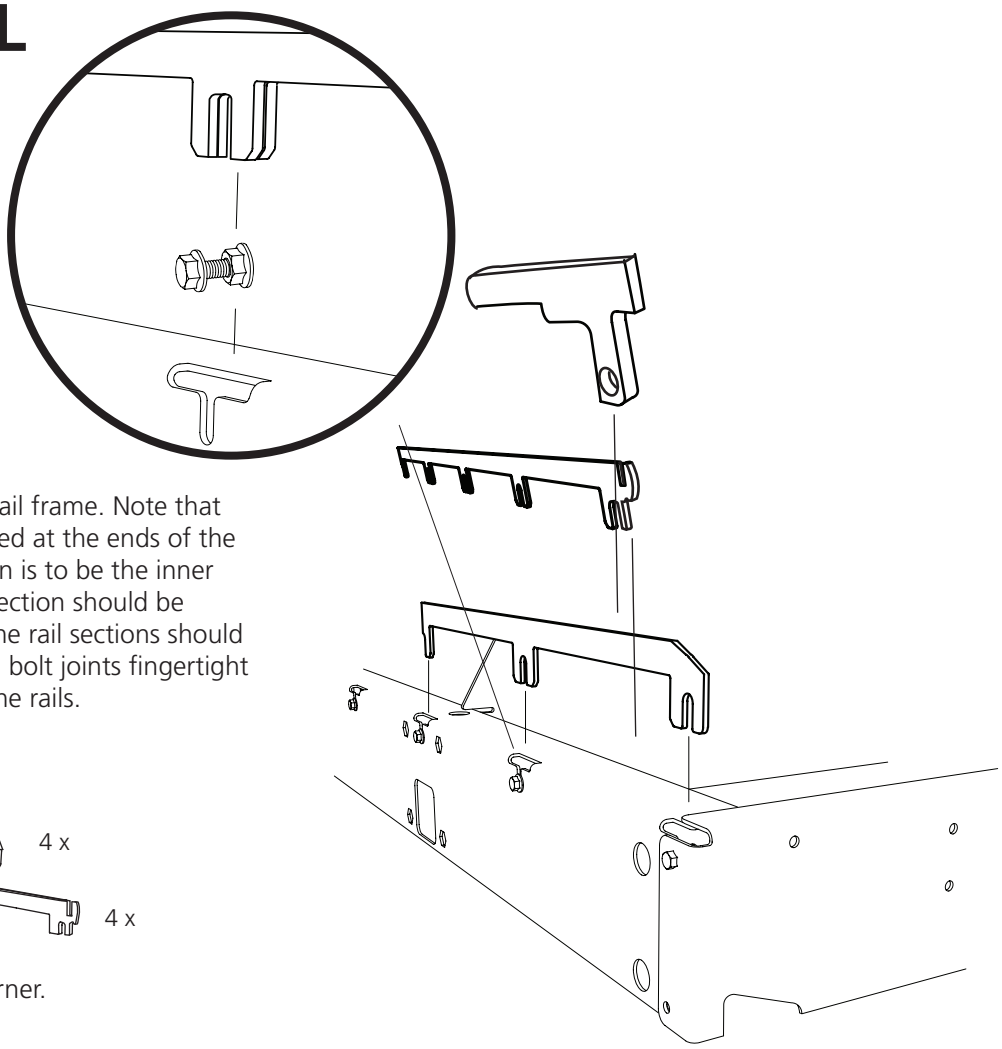

10

Fit the first rail sections to the rail frame. Note that the short sections should be used at the ends of the rail frame. The first short section is to be the inner rail section, and the first long section should be installed on the outside of it. The rail sections should overlap each other. Tighten the bolt joints fingertight before the final adjustmen of the rails.

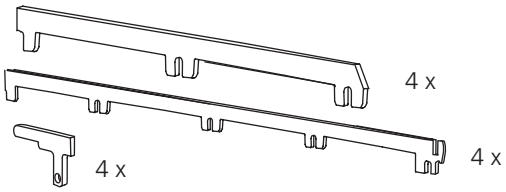

Repeat this process on each corner.

11

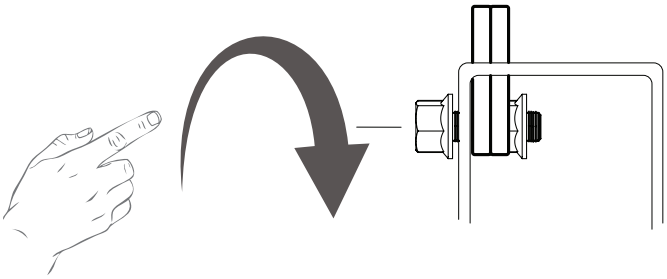

The rail sections should be fitted so that they overlap each other. They are then secured with the bolt joints in every rail attachment hole in the rail frame as shown in the illustration. Then, repeat the installation on the other side of the rail frame. The last short rail section should be fitted the same way as the first one. See step 10 above.

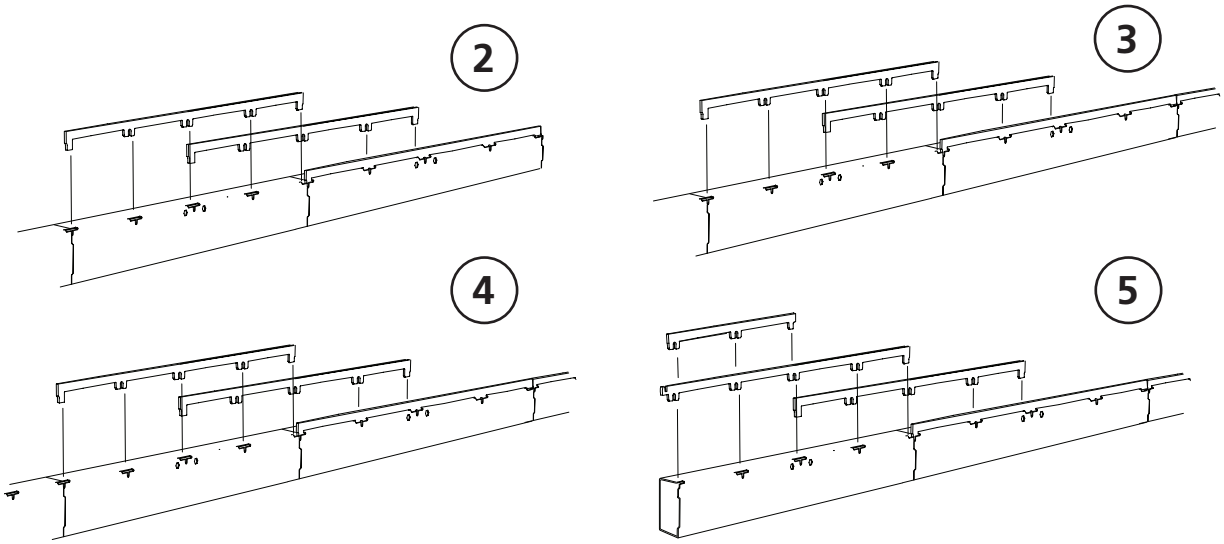

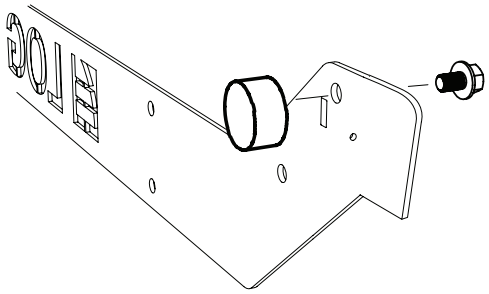

12

8300-005-0020
8200-005-0200

4 x – M8x12

4 x

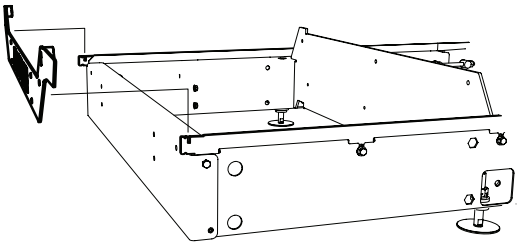

13

8300-005-0010

12 x – M8x16

12 x – M8

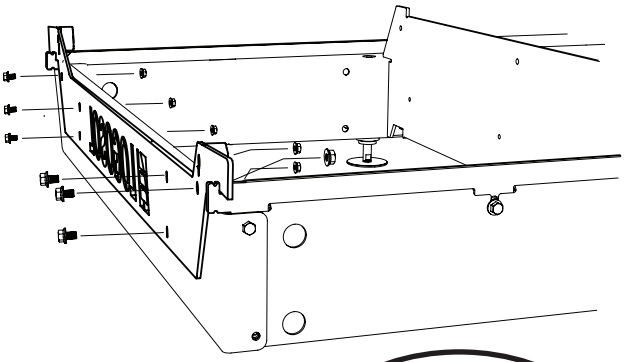

14

8300-005-0020

6 x – M8x20

6 x – M8

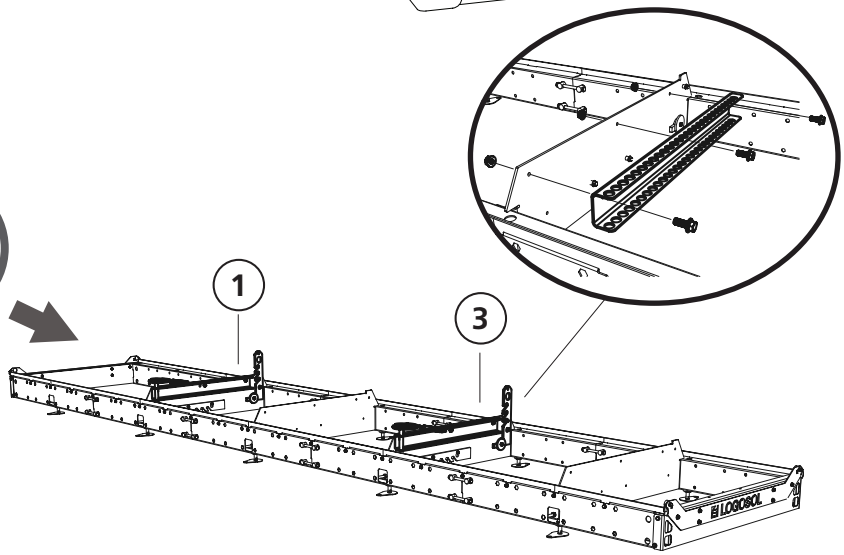

15

8300-005-0020
8200-005-0200

4 x – M8x25

4 x – M8x20

2 x – M8

2 x – BRB M8

2 x

2 x

6 x

2 x

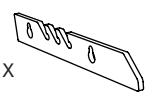

2 x

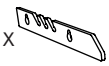

2 x

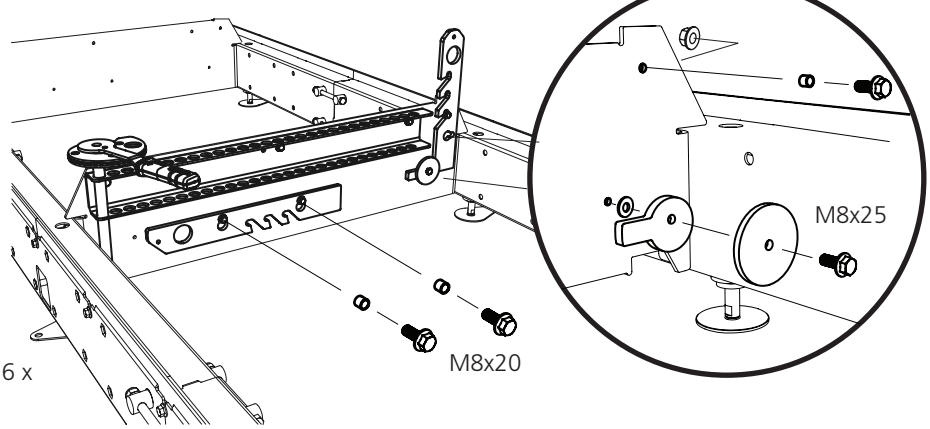

ADJUSTING THE RAIL FRAME

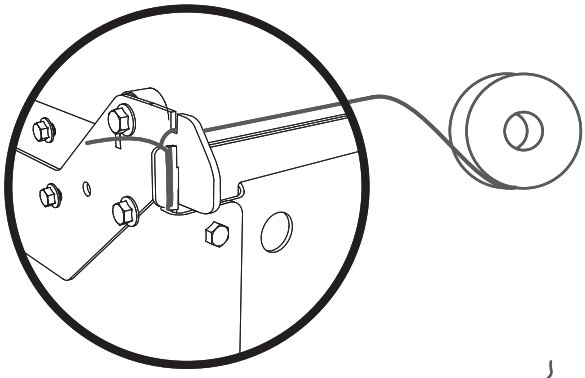

Measure along a string to check that the distance between the string and the rail is the same along the whole rail. To adjust the levelness of the rail, move the rail sections up or down at the points where the rail is not level.

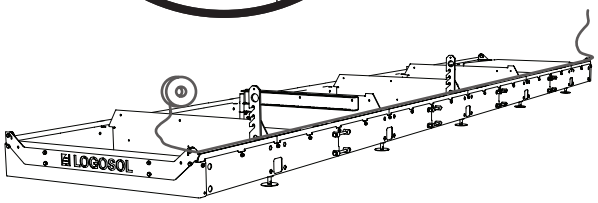

Tip: Use shims under the rail sections, so that they stay in the right position while you are tightening the bolts.

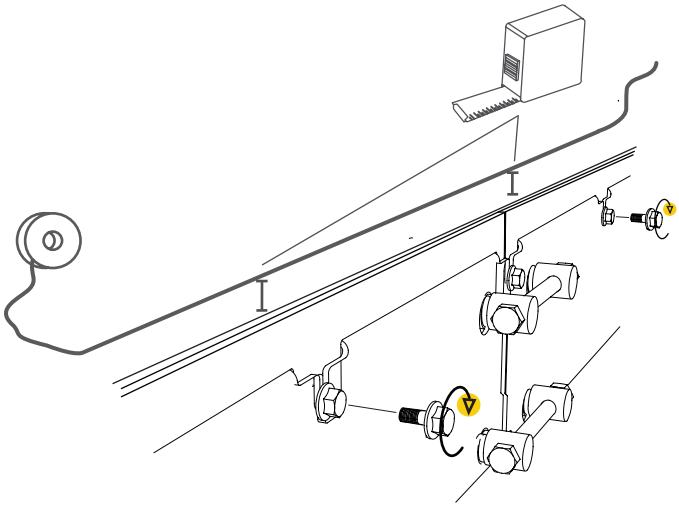

Important!

This step is crucial for the precision of the sawmill. Be careful and put some extra time into this step.

When the rail is adjusted level, check that all the rail sections are level at the joints and that the inner and outer rail sections are at the same height. All joints should be as level as possible. Adjust and tighten the bolting step by step. When one side of the rail frame is adjusted along its whole length and the joints are level, tighten all boltings on this side of the bed. Then, repeat all the adjustment steps on the opposite side of the rail frame to complete the adjustment.

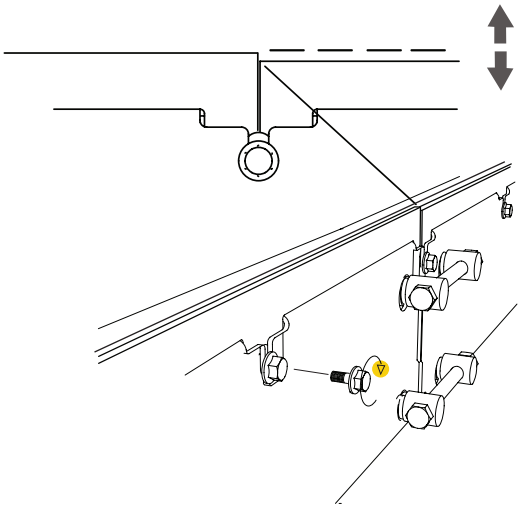

Support legs

If the machine is equipped with support legs, they must be fitted before starting the next step.

INSTALLING THE SAWHEAD ON THE RAIL FRAME

Lift the sawhead in place on the rails. The total weight of the sawhead is 210 kg. Use an approved lifting sling attached to the sawhead's lifting points, as shown in illustration A or B. Perform the lift with lifting equipment suitable for the situation.

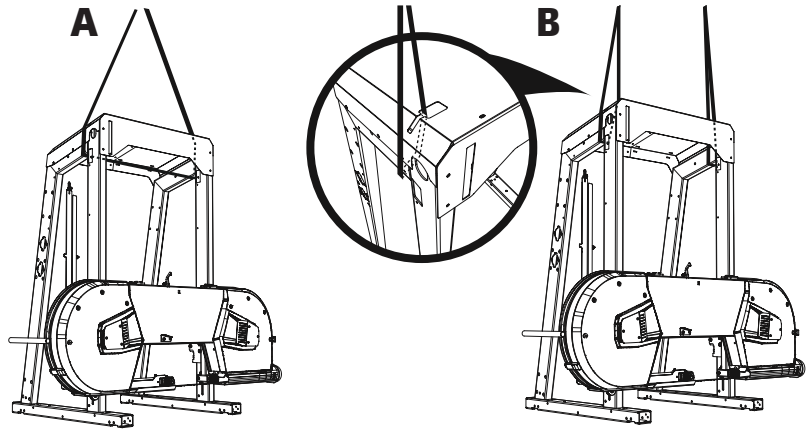

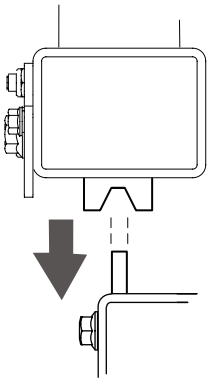

Important!

Make sure that the sawhead frame grips the rails.

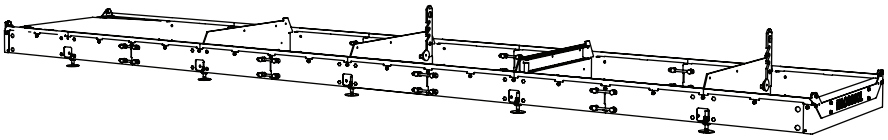

Danger! Risk of tilting.
Critical step of assembly.

When the sawhead is installed onto the rails, the anti-tip wheels must be fitted to the sawhead frame.

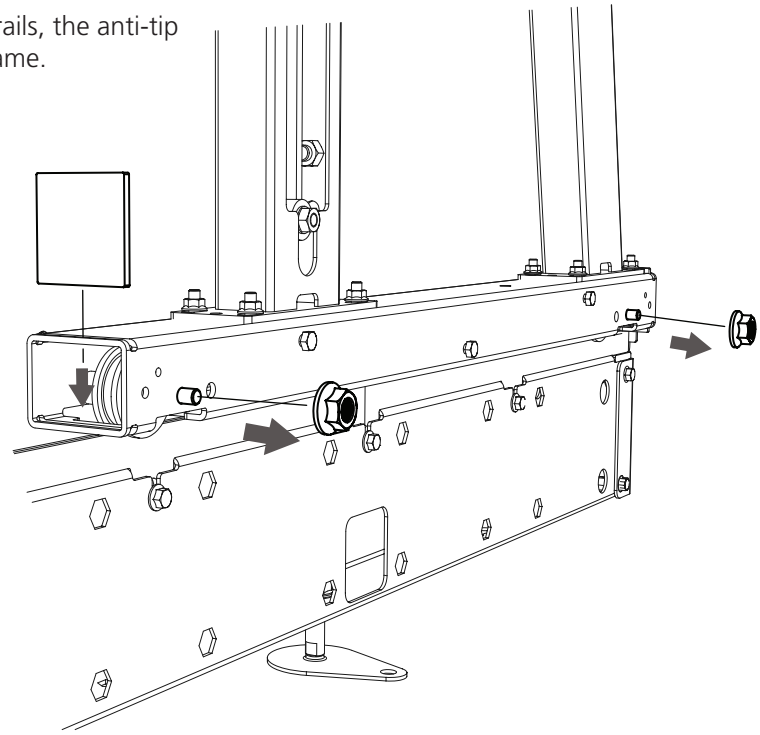

1

Start by removing the flange nuts outside the bogie tube, they will be needed in step 3. Leave the screw in place, it will be needed later during assembly. Install the track sweeper.

2

8300-005-0300
8300-005-0060

2 x

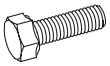

2 x – M6x65

2 x – M6

2 x – M6

2 x

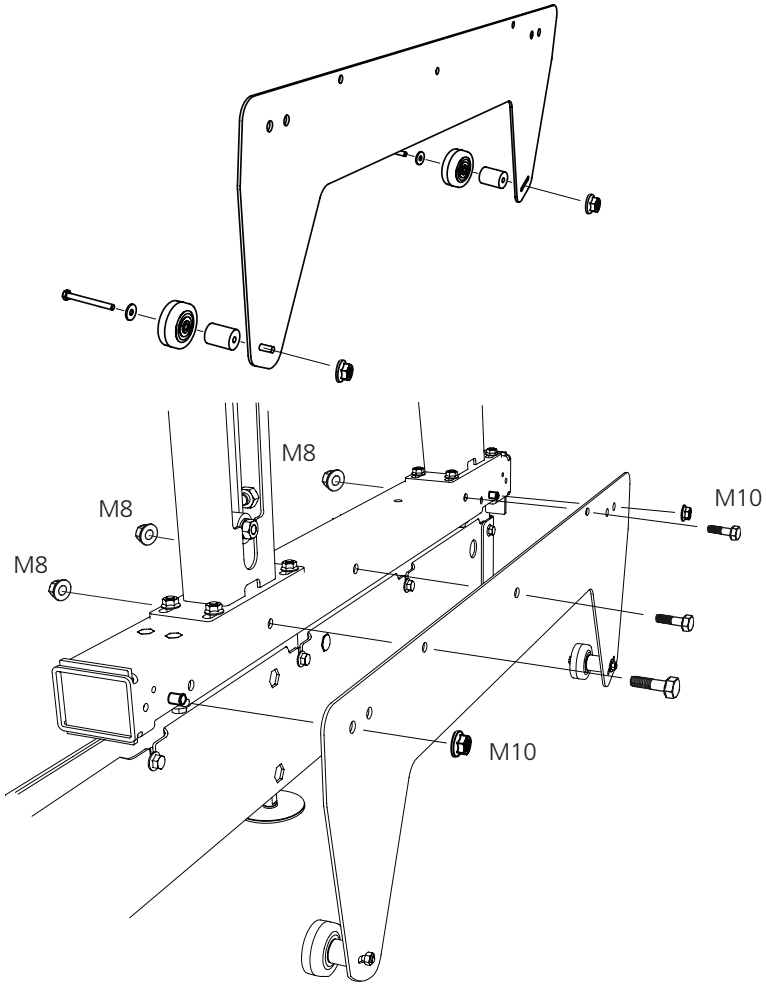

3

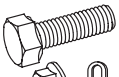

3 x – M8x95

3 x – M8

Use existing nuts from step 1.

2 x – M10

4

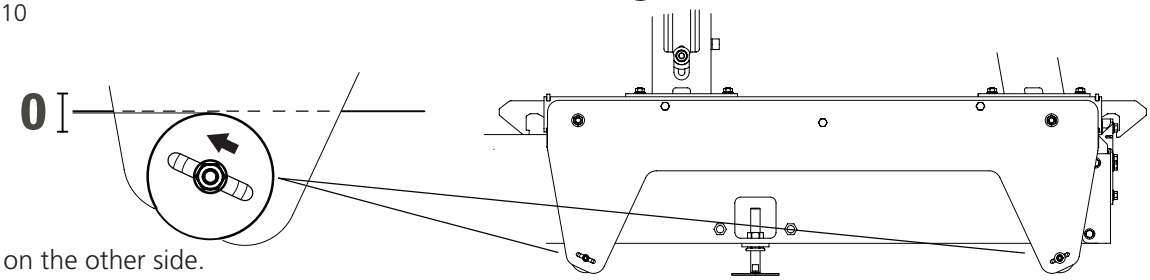

Repeat steps 1-4 on the other side.

5

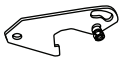

2st — 03-01880

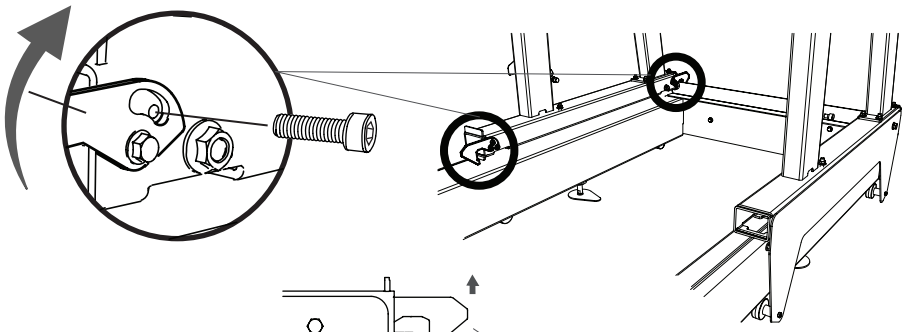

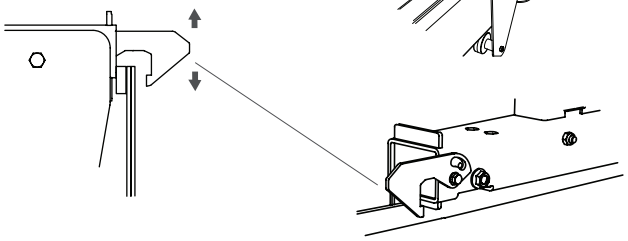

6

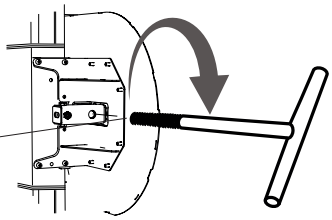

INSTALLING THE HANDLE: SEE THE SEPARATE USER MANUAL

Now it is time to install the handle.
The instructions for installing the handle are provided in a separate attachment; please refer to the instructions for your specific handle. Once installation is complete, proceed to the next step in these instructions.

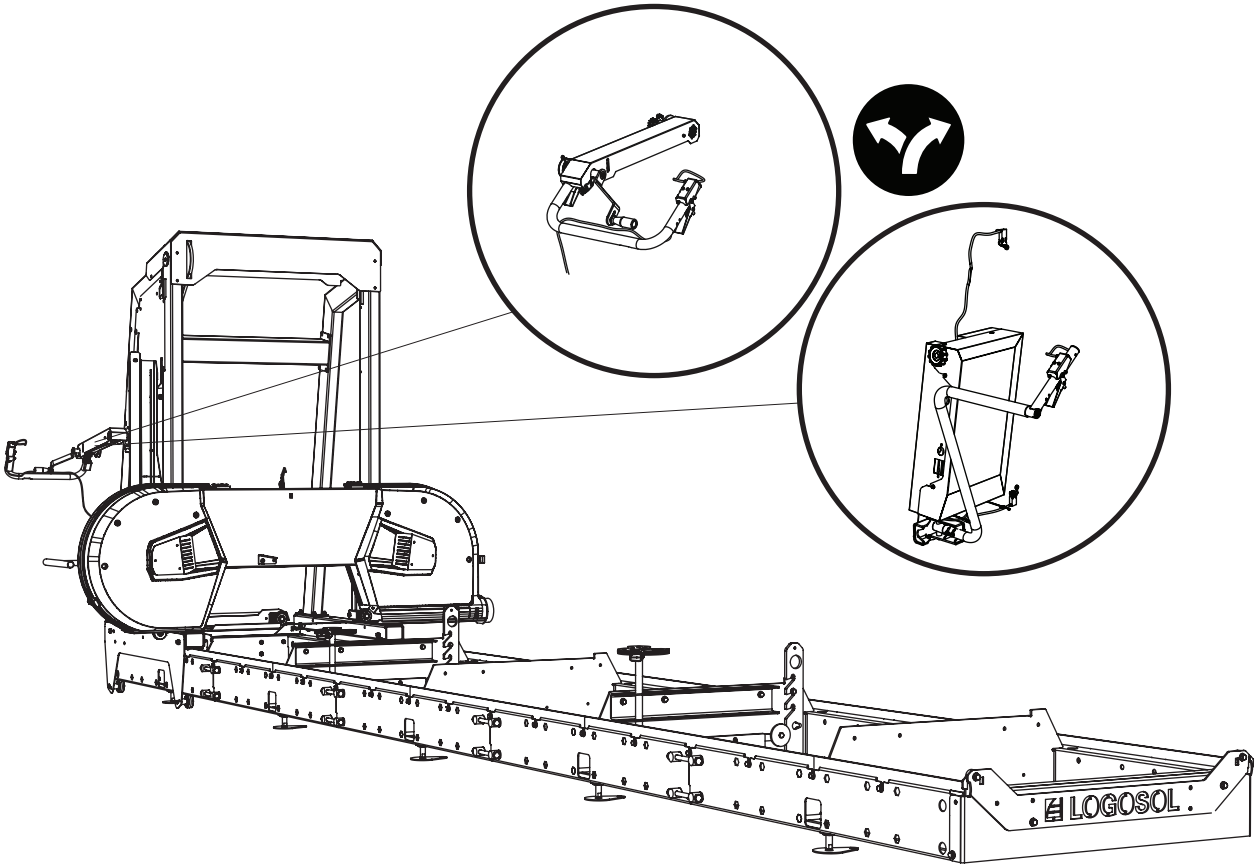

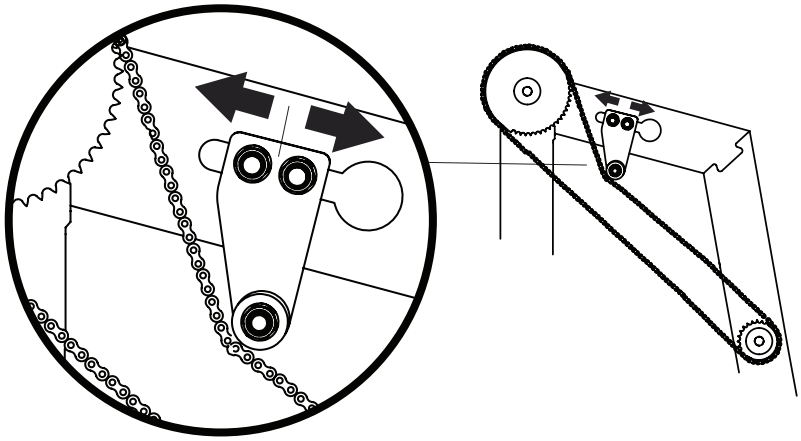

INSTALLATION OF THE MOTOR: SEE THE SEPARATE USER MANUAL

It is now time to fit the engine. The instructions for fitting the engine are supplied in a separate attachment: see the instructions for the engine you will be working with. When assembly is complete, carry on with the section entitled Adjustment sequence on the next page of this user manual to complete the adjustment sequence before starting the machine.

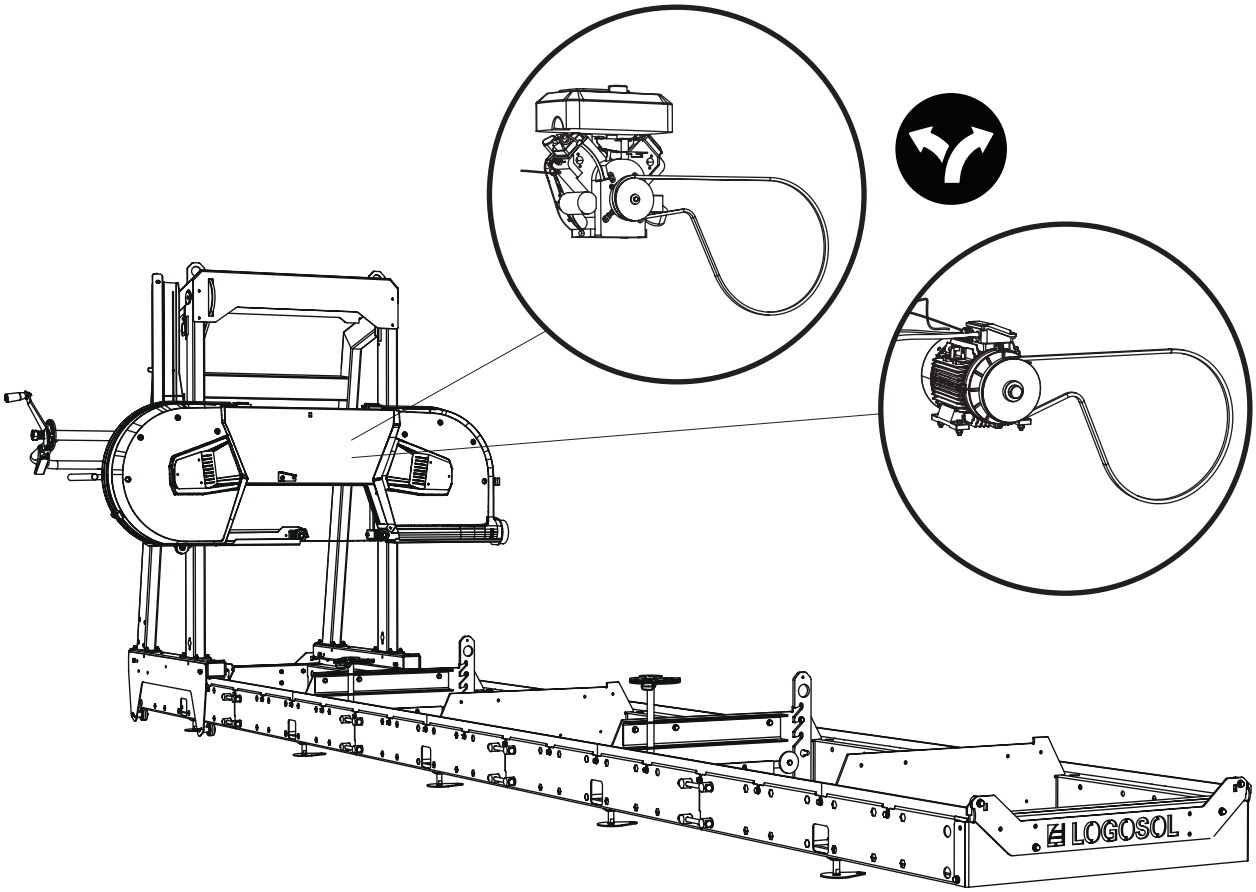

ORDER OF ADJUSTMENTS

Read all the adjustment instructions before beginning adjusting, and then follow the step-by-step instructions while adjusting.

IMPORTANT!

To ensure good operation of the sawmill, it is important that it is correctly adjusted. Some adjustments affect other machine settings. Due to this, it is crucial that you follow the order outlined below.

1. Adjust the levelness of the rail frame
2. Adjust the band wheels
3. The lengthwise position of the blade / Adjust the lengthwise position of the blade
4. Adjust the parallelity between the band blade and the cross bunks
5. Adjust the adjustable blade guide horizontally
6. Adjust the parallelity between the band blade and the rails
7. Tensioning the throttle wire

ORDER OF ADJUSTMENTS

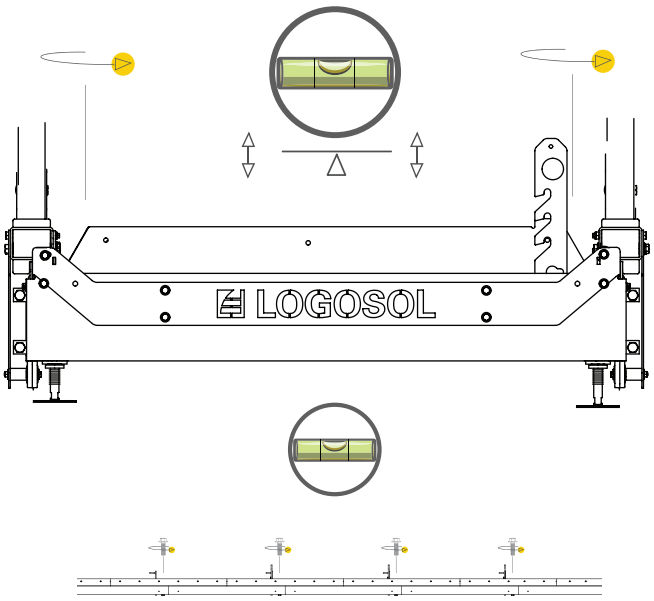

1

ADJUST THE LEVELNESS OF THE RAIL FRAME

To ensure a good sawing result, it is important that the rails are completely level. Earlier, we have adjusted the levelness along the long sides of the rail frame. Now the rail frame is to be adjusted on its short sides. Place a spirit level on a cross bunk and adjust the levelling feet until the rails are on a level. Repeat this procedure on all cross bunks until the rails are on a level along the whole length of the rail frame.

ADJUSTMENT OF THE LEVELLING FEET

Adjust the levelling feet by using an Allen key from above. Once the adjustment is complete, you secure the position of the feet by tightening the counter nut inside the rail frame.

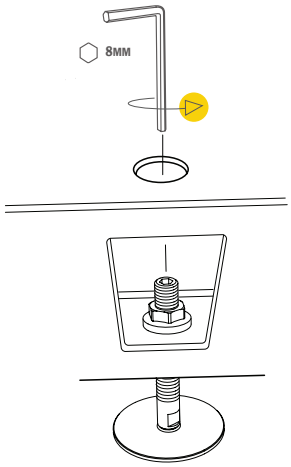

2

ADJUST THE BAND WHEELS

The angle of the band wheels has to be adjusted so that they are at right angles to the cross bunks. With the sawhead in its lowest position, check the perpendicularity between the band wheels and the cross bunks. A good method is to place a set square on a straightedge that rests on two cross bunks. Adjust by first loosening the lock nut and then turning the adjusting screws on the top side of the band wheel shaft mountings until the band wheels and the cross bunks are perpendicular to each other.
Tighten lock nuts and adjusting bolts.

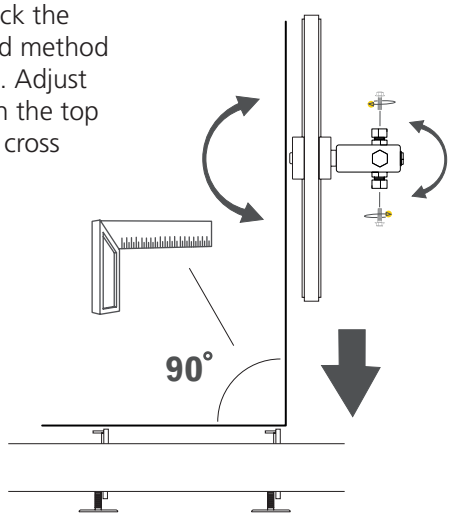

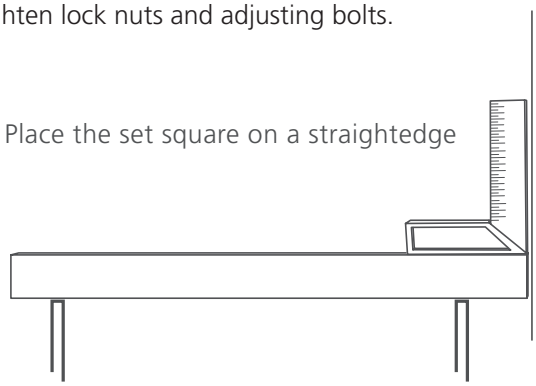

ORDER OF ADJUSTMENTS

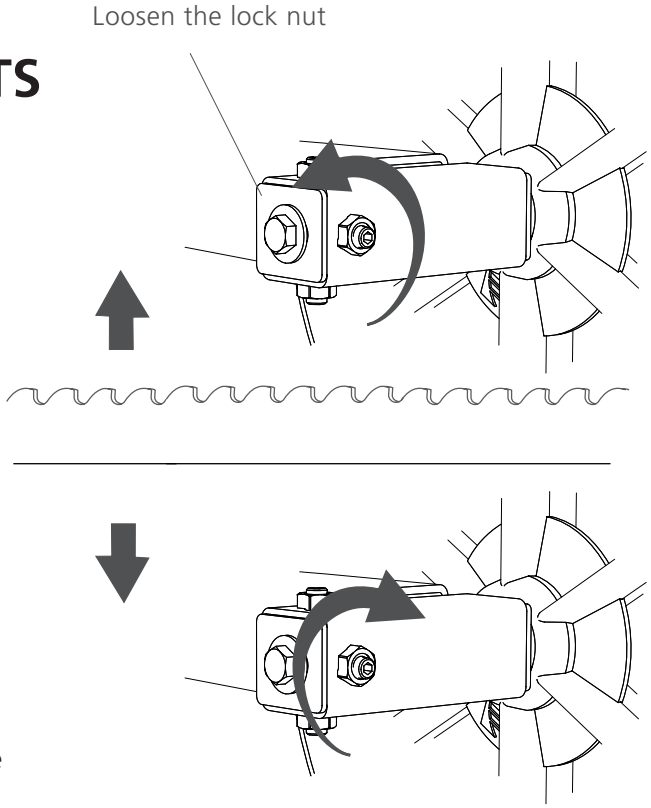

3

ADJUST THE LENGTHWISE POSITION OF THE BLADE

The lengthwise position of the blade is adjusted by the adjusting bolts that is positioned horizontally, i.e. the bolts situated on the outside of the shaft mountings. Before adjusting, the lock nut has to be opened. If the blade moves outwards on the wheels, turn the adjusting bolt clockwise to compensate. If the blade moves inwards, turn the bolt counterclockwise. Adjust in small steps. Tighten all lock nuts and adjusting screws after the adjustment.

TIP! You may need to loosen the adjusting bolts slightly on the top side of the shaft mountings before adjusting the blade.

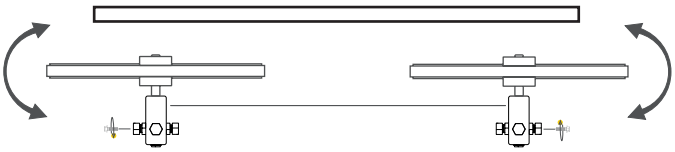

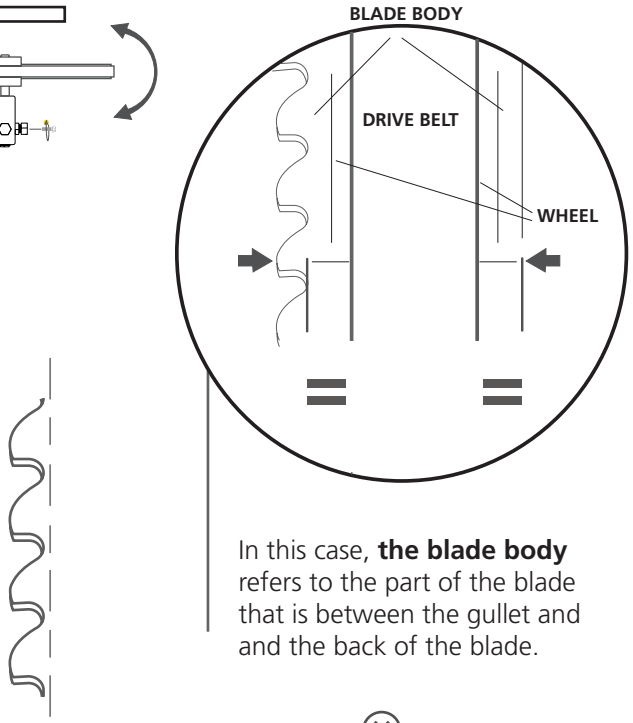

THE LENGTHWISE POSITION OF THE BLADE

The lengthwise position of the blade is crucial to the sawing result. To ensure the best possible sawing result, we recommend that the blade body is positioned centred over the drive belt, which lies in the groove in the wheel.

First, install the blade centred over the drive belt so that blade body protrudes equally on both sides of the drvie belt. Then, tighten the blade. Rotate the wheels manually and check that the lengthwise position of the blade is unchanged. Rotate the wheels at least three turns. If the blade moves outwards or inwards on the wheels, you adjust this as described on the next page. If the blade runs straight on both band wheels, then check that the blade runs in a straigth line between the wheels. You check this by looking along the back edge of the blade viewed from the top of the wheels.

When the blade runs in a straight line, close the wheel guards and start the sawmill. Throttle up to make the wheels spin, then release the throttle. Open the wheel guards and check that the lengthwise position of the blade is unchanged. If this is the case, the blade is adjusted correctly.

In this case, **the blade body** refers to the part of the blade that is between the gullet and and the back of the blade.

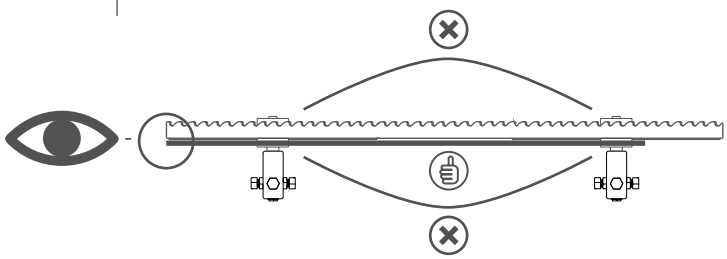

If the blade bends in the direction of the saw teeth, the blade is positioned too far forward on the wheels. If it bends in the other direction, the blade is positioned too far back.

ORDER OF ADJUSTMENTS

4

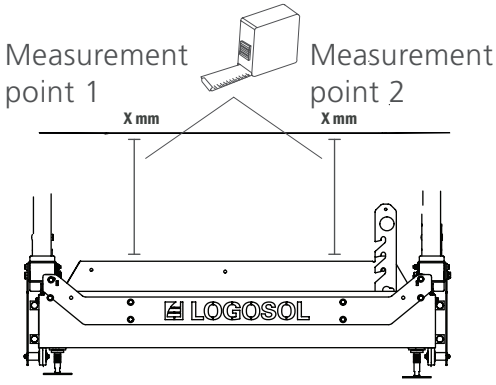

ADJUST THE PARALLELITY BETWEEN THE BAND BLADE AND THE CROSS BUNKS

To ensure a good sawing result, it is important that the band blade is parallel with the cross bunks. Measure the vertical distance between the blade and the cross bunk. Note down the measurements.

When carrying out this adjustment, the blade guide rollers have to be removed.

Adjust the band blade by turning the adjusting bolts on the sawhead until the measurements are the same at both measuring points.

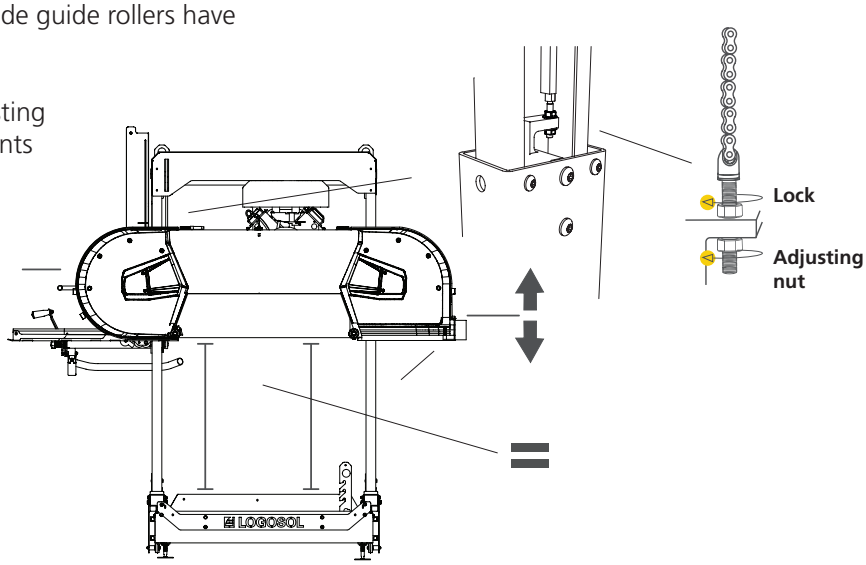

5

ADJUST THE ADJUSTABLE BLADE GUIDE HORIZONTALLY

The adjustable blade guide with guard has to be adjusted to ensure straight cuts in all positions. Install the blade guide rollers. Then, bring the blade guide with guard to its innermost position. Place a spirit level on the blade guide and adjust by turning the eccentric handle until the blade guide with guard is horizontally level. When it is level, use spacers on the fixed blade guide roller until both blade guide rollers have the same distance to the cross bunk.

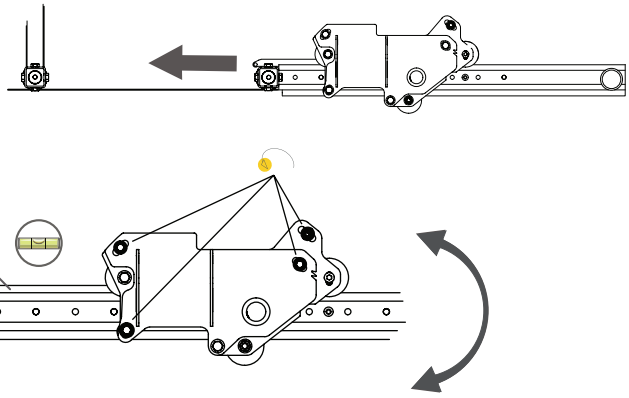

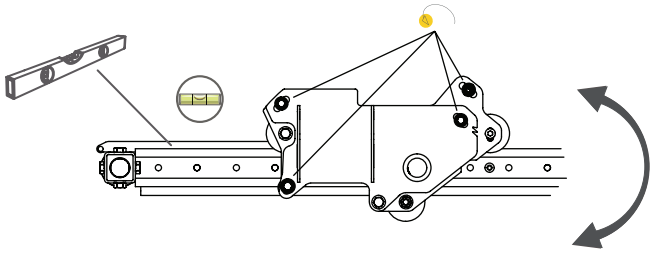

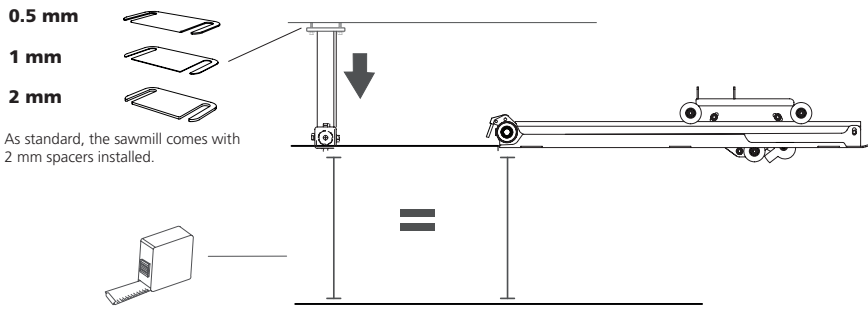

ORDER OF ADJUSTMENTS

TIGHTEN THE BLADE GUIDE ARM

To ensure good operation of the sawmill, it is important that the blade guide arm runs without play in the blade guard holder. Loosen the Allen bolt on the blade guard holder and push the wheel down as in the illustration. Ensure that the blade guide arm is aligned between the wheels and runs without play.

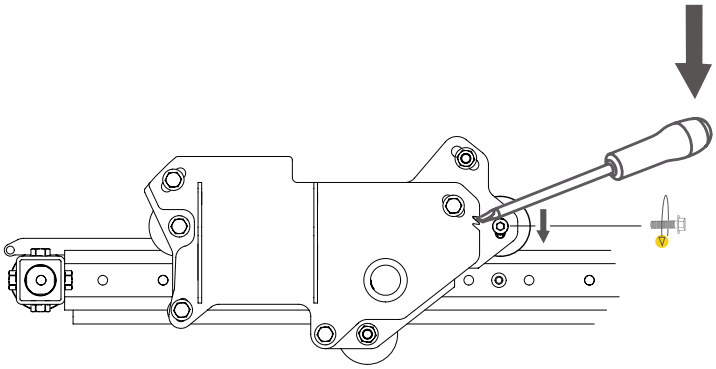

ADJUST THE PARALLELITY BETWEEN THE BLADE GUIDE ARM AND THE BLADE

To adjust the parallelity between the blade guide arm and the band blade, you loosen the three fixing bolts on the outside of the blade guard holder. Then, adjust the parallelity using the adjusting bolt on the rear plate.

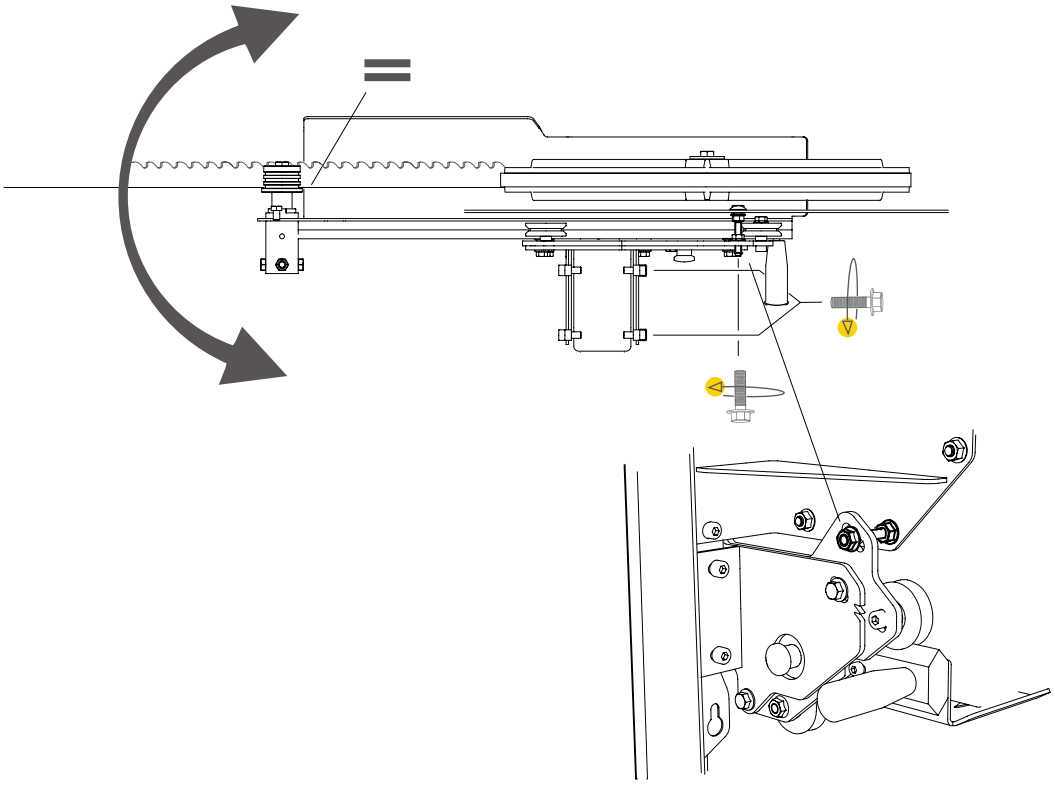

ORDER OF ADJUSTMENTS

6

ADJUST THE PARALLELITY BETWEEN THE BAND BLADE AND THE RAILS

It is important for the saw blade to be parallel to the rail to ensure proper operation of the sawmill.
Place the Blade Align on the saw blade, as close to one of the blade guide rollers as possible.
Place the Blade Align over a tooth with no set.
Now measure from the leading edge of the Blade Align (measurement point 1) vertically down to the log bed. Note down the value from measurement point 1. Move the saw head, then repeat the measurement from the trailing edge of the Blade Align (measurement point 2). Compare the values. The values at measurement point 1 and measurement point 2 must be the same.

If the measurements differ, turn the adjusting bolts on the blade guide until the measurements are the same at both measurment points. One method to facilitate adjusting, is to use the value from measurement point 1, compare it with the value from measurement 2 and then, by raising or lowering the blade guide, adjust half the difference at measurement point 2. When the blade is parallel to the rails, repeat the adjustment steps on the other blade guide roller.

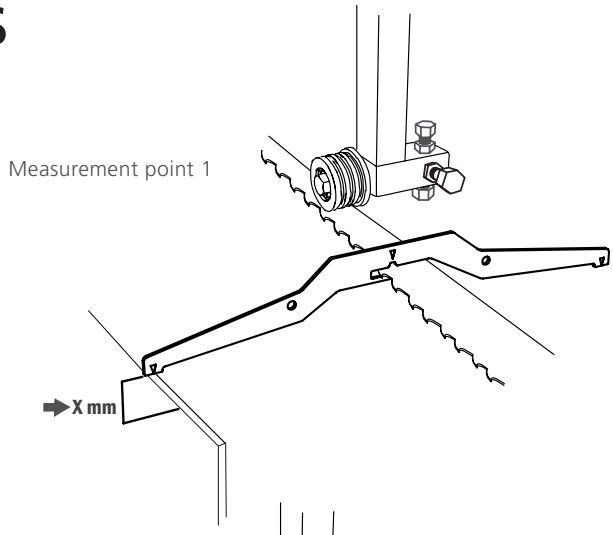

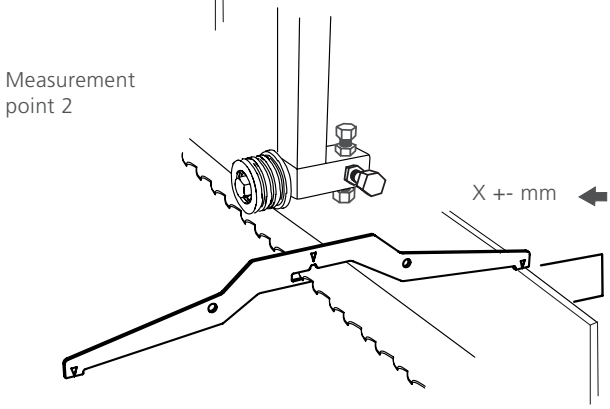

Adjust half the difference at measurement point 2

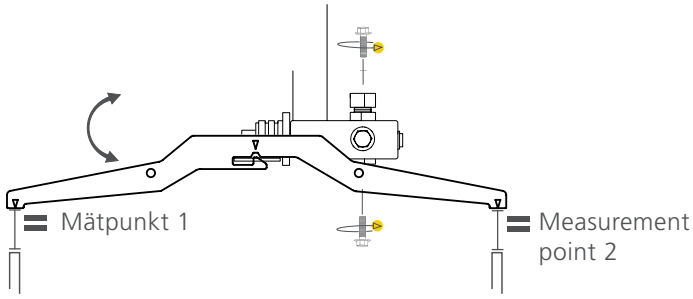

7

TENSIONING THE THROTTLE WIRE

The tension of the throttle wire can be adjusted by turning the adjusting bolt that holds the wire coating. Turn the adjusting bolt until you get full throttle on the engine when the throttle handle is fully pushed in. Then secure with the counter nut.

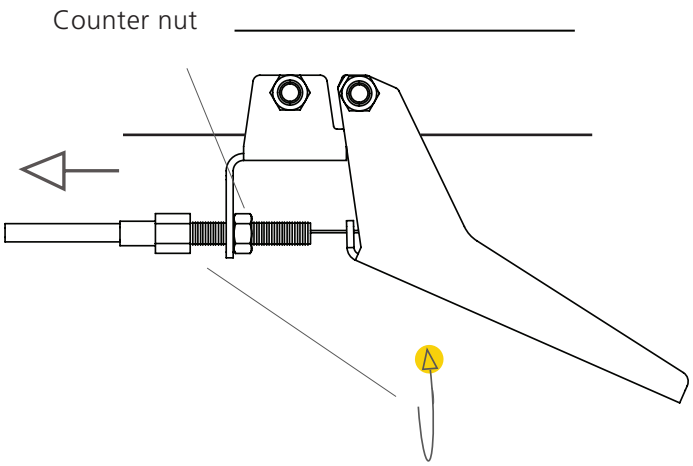

OTHER ADJUSTMENTS

Read all the adjustment instructions before beginning adjusting, and then follow the step-by-step instructions while adjusting.

The following instructions are crucial for a good operation of the sawmill, but the adjustments do not affect each other and do not have to be carried out in a particular order.

TRACK SWEEPERS

The saw carriage has track sweepers on its ends. It is important that you regularly check that they touch the rails.

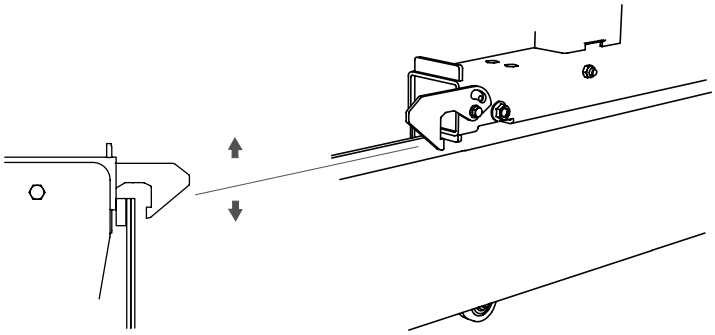

BLADE TENSION

Tension the blade by turning the T-handle clockwise. Read the blade tension scale, which is located inside the band wheel guards. Tension the blade until the red line is aligned with the two "arrows" in the opening for the blade tension spring.

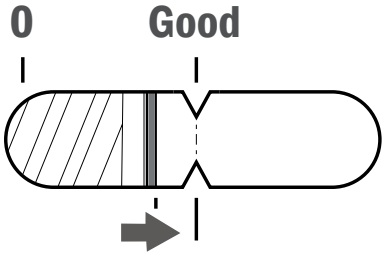

CHAIN TENSION

The crank handle chain has to be tensioned to ensure good functioning of the lifting mechanism. First, untighten the fixing bolt of the chain tensioner. Then, move the chain tensioner towards the chain until the chain is slightly tensioned. Tighten the bolting.

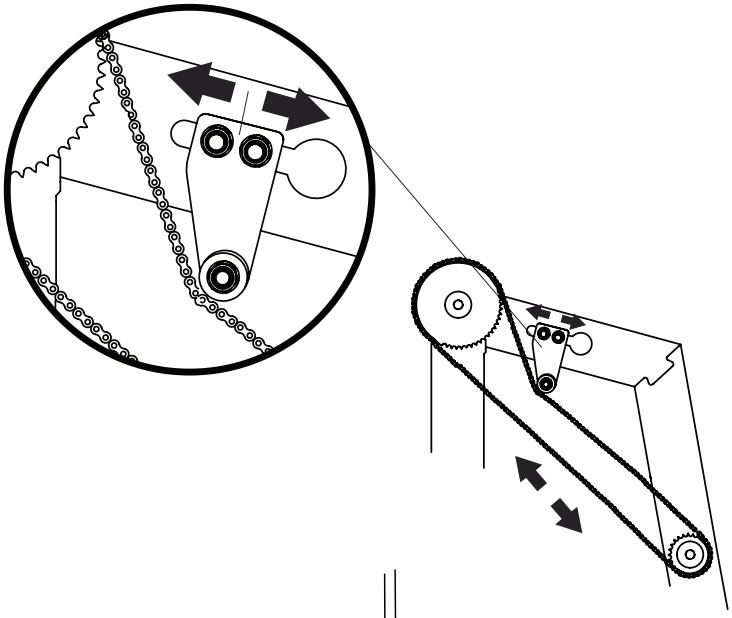

ADJUSTING THE SCALE

To ensure that the scale shows the correct measurement between the cross bunk and the blade, it has to be calibrated. Do as follows: Measure the vertical distance between the sawhead and a cross bunk. Note down the distance. Fit the magnetic scale to the scale plate so that the measurement indicated at the top side of the pointer is the same as the measurement you noted down.

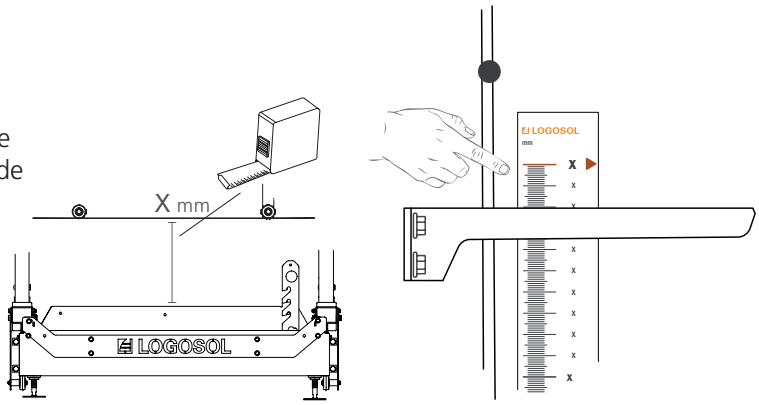

OTHER ADJUSTMENTS

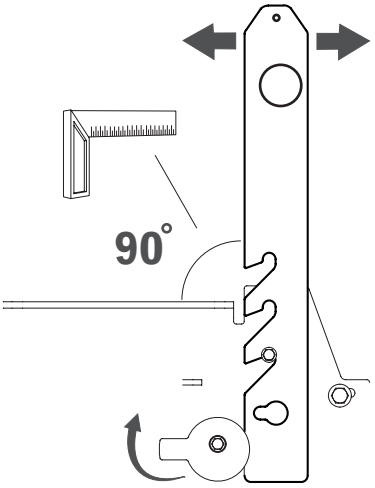

LOG SUPPORTS

To ensure good operation of the sawmill, it is important that the cross bunk and the log support are at right angles to each other. Adjust this by turning the adjusting handle located at the lower part of the log support. Check the angle with a set square.

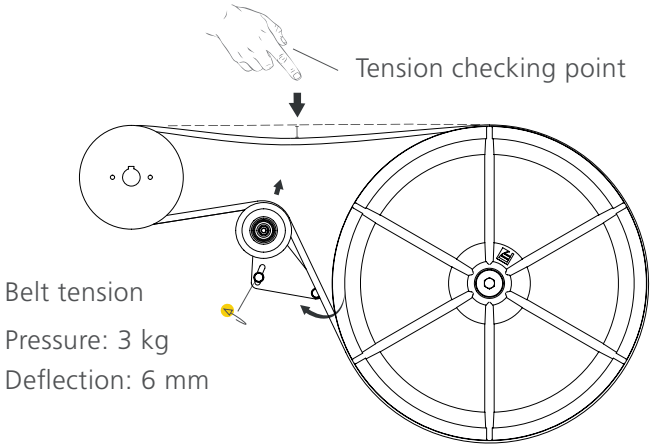

DRIVE BELT TENSION

To prevent the drive belt from slipping on the pulley, the drive belt has to be correctly tensioned. The belt tensioner pulley assembly can be rotated around its lower bolting. Tension the belt until you have reached the same values at the tension checking point as in the illustration to the right.

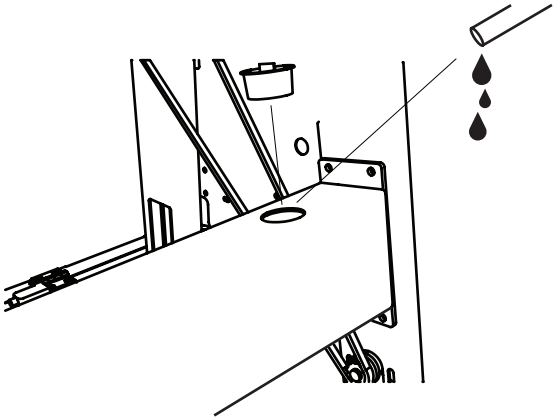

WATER TANK

The sawmill water tank has to be refilled before operation. Refill through the opening in the back of the saw carriage. The volume of the tank is 17 litres.

OTHER ADJUSTMENTS

PREPARING THE ENGINE BEFORE STARTING UP

Before starting the engine for the first time, the engine has to be filled with oil and fuel. Lower the sawhead to its lowest position to facilitate the work. More detailed information on the engine can be read in the user manual of the engine, which is included in the shipment.

Tip:

Work with the sawhead lowered to its lowest position to facilitate access to the engine.

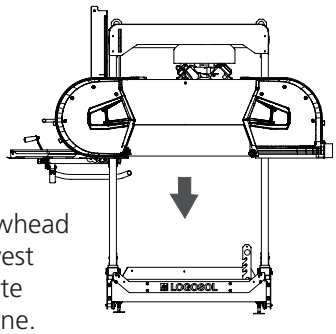

BLADE GUIDES

The blade guides tension the blade so that it comes 3 mm below the band wheels.

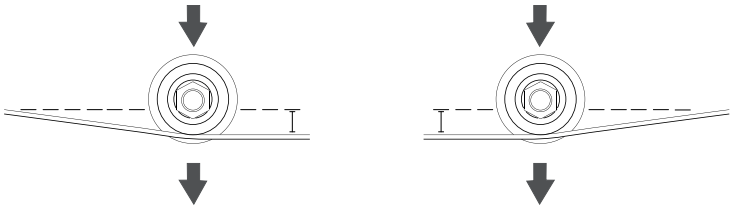

The blade guides can adjust the angle of the blade, measured in the direction of the cut, by adjusting the top and bottom adjusting bolts. The blade guides must be adjusted so that they are parallel to the back of the blade. This is done by adjusting the outer and inner adjusting bolts. It is crucial that the blade guides run parallel to the blade. Be careful to adjust this correctly.

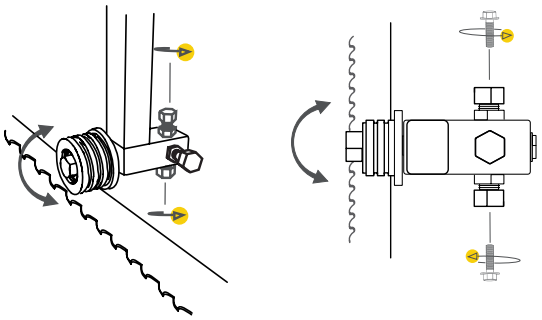

The blade guide can be adjusted inwards and outwards by pulling or pushing its shaft after the adjusting bolts have been loosened. The back of the blade should be approx. 3-5 mm from the rear edge of the blade guide roller.

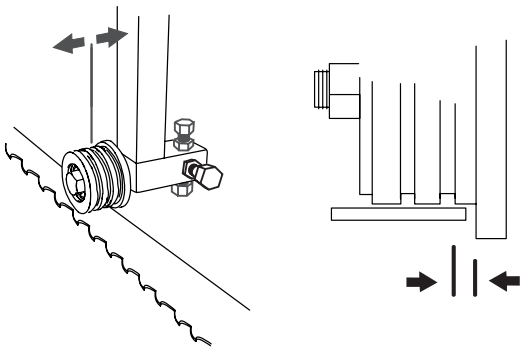

THE FUNCTIONS OF THE SAWMILL

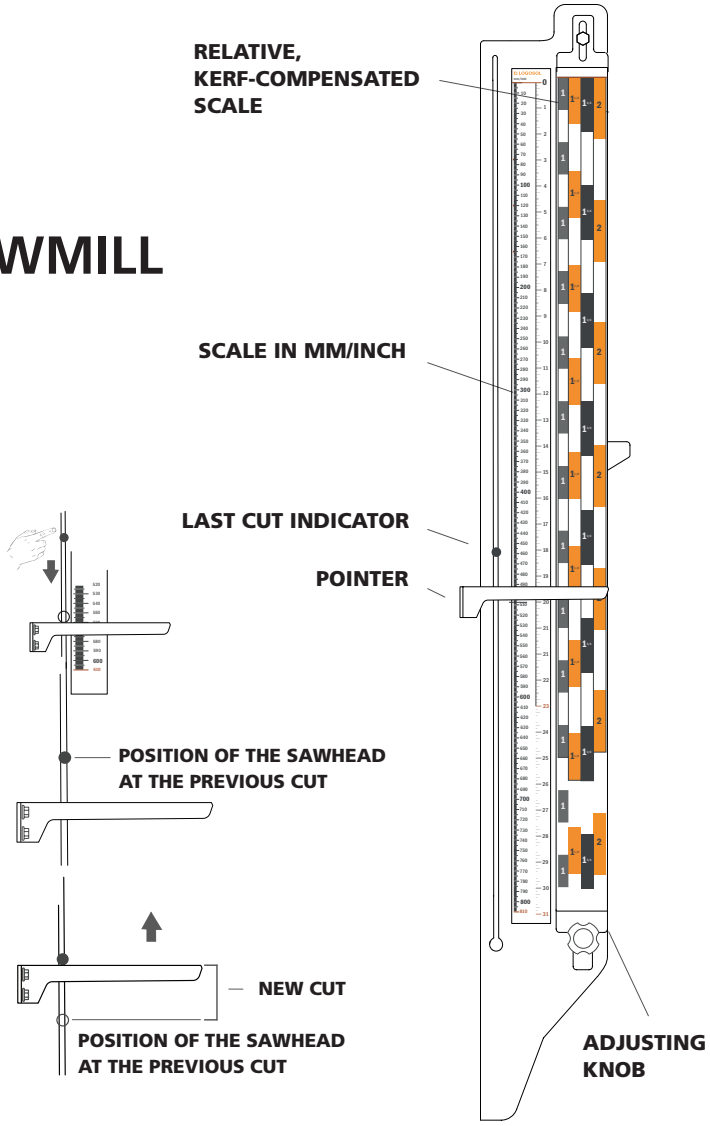

THE FUNCTIONS OF THE SCALES

The sawmill has two scales: one millimetre scale, which shows the distance between the cross bunk and the blade, and one kerfcompensated scale, which shows a number of different board thicknesses in inches. The kerf-compensated inch scale is adjusted by a knob located at the bottom of the scale. One additional feature is the Last Cut indicator, which helps you remember the position of the sawhead at the previous cut.

LAST CUT INDICATOR

To use the Last Cut function, push the indicator down until it rests on the pointer before starting to saw. When you raise the sawhead to return it for the next cut, the Last Cut indicator stays in that position. Then, when you lower the sawhead for the next cut, you have the Last Cut indicator as a reference showing the position of the previous cut.

PARKING LOCK

The sawmill is equipped with two catches that lock the saw carriage when it reaches one of the ends of the rails. To realese the parking lock you lift the catches with your foot before moving the saw carriage. On the rail end, the lock can be lifted so that it does not lock automatically by removing the screw that restricts the movement of the lock.

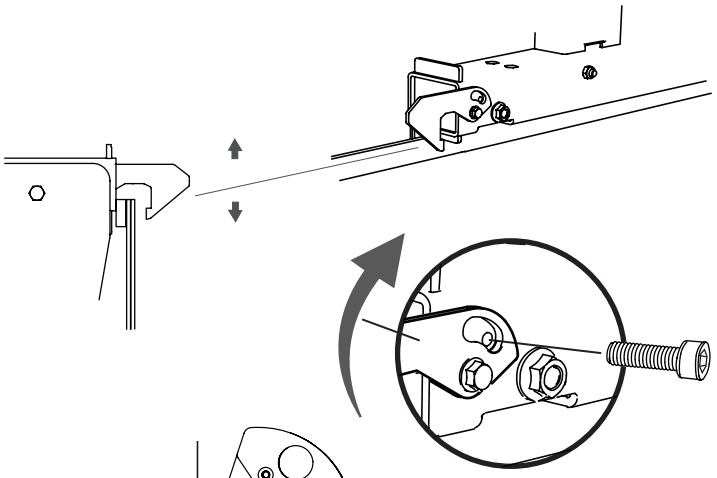

LOG CLAMPS

The sawmill comes with two log clamps that secure the log on the sawmill. The log clamp is an eccentric clamping device.

First, set the eccentric plate so that it lies against the log. This is done by turning the eccentric plate clockwise. Then, to secure the log, you turn the handle on the clamp clockwise, as shown in the illustration. To release the tension, carry out the steps in reverse order and turn the plate and the handle counter-clockwise.

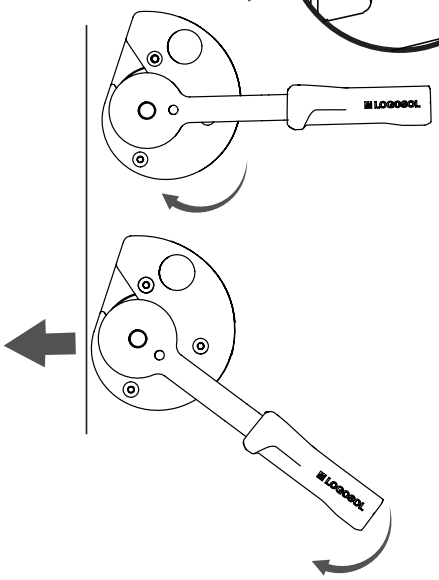

THE FUNCTIONS OF THE SAWMILL

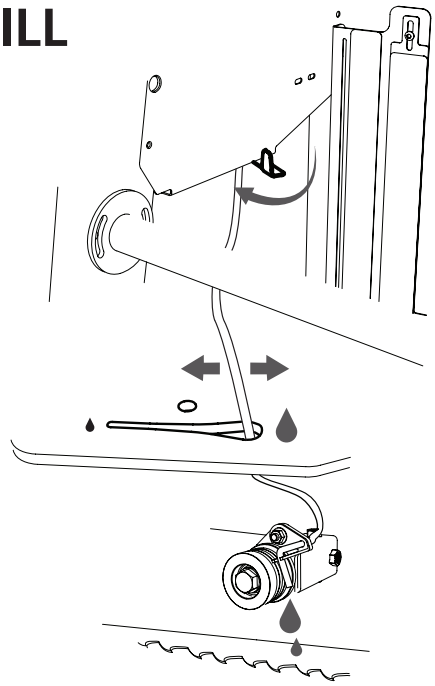

WATER COOLING

The water cooling of the blade is controlled by a lever located on the side plate at the operator side. In its starting position, the lever points at a right angle from the side plate. To release the water flow, the lever is pulled back. The flow of the water cooling is controlled by moving the cooling tube in the narrowing slot in the motor bracket. Move the tube inwards or outwards in the slot until you reach the desired cooling level.

WIRING DIAGRAM

WIRING DIAGRAM, EMERGENCY STOP / SAFETY SWITCH

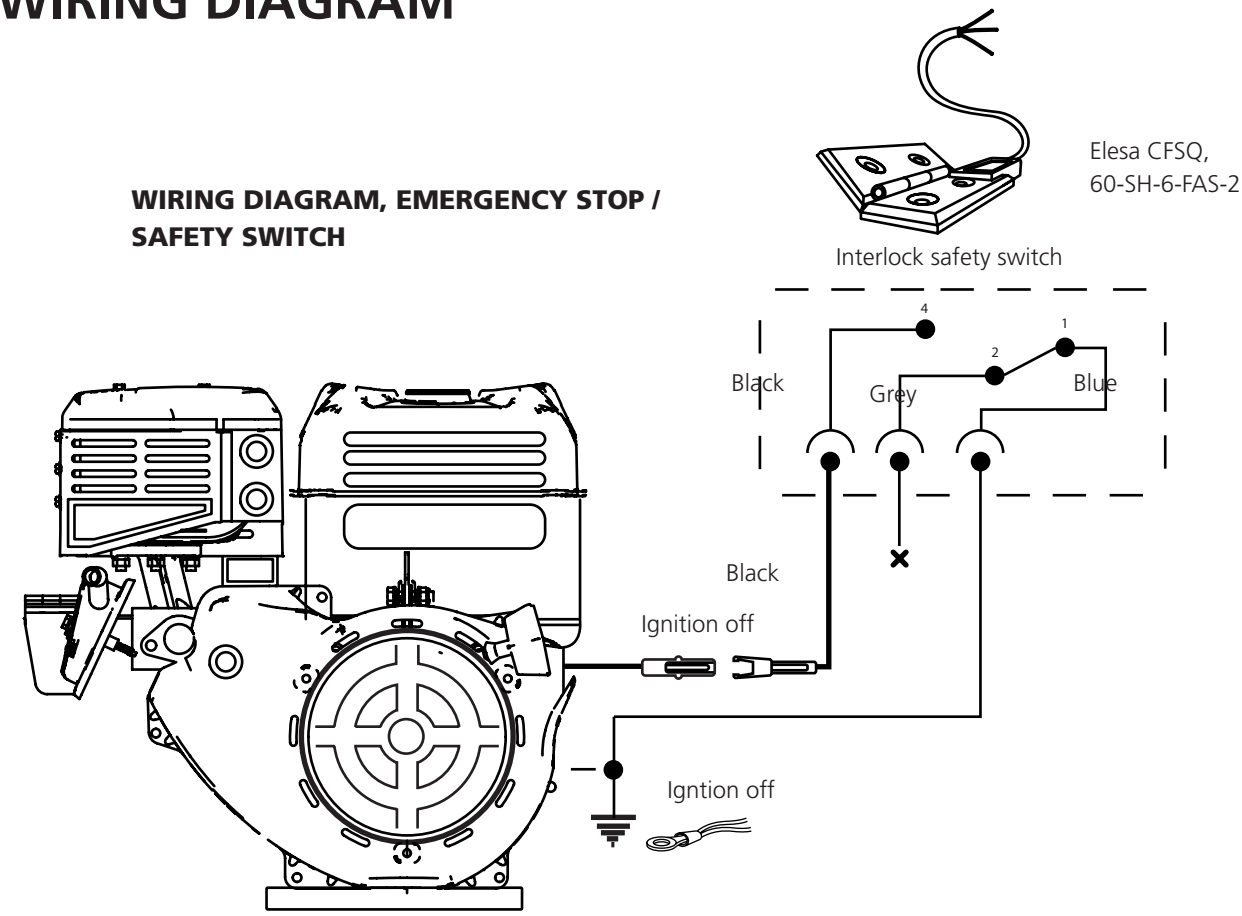

USING THE BAND SAWMILL

OPERATING THE BAND SAWMILL

WARNING! Cutting tools: Always stand behind the saw carriage and keep both your hands on the handles while operating the machine. Never stand in front of the carriage or band blade. Never pull the carriage through the cut.

WARNING! Risk of crush injury. Rotating parts: Even a slight force applied to the release mechanism of the sawhead can cause the sawhead to drop uncontrollably and make the crank rotate rapidly, which can cause serious injury.

WARNING! Never modify this machine in such a way that it no longer corresponds with the original design. Do not use it if it has been modified. Never use other attachments/ accessories than those recommended in this user manual.

WARNING! A broken band blade can be ejected out of the sawdust chute at high velocity.

During operation, make sure that nobody is on the side of the band sawmill where the sawdust chute is located. The risk of a blade breaking increases if it is not correctly installed or maintained.

The band blades and plastic parts of the sawmill are cold-resistant down to -25°C. Do not operate the band sawmill in colder temperatures than -25°C.

Ensure that the machine is correctly assembled and maintained in accordance with the instructions in this user manual.

Never work alone. Make sure that there are other adults within hearing distance, should you need to call for help.

WARNING! Danger of flying fragments from dirty logs.

Always inspect the logs so that there are no objects wedged in the bark before sawing.

Never stand between the pile of logs and the band sawmill. Always stand at the side of the pile of logs when handling the logs. Never stand where you are at risk of being hit by a rolling log.

Danger area of the machine:

Minimum safety distance around the sawmill is shown in *Illustration 1*. Note that the safety distance on the left side of the band sawmill is 15 m due to the the risk of blade pieces being ejected out of the sawdust chute if a blade breaks. On the other sides of the sawmill the safety distande is 5 m. [*Illustration 1*]

WARNING! Keep hands, limbs and other body parts well away from the band blade, cables and other moving parts.

WARNING! Risk of being crushed by the saw carriage.

Always use the parking lock when working with the saw carriage.

WARNING! Risk of tripping over the rails and cross bunks.

Never take a short cut across the rails. Hang electric cables up and out of the way so that they do not get damaged or become a tripping hazard.

WARNING! Never operate the petrol powered engine in enclosed areas. Ensure that there is good ventilation. The exhaust gases contain harmful substances that can pose a danger to life and health.

WARNING! Risk of being crushed between the sawmill and a moving log.

The log stack must always be secured with reliable straps around the logs (see the chapter *Operation Instructions*).

Never walk on the rails or the cross bunks.

USING THE BAND SAWMILL

Hard knots in the wood can cause a deviation in the result of the sawing.

Every time before operating the band sawmill:

Ensure that
- the operator is wearing the prescribed personal protective equipment
- the prescribed maintenance procedures have been properly carried out
- the band blade is not moving when the engine is idling
- the machine stands firmly and securely and the rails are supported along their full length
- the anti-tip wheels of the carriage and the rail end stops are properly installed
- everything on the band sawmill is properly and securely installed and in good working order
- all safety features on the band sawmill are properly and securely installed and in good working order
- the band blade is correctly installed, and that it rotates freely and in the right direction.

Before each cut:

Ensure that
- no other persons than the operator and no pets are within the danger area of the machine.
- the worksite is free of objects that can pose a tripping hazard or distract the operator.
- the band blade runs clear of the log supports and log clamps.
- the rails are free of debris, dirt, etc.
- the log is firmly secured.
- the adjustable blade guard has been correctly adjusted to manage the maximum width of the log.

When operating the band sawmill:

WARNING! Risk of burn injuries. The engine and its muffler get very hot during operation and remain hot a while after operation. This also applies to an idling engine.

WARNING! Risk of fire! Petrol and petrol vapours are extremely flammable. Be aware of the fire, explosion and inhalation risks involved.

The engine must be turned off and have been allowed to cool for 10 minutes before refueling.

Always turn the engine off when you are leaving the operating station, even just temporarily, e.g. to take care of sawn timber or do maintenance.

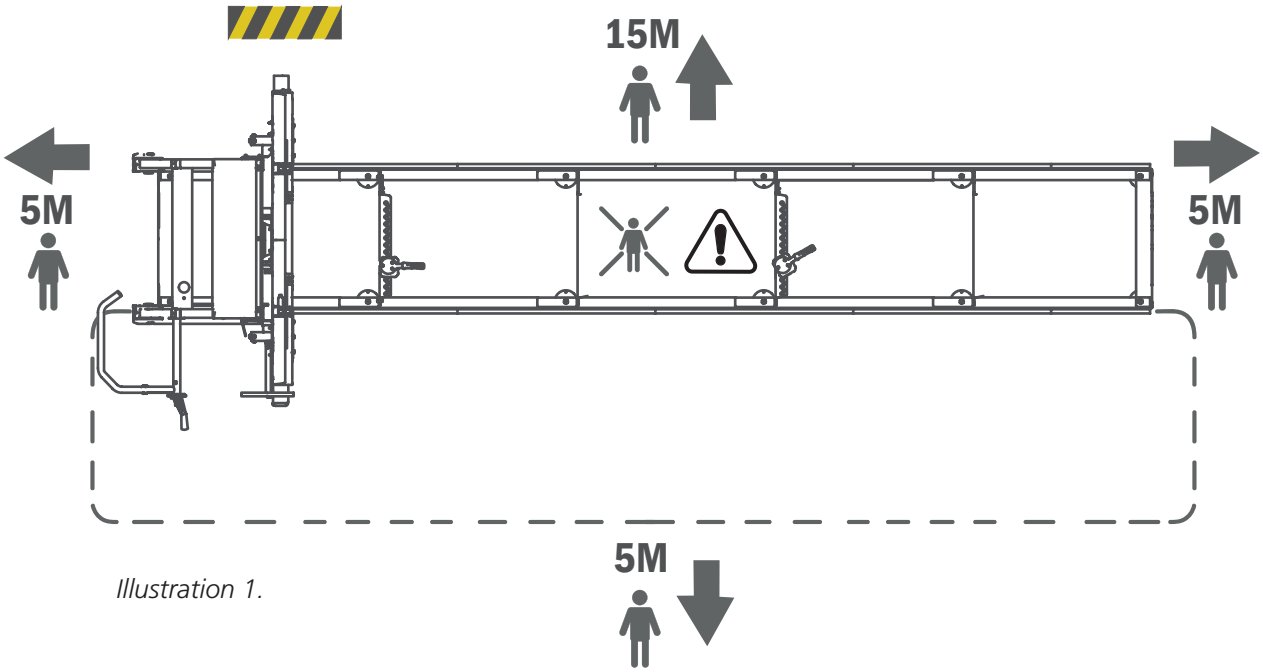

Illustration 1.

USING THE BAND SAWMILL

STORING

If the band sawmill is not in use, even when it is for short periods of time, the band blade must be removed from the machine and be stored where it is inaccessible to children and other persons.

For longer periods of storage:
- empty the fuel tank and the water tank,
- remove the band blade from the machine,
- close the fuel valve,
- secure the saw carriage to the bed.

Store the band sawmill where it is inaccessible to children and other persons, preferably in a locked location.

After very work session, release the tension on the blade to reduce wear.

MAINTENANCE

WARNING! Risk of serious injury.

Before performing any service and maintenance on the machine: turn the ignition key to the OFF position and close the fuel valve.

WARNING! Risk of burn injury. The engine and its muffler get very hot during operation and remain hot after the engine has stopped.

Allow the engine and the muffler to cool before you perform any service or maintenance on the machine.

MOVING THE BAND SAWMILL

WARNING! Risk of crush injuries.

Keep people and pets outside the 5 m danger area around the machine while lifting and moving the machine parts. Secure the load during transport.

The saw carriage and the rails/bed must not be lifted or transported when assembled together, but must be transported separately as two parts.

Lifting the saw carriage: Disconnect the carriage's anti-tip wheels, one on each side, and lift the carriage with the help of reliable lifting gear affixed to the lift rings located at the top of the carriage. Weight: see *Technical data*.

Lifting the rails/bed: Use a hand pallet truck or a forklift truck and lift under the rails. Place a protective layer of wood on the forks before lifting. Ensure that the rails are well balanced and secure the load to the lift forks before transport. Weight: see *Technical data*.

REFUELING

WARNING! Risk of burn injury. Petrol is an extremely flammable fluid.

Before refueling the engine of the machine, wait until the engine has cooled. Turn the ignition key to the OFF position and close the fuel valve.

Refueling: Lower the sawhead to its lowest position and have the saw carriage in its locked position at one of the rail ends before refueling. Use a funnel and try to avoid spilling.

SAWDUST MANAGEMENT

If the sawmill is used outdoors it can be operated without a chip extractor.

Make sure that you regularly remove sawdust that has accumulated around the machine, using a shovel e.g. If a chip extractor is connected, you need a capacity of at least 800m^3/h.

Exhaust hose: In case an exhaust hose is connected to the sawmill, it must have a spiral that can be grounded.

START & STOP INSTRUCTIONS: PETROL ENGINE

START

1. Open the fuel valve by moving the fuel control lever to the right until it reaches the position "ON".

2. To start a cold engine, move the choke control lever to closed position (the control lever in its left position). To start a hot engine, leave the choke control lever in its open position (the control lever in its right position).

3. Turn the ignition key to the "ON" position.

4. Gently pull the start handle until you feel some resistace and then pull firmly. Gently return the starter handle.

5. Give gas by squeezing the throttle handle all the way in to its end position. This brings the engine up to its operating speed and the band blade starts rotating.

6. If the choke is in its closed position, gradually move the control lever towards its open position as the enging gets hotter.

STOP

You stop the band blade by releasing the throttle on the push handle. The band blade will then slow down and stop, and the engine goes down to idle. Then, turn off the engine by turning the ignition key to the "OFF" position and close the fuel valve.

OPERATION INSTRUCTIONS

LOG STACK

Do not stack the logs higher than 1 m.

Logs that are soiled, sandy, muddy or dirty considerably shorten the life of the band blade and increase the risk of blade breakage. Avoid dragging the logs over the ground and try to keep the logs as clean as possible.

It can also be a good idea to separate different sorts of wood into different log stacks.

LOG TABLE

It is possible to load logs from both sides of the band sawmill. If the log stack is placed on the same side as the operator's side, the log stack must be secured before every occasion of sawing.

Build the log table so it is the same height as the cross bunks on the band sawmill. If the log table is placed on the left side of the band sawmill, it should end 10 cm from the band sawmill. If the log table is placed on the operator's side, it should end approx. 1 m from the band sawmill and you should use a removable ramp between the log table and the sawmill. Ensure that the rear of the log table has large wedges to prevent the logs from rolling off from it.

Ensure that the logs closest to the band sawmill are secured with heavy-duty straps so that they can not roll towards the sawmill while the sawmill is running. [*See illustration 2*]

LOADING LOGS

WARNING! Risk of crush injuries between log and band sawmill.

Always stand at the side of the log table when handling logs [*see illustration 3, area A*]

Avoid standing between the log table/log stack and the band sawmill. The log stack must always be secured with reliable straps when you are within area B [*see illustration 3*].

The logs should be rolled from the log table. Do not drop them onto the band sawmill.

When loading a log:

1. Position the saw carriage at its rearmost position on the rails (the 'home' position).

2. When loading the log from the operator's side, raise the log supports to their highest position. When loading the log from the left side of the band sawmill, the log supports have to be moved to the opposite side of the bed (the operator's side). Then, fit them in their highest position. When the log lies stably on the bed, refit the log supports to the left side of the band sawmill.

3. If you use a removable ramp, it should be built and positioned so that there is no gap between the log table and the band sawmill.

4. Untie the straps that secure the front of the log pile.

5. Roll out a log.

6. Retie the front logs with the straps.

7. Carefully roll the log up against the log supports. Use a log turner/rotator. Centre the log laterally over the log bed cross bunks.

8. Adjust the log supports so that they support the log, but will not come into contact with the band blade when you are sawing. Lock the log supports in position.

9. Adjust the log clamps so that they come in the same position as the log supports, but on the opposite side of the log. Adjust the height of the log clamps to secure the log. Ensure that the log clamps will not come into contact with the band blade when you are sawing.

OPERATION INSTRUCTIONS

ALT:1

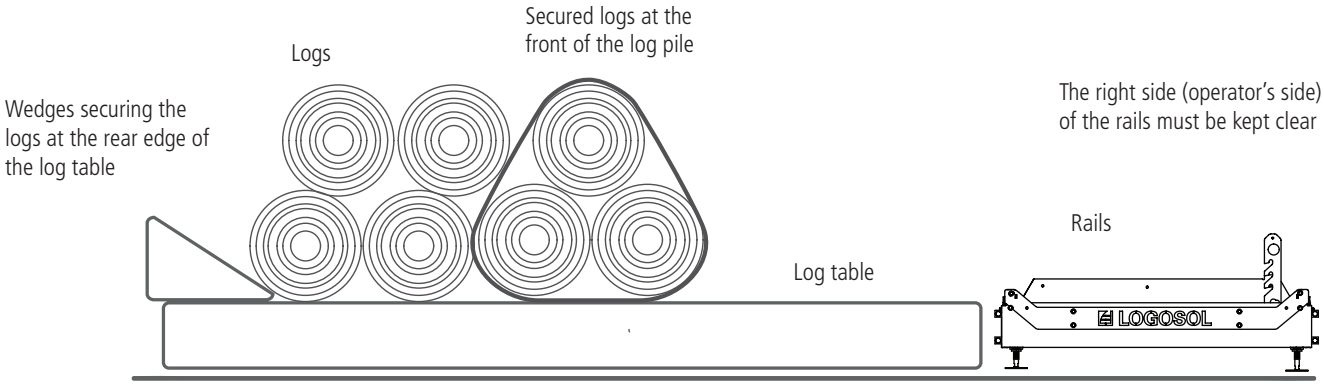

ALT:2

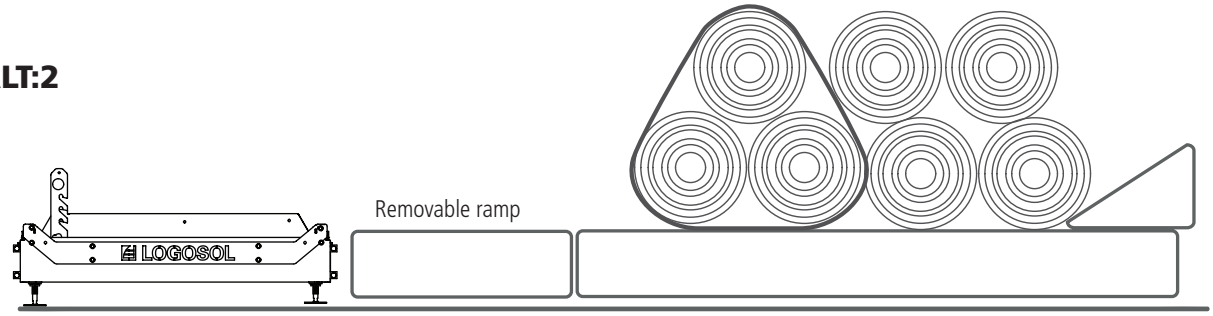

Illustration 2

Illustration 3

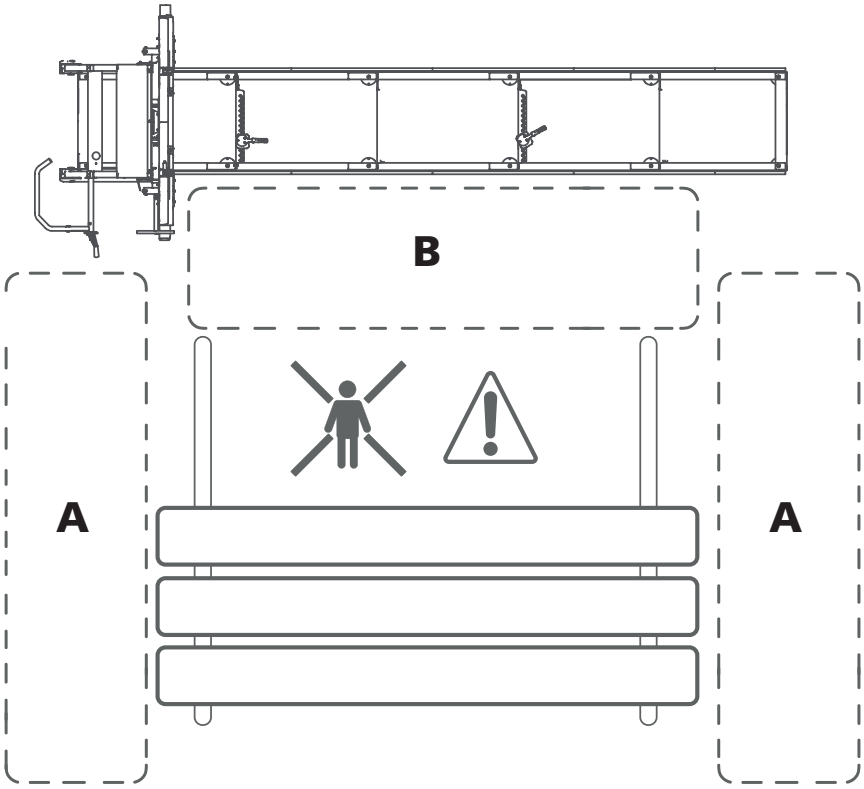

OPERATION INSTRUCTIONS

ADJUSTING THE CUT

You can adjust the position of the sawhead in steps to set the depth of cut. The band sawmill B1001 is equipped as standard with 1", 1 1/2", 1 3/4" and 2" scales with kerf compensation. The depth of cut is set by using the crank on the sawhead. Crank the sawhead down until the mark on the desired scale comes in level with the pointer.

SAWING

WARNING! Cutting tools:

Always stand behind the saw carriage and keep both hands on the push handle while operating the machine. Never stand in front of the saw carriage or blade. Never pull the saw carriage back through the cut.

WARNING! Read and follow all the safety instructions described in the chapter *Safety Instructions* under the section *Before each cut*.

1. Before operating the sawmill, perform all safety checks described in the chapter *Safety Instructions* under the section *Every time before operating the band sawmill*.

2. Raise the log supports by unhitching them, then lifting them to the desired height and locking them in place.

WARNING! Risk of pinching.

Watch your fingers when lowering the log supports. Make sure that the log supports are properly and securely fitted in their adjustment notches.

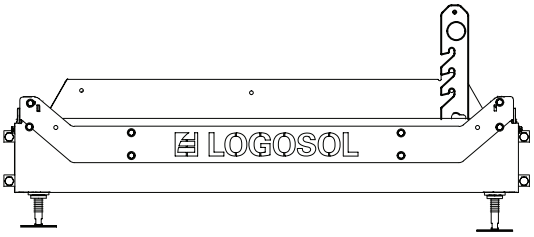

3. Use a log turner/rotator when rolling a log on the log bed. Centre the log on the log bed and roll it up against the log supports. Check the position of the log on the log bed. To be able to cut through the whole length of the log, the log should not protrude past the last cross bunk.

4. Rotate the log to a position that will give the best sawing yield.

5. If the log is distinctly tapered from one end to the other, you have to compensate for this to get the best possible result. You always want the cut to run parallel to the centre line of the log. Place a shim between the log bed cross bunk and the narrow end of the log.

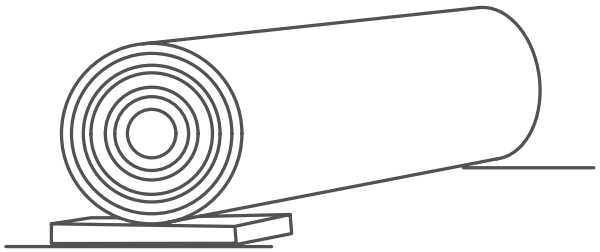

A shim placed under the narrow end of the log.

OPERATION INSTRUCTIONS

6. Secure the log with the log clamps. Adjust the height of the log clamps. Ensure that they will not come into contact with the blade when you are sawing.

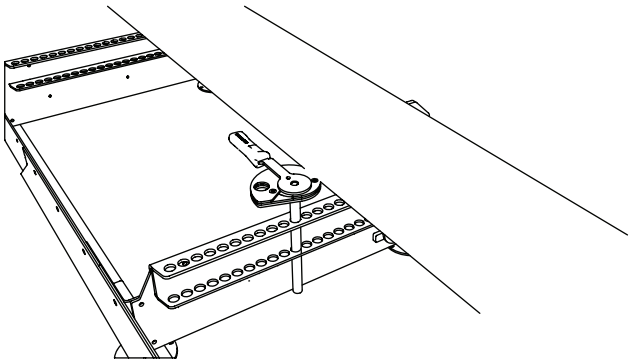

Log clamp. We recommend that you use two log clamps.

7. Set the height of the sawhead for the first cut by turning the crank that adjusts depth of cut. You raise the sawhead by turning the crank clockwise, while turning the crank counterclockwise will lower the sawhead.

8. Check that the blade will not come into contact with the log supports and log clamps.

9. Set the adjustable blade guard taking into account the widest part of the log.

10. Open the valve for blade cooling to provide a small trickle onto the blade guide roller/band blade.

11. Before each cut, perform all safety checks described in the chapter *Safety Instructions* under the section *Before each cut*.

12. Stand behind the push handle of the saw carriage and start the engine. Give gas by squeezing the throttle handle all the way in to its end position. This brings the engine up to its operating speed and the band wheels/blade start rotating.

13. With both hands on the push handle, gently push the saw carriage forward until the blade begins to cut into the log. When the band blade is completely inside the log, you can increase the feed rate. Adjust the feed rate so the cut becomes straight with a clean finish. Lower the feed rate when cutting through knots in the wood and choose a lower speed when cutting large or hard logs. Also lower the feed rate when you come to the end of the log.

14. As soon as you have sawn through the log, release the throttle handle and let the blade come to a complete stop. Tip: If you release the throttle just before the blade comes out through the log end, the blade will stop faster.

15. Remove the slab from the log.

16. Raise the sawhead slightly and, by hand, roll the saw carriage back to the starting position.

17. Set the height for the next cut. Use the crank and the depth of cut scales.

18. Rotate the log 180° so that the freshly sawn surface rests on the log bed.

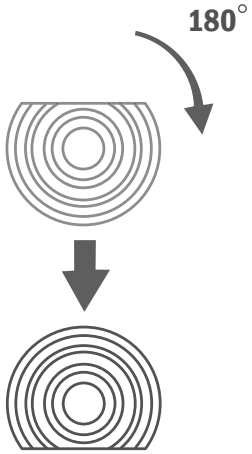

Rotate the log 180° so that the freshly sawn surface rests on the log bed

OPERATION INSTRUCTIONS

Lower the log supports and the log clamps so that they will not come into contact with the blade and clamp the log in position. Continue sawing until you reach the desired cant width.

Rotate the log 90° so that one of the freshly sawn sides rests flat against the log supports, and then clamp the log in position. Now you can make the third cut and then produce boards. Here, you may need to compensate for taper in the log. Lower the log support gradually and cut up the log with the bark facing down.

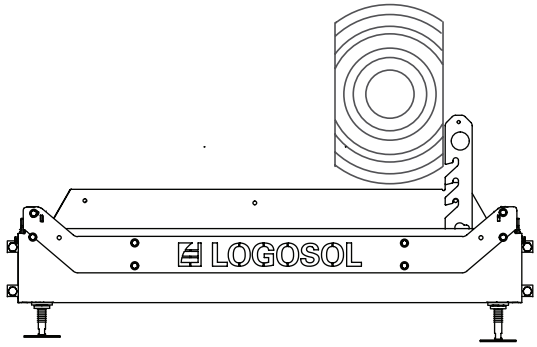

Rotate the log 90° so that one of the freshly sawn sides rests flat against the log supports, and then clamp the log in position.

19. When you have rotated the log the last time to cut the last boards, you have to calculate where you should take the cut to make the last cut agree with the calculation. Check this by lowering the blade until it rests against the log. Now you can read the absolute scale to see the amount of wood left under the blade. Set the sawhead to the desired height.

TIP: The easiest way is to wait to rotate the log until there only remains material for one 2" board. If you do so, there is no need for calculation.

HANDLING SAWN TIMBER

When cutting the cant into boards, you can either immediately lift the boards off the cant, or you can leave them there while cutting more boards before handling the timber.

When you are going to lift boards from the rails, ensure that the saw carriage is in its locked position at one of the rail ends. Then, move the sawn timber to a timber stack. Place spacers between the layers of boards to facilitate drying.

MAINTENANCE

MAINTENANCE

The regular maintenance that is expected to be performed by the operator, is described in this chapter. Be sure to perform the prescribed maintenance intervals as this forms the basis for a good functionality of the sawmill.

WARNING! Risk of serious injury:

Before performing any service or maintenance on the machine: turn the ignition key to the OFF position and close the fuel valve.

WARNING! Risk of lacerations:

Coiled band blades can unpredictably spring apart with considerable force. Handle coiled band blades with utmost care.

WARNING! Risk of fire:

Do not smoke or perform any work (welding, sharpening blades, etc.) on the band sawmill that can produce sparks or flames near the engine, fuel tanks, fuel or other flammable material.

If you spill fuel on the machine when refueling, wipe this up immediately. If you get any fuel on your clothes, change clothes immediately.

Never operate the engine if there is a fuel or oil leak. Always turn the engine off before refuelling.

MAINTENANCE

HANDLING BAND BLADES

WARNING! Cutting tools: Incorrect handling of band blades can cause life-threatening injuries. Band blades are extremely sharp.

WARNING! Risk of lacerations.

When handling band blades:

- always wear protective gloves (class 1) of leather
- always wear close-fittiing safety goggles or visor
- wear protective footwear with saw protection, steel toe cap and non-slip sole
- always wear full-length protective pants
- keep people and pets at a safe distance, at least 5 m away.

CHANGING BAND BLADES

It is crucial to change the blade regularly to ensure peak perfomance. Normally, you can saw 15-30 logs before changing blades, but this depends a lot on how clean the bark is. Using dull band blades will result in wavy or imprecise cuts, reduced blade life and greater risk of blade breakage. Always wear protective gloves when handling band blades.

To remove a band blade:

1. Release the tension on the blade by turning the T-handle counter-clockwise.

2. Open the band wheel guards.

3. Remove the blade from the band wheels.

To install a new band blade:

1. Fit the blade under the blade guides and then around the band wheels. Make sure that the saw teeth point towards you.

2. Rotate the band blade by hand in the direction of the cut to check that the blade still tracks straight. See the section *The lengthwise position of the blade* and *Adjusting the position of the blade*, on page 33.

3. Close the guards over the band wheels.

4. Lock the guards.

LUBRICATION POINTS

In order to keep the sawmill in good condition for many years, and to have a problem-free ownership, it is important to lubricate the sawmill components as describred below.

- Lubricate immediately after assembly, before starting to use the sawmill.
- Lubricate every 50 hours of operation, but at least once a year.

The lubricants you should use on your sawmill are:

- Superflo SKU: 9999-000-5115
- Universal oil SKU: 9999-000-5105
- Silicone SKU: 9999-000-5110
- Grease ISO-L-XCCIB2

The tube sections of the rail frame
Lubricant: Universal oil

Insert the spray can nozzle into all openings and spray the inside of the tube sections to protect against corrosion.

The top rail sections on which the saw bogie runs
Lubricant: Universal oil

The blade tensioning T-handle
Lubricant: grease or Superflo

Unscrew the T-handle and grease its threads generously.

The lifting chains and chain transmission of the sawhead
Lubricant: Superflo

Lubricate the whole chain.

The lift winch shaft
Lubricant: Superflo

Lubricate from the outside on both sides.

The throttle wire and handle of the engine
Lubricant: Superflo

Lubricate the handle joint and spray oil into the wire from its ends. If the wire is difficult to move, remove the wire from its coating and lubricate the whole wire and spray oil into the wire coating.

The legs of the saw bogie
Lubricant: Silicone

Lubricate the sliding surfaces of the sawhead and the plastic guides.

MAINTENANCE

CLEANING THE BAND SAWMILL

Clean the band sawmill after each work shift. Remove sawdust and wood debris inside the band wheel guards and on and around the rails. Wipe painted surfaces and plastic parts with silicone spray (ref. no: 9999-000-5110). Lubricate moving parts with Super Flo (ref. no: 9999-000-5115).

WATER TANK

If the temperature falls below freezing, you should empty the water tank and tubes. At temperatures below 0°C, you can use windshield washer fluid. Never use glycol or flammable liquids as a coolant.

HORIZONTAL ALIGNMENT OF THE BAND BLADE

Before each work shift, check that the blade is parallel with the log bed.

ENGINE

Check the oil level in the engine before each work shift. Follow the maintenance schedule in the user manual for the engine.

SAWHEAD LIFTING CHAINS

Inspect the sawhead lifting chains for any wear or damages. Replace with new chains if necessary.

INSPECTION OF SAFETY FEATURES

Before each work shift, inspect the working order of following safety features: Check that the throttle handle returns to its neutral position when released, so that the engine goes down to idle. If not, lubricate the throttle wire with Super Flo (SKU: 9999-000-5115). Check that the interlock safety switch in the hinge of the band wheel guards works. Check by opening the band wheel guards while the engine is turned off and listen for the safety switch disconnecting.

LEVEL ALIGNMENT OF THE RAILS

Before each work shift, check that the rails are level, especially in winter when frost can heave the ground.

BAND WHEEL BELTS

Regularly inspect the condition of the band wheel drive belt and the band wheel belt. Replace worn and damaged parts. Regularly check the tension of the drive belt and adjust if necessary.

BLADE GUIDES

Regularly inspect the condition of the blade guides and check that the distance between the flange on the blade guide and the blade is within 3-5 mm. Replace worn or damaged blade guides.

BAND WHEEL GUARDS

Every hour of operation, or when you change band blade, clean the inside of the band wheel guards and the blade from build-up of sawdust and wood debris.

BAND BLADES

Replace the blade with a new, sharp blade after approx. every two hours of efective sawing.

TROUBLESHOOTING

PROBLEM/SYMPTOM	PROBABLE CAUSE	SOLUTION
The blade quickly loses its sharpness	• Dirty logs • The blade is worn out	• Avoid dragging the logs over the ground. • Debark the log where the blade is going to cut. • Square the logs before cutting boards, to minimize the cuts into bark. • Replace the blade with a new one.
Wavy cuts	• Dull blade • The feed speed is too high • The feed speed is too low • Sawing through a partly frozen log	• Resharpen the blade. • Lower the feed speed. • Increase the feed speed. • Let the log fully thaw or fully freeze before sawing it. **TIP:** Do not use a slower sawing speed when the blade is entering the log, but cut into the log end with the same sawing speed you are planning to have for the rest of the cut.
The blade dives or rises when sawing	• Insufficient blade tension • The feed speed is too high • The blade is damaged • The blade does not track correctly on the band wheels	• Increase the blade tension. • Lower the feed speed. • Replace the blade with a new one. • Install the blade correctly and adjust the tracking.
Blade breakage	• The blade is worn out • Dull and/or incorrectly installed blade • The blade tension is too tight • The blade guide rollers are not aligned with the band wheels • Worn band wheel belts. This makes the blade running directly on metal	• Replace the blade with a new one. • Resharpen the blade. • Reduce the blade tension. • Adjust the blade guides. • Replace the belts on the band wheels with new ones
Uneven board thickness	• The log bed flexes due to insufficient support	• Support the rails/log bed as outlined in the instructions in this manual
The blade does not track correctly and slips off the band wheels	• The band wheels are incorrectly adjusted • Worn band wheel belts	• Adjust the band wheels as outlined in the instructions in this manual • Replace the belts with new ones
The blade does not cut	• The blade is installed backwards	• Remove the blade and turn the blade inside out and reinstall it. • When the sawmill is powered by an electric motor, check that the motor is running in the correct direction. If not: Reverse the phase of the electric motor.
The blade does not slacken after releasing the blade tension with the T-handle	• The blade tension assembly is sticking	• Push the T-handle inwards.
The sawhead is stiff when raised or lowered	• The vertical guides are too tight • The sawhead lifting winch drum is dry	• Lubricate with silicone and, if necessary, loosen them slightly. • Lubricate with Superflo.
The sawhead is rattling when going down	• The rails are not level and cause the saw bogie to twist	• Level the rails as outlined in the instructions in this manual.
The blade overheats during operation	• The water tank is empty • The water valve is closed	• Refill with water. • Open the water valve.
The engine does not start	• The ignition key is in the "OFF" position • The interlock safety switch on the blade guards is disconnected	• Turn the ignition key to the "ON" position. • Check the working order of the interlock safety switch.

EU declaration of conformity

In accordance with Directive 2006/42/EG, Annex 2A

Logosol AB
Arkivvägen 6
871 53 Härnösand

herewith declares that **Logosol B1001**

has been manufactured in conformity with the Machinery Directive 2006/42/EG
and the EMC Dierctive 2014/30/EU

and has been manufactured in conformity with the following harmonized standards:
EN ISO 12100:2010, EN 60204-1:2018,
EN 50370-1:2005, EN 50370-2:2003.

Notified body, 0404,RISE SMP Swedish Machinery Testing Institute AB, Box 7035, 750 07 Uppsala, Sweden, has executed EC type-examination according to Directive 2006/42/EG, article 12, paragraph 3b. The EC type examination certificate has the number: 0404/17/2408

The delivered band sawmill corresponds to the machine that was subject to EC type-examination.

Härnösand, 30 January 2026

Robert Berglund, CEO

LOGOSOL

Arkivvägen 6, SE-871 53 Härnösand
+46 (0)611-182 85 | info@logosol.com | www.logosol.com